Chugach School District Board Meeting

Monday, October 2, 2023 Work Session 10/2/23 Meeting 10/3/23
District Office & Teleconference, 9312 Vanguard Dr., Anchorage, AK 99507

1. **CALL TO ORDER**
2. **WORK SESSION October 2, 2023 1:00pm**
   a. Senior Presentations (4)
   b. Executive Session
   c. Board Calendar
   d. Stakeholder Survey Review
   e. Coming Soon (Deferred Compensation Plan Overview, Board Goals, Strategic Plan Review, AASB Training, Organizational Chart, Audit Report, Service Provider Approval).
   f. ECLC Update
3. **REGULAR MEETING October 3, 2023 9:00am**
4. **ROLL CALL & ESTABLISHMENT OF QUORUM**
5. **APPROVAL OF AGENDA**
6. **PLEDGE OF ALLEGIANCE**
7. **MISSION/VISION STATEMENT, LAND ACKNOWLEDGEMENT**
8. **APPROVAL OF MINUTES**
9. **INTRODUCTION OF GUESTS and/or ANNOUNCEMENTS**
10. **BOARD OF STARS**
11. **REPORTS & PRESENTATIONS**
    a. Chief School Administrator Report
    b. Communications
    c. EAC Reports
    d. Scholarship Committee Report
12. **PUBLIC COMMENT ON AGENDA ITEMS**
13. **BOARD COMMENT**
14. **ITEMS OF BUSINESS**
    a. 2023 FOCUS Vendors
    b. BUDGET (informational)
    c. CEE
    d. AASB RESOLUTIONS

    e. Carl Rose Governance Award
    f. AASB Policy Updates - First Reading
    g. FY24 Budget Adjustment
15. **OLD BUSINESS**
16. **NEXT BOARD MEETING (TBD) Nov 7/8?**
17. **ADJORNMENT**

DRAFT/TENTATIVE CSD Board Calendar of Events

- October: No Meeting, Elections
- November 7 / 8: Board Meeting in Anchorage (AASB training on 7th)
- November 9-12: AASB Boardsmanship Academy
- December 7: Board Meeting in Anchorage
- December 8-9: AASB School Law and Equity Day
- January: No Meeting, Zoom if needed
- February 8: Board Meeting
- February 10-13: AASB Fly-In (Juneau)
- March: ?
- April 19: Board Meeting
- April 20-21 AASB Spring Boardsmanship Academy
- May: ?

C.S.D. - TRAINING BUILDING

9312 Vanguard Drive — Anchorage, Alaska

65% SUBMITTAL

- MOA STAMP BLOCK -

NOT FOR CONSTRUCTION

DRAWING INDEX:

CIVIL
BELL
C4.0 SITE PLAN

LANDSCAPE
NOT USED

ARCHITECTURAL
ROHDE & ASSOCIATES, INC.
A0.8 DOOR, WINDOW, AND FINISH SCHEDULES
A1.0 FLOOR PLAN
A1.1 MEZZANINE PLAN
A1.2 ROOF PLAN
A2.0 BUILDING ELEVATIONS
A2.1 BUILDING ELEVATIONS
A3.0 BUILDING SECTIONS
A3.1 WALL SECTIONS
A3.2 STAIR AND ROOF DETAILS
A4.0 ASSEMBLIES AND DETAILS

STRUCTURAL
PND
S1.10 DESIGN CRITERIA
S1.11 SPECIAL INSPECTIONS
S1.21 CONCRETE REINFORCING SCHEDULES AND TYPICAL DETAILS
S1.31 MASONRY TYPICAL DETAILS
S1.41 WOOD FRAMING TYPICAL DETAILS
S1.42 WOOD PANEL SHEAR WALL TYPICAL DETAILS
S2.0 FOUNDATION PLAN
S2.1 SLAB PLAN
S2.2 MEZZANINE FRAMING PLAN
S2.3 ROOF FRAMING PLAN
S4.0 FOUNDATION DETAILS
S5.0 FLOOR DETAILS
S6.0 ROOF DETAILS

MECHANICAL
SPURLOCK & ASSOCIATES, INC.
M1.1 LEGENDS, ABBREVIATIONS, AND SCHEDULES
M1.2 MECHANICAL SCHEDULES
M2.0 UNDERGROUND PLUMBING PLAN
M2.1 PLUMBING PLAN
M3.1 HVAC PLAN

ELECTRICAL
EIC ENGINEERS
E0.1 ELECTRICAL LEGEND
E0.2 ELECTRICAL SPECIFICATIONS
E1.1 LIGHTING PLAN
E2.1 POWER AND SIGNAL PLAN
E3.1 ONE-LINE DIAGRAMS, DETAILS, AND SCHEDULES

PROJECT NARRATIVE:

The scope of work required by the general contractor (GC) and their subcontractors (SC) is as follows:

Any design work by the GC and their subcontractors shall be submitted and approved by the owner's representative, architect, engineers, and the Municipality of Anchorage prior to commencing with construction.

This project is the construction of a new detached building to provide additional and more diverse classroom spaces with the intent to expand the educational services provided to the students of the Chugach School District. The existing conditional use allows for the temporary boarding of up to 28 students, this number or conditional use will not change due to the scope of this project. However, will provide additional educational options to students who would not otherwise receive such an opportunities.

PROJECT DATA:

LEGAL DESCRIPTION:

LOT 2A, BLOCK 10
INDEPENDENCE PARK
SUBDIVISION

ADDRESS:

9312 VANGUARD DRIVE
ANCHORAGE, ALASKA

SITE LOCATION MAP:

NOT TO SCALE

PROJECT LOCATION

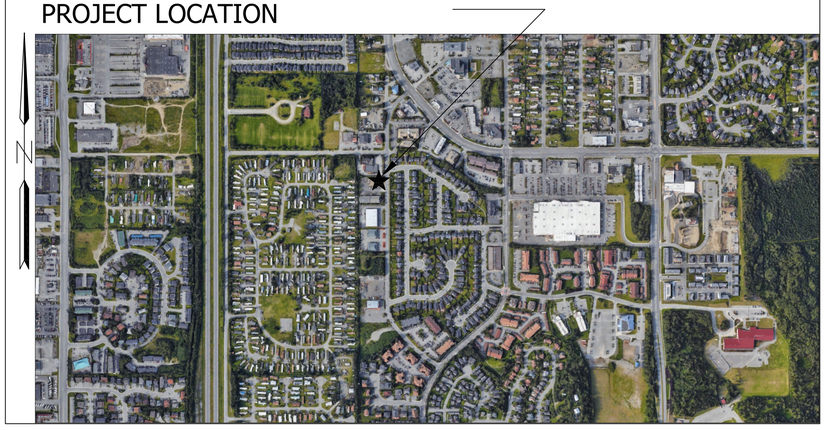

GENERAL NOTES:

1) BUILDING SHALL CONFORM TO INTERNATIONAL BUILDING CODE, 2018 EDITION, MINIMUM REQUIREMENTS FOR TYPE V-B CONSTRUCTION THROUGHOUT, "S-1" OCCUPANCY.
2) THESE DRAWINGS ARE SUPPLIED TO THE GENERAL CONTRACTOR AND OTHERS FOR THEIR USE ON THIS SPECIFIC PROJECT.
3) THE ORGANIZATION OF THESE DRAWINGS IS NOT INTENDED TO CONTROL THE DIVISION OF WORK AMONG THE SUB-CONTRACTORS. THE DIVISION OF THE WORK SHALL BE THE SOLE RESPONSIBILITY OF THE GENERAL CONTRACTOR.
4) CONTRACTOR SHALL PROVIDE ALL LABOR, EQUIPMENT AND MATERIALS REQUIRED TO COMPLETE ALL WORK AS SHOWN OR AS IMPLIED ON THESE DRAWINGS.
5) CONTRACTOR SHALL PROVIDE AND MAINTAIN ALL FACILITIES FOR LIGHT AND POWER WITHIN THE PREMISES AND IN THE CONSTRUCTION AREA DURING THE ENTIRE CONSTRUCTION PERIOD. POWER SHALL BE OBTAINED FROM THE EXISTING DISTRIBUTION SYSTEM. PROVIDE NECESSARY MATERIALS AND LABOR FOR POWER CONNECTIONS FOR MACHINES, PORTABLE TOOLS, ETC.. AS USED BY OTHER TRADES, REGARDLESS OF SIZE.
6) CONTRACTOR SHALL BE RESPONSIBLE FOR THE REMOVAL OF ALL RUBBISH AND DEBRIS RESULTING FROM CONSTRUCTION AT CONTRACTOR'S EXPENSE.
7) ALL DIMENSIONS ARE TO FACE OF STUD OR STRUCTURE, UNLESS NOTED OTHERWISE.
8) CONTRACTORS SHALL VERIFY ALL DIMENSIONS AND FIELD VERIFY CONDITIONS BEFORE PROCEEDING WITH ANY WORK.
9) ALL CONTRACTORS AND SUB CONTRACTORS ARE RESPONSIBLE FOR CONFORMING TO ALL APPLICABLE LOCAL CODES AND TRADE STANDARDS.
10) ALL COLORS, FINISHES, AND EQUIPMENT SHALL BE SUBMITTED TO THE OWNER FOR APPROVAL.
11) ANY AND ALL DISCREPANCIES BETWEEN DRAWING SHEETS, DISCIPLINES, DIMENSIONS, DETAILS, MATERIALS, AND COLORS SHALL BE BROUGHT TO THE ATTENTION OF THE ARCHITECT PRIOR TO BIDDING AND/ OR CONSTRUCTION IMMEDIATELY UPON DISCOVERY FOR CLARIFICATION.
12) DO NOT SCALE DIMENSIONS FROM BLUEPRINTS, ANY AND ALL DISCREPANCIES OF DIMENSIONS BETWEEN DRAWING SHEETS, DISCIPLINES, AND DETAILS SHALL BE BROUGHT TO THE ATTENTION OF THE ARCHITECT PRIOR TO CONSTRUCTION IMMEDIATELY UPON DISCOVERY FOR CLARIFICATION.
13) FIRE ALARM AND SPRINKLER DRAWINGS (IF REQUIRED) ARE NOT WITHIN THE SCOPE OF THESE DRAWINGS AND ARE THE RESPONSIBILITY OF THE GENERAL CONTRACTOR. SPRINKLER SYSTEM SHOP DRAWINGS SHALL BE SUBMITTED TO THE ARCHITECT FOR REVIEW AND APPROVAL PRIOR TO SUBMITTING FOR PERMIT. DRAWINGS SHALL BE SUBMITTED BY A QUALIFIED FIRE PROTECTION CONTRACTOR.

BUILDING CODE ANALYSIS:

THE 2018 EDITION OF THE IBC WAS USED IN THE FOLLOWING ANALYSIS:

PROJECT INFORMATION:	NEW CONSTRUCTION
ZONING:	I-1SL
CONSTRUCTION TYPE:	TYPE V-B : NON- SPRINKLED
OCCUPANCY CLASSIFICATION:	S-1
HEIGHT:	1-STORY, PER IBC 505.2
SPRINKLED:	NO
FIRE ALARM:	NONE REQUIRED PER IBC 907.2.1
ACTUAL AREA:	2,753 G.S.F. FIRST FLOOR 633 G.S.F. MEZZANINE
TOTAL:	3,386 G.S.F.
MEZZANINE AREA:	PER IBC 505.2.1, THE AGGREGATE AREA OF THE MEZZANINE IS ALLOWED TO BE A MAXIMUM OF 1/3 OF THE ROOM IN WHICH IT IS LOCATED: 2,753 / 3 = 918 S.F. ALLOWABLE MEZZANINE
ALLOWABLE TABULAR AREA:	6,000 S.F. PER STORY
OCCUPANCY SEPARATION:	NONE REQUIRED PER IBC TABLE 508.4
ROOFING CLASSIFICATION (MIN);	C
ROOFING CLASSIFICATION (PROVIDED):	A
EXT. WALL PROTECTION:	NONE REQUIRED PER IBC TABLE 601 AND 602
OCCUPANT LOAD:	MAIN FLOOR: VOCATIONAL SHOP AREA: 2,753 N.S.F./ 50 N.S.F. PER OCCUPANT =55 MAIN FLOOR TOTAL OCCUPANTS: 55 MEZZANINE: WAREHOUSE AREAS: 633 G.S.F./500 G.S.F. PER OCCUPANT = 2 OCC. TOTAL OCCUPANTS: 57
NUMBER OF EXITS:	2 REQUIRED, 3 PROVIDED
EMERGENCY LIGHTING:	PROVIDE MINIMUM 1 FOOT-CANDLE ILLUMINATION AT FLOOR LEVEL PER IBC SECTION 1006.2
INTERIOR FINISHES:	MINIMUM PER IBC TABLE 803.13
PLUMBING SYSTEMS (S-1 OCCUPANCY):	BATHROOMS ARE LOCATED IN EXISTING MAIN BUILDING
EXITING:	EVERY EXIT DOOR SHALL BE OPENABLE FROM THE INSIDE WITHOUT A KEY OR ANY SPECIAL KNOWLEDGE OR EFFORT.

IF THIS SHEET IS LESS THAN: 22"X34" IT IS A REDUCED PRINT
- DO NOT SCALE DIMENSIONS FROM BLUEPRINTS -

SYMBOLS:

- A / B — STRUCTURAL OR REFERENCE GRIDS
- N — REFERENCE NORTH
- 2 / A0.1 — EXTERIOR ELEVATION
- 2 / A0.1 — DETAIL REFERENCE
- CUT LINE
- 1 Floor Plan 1/8" = 1'-0" — DRAWING TITLE AND SCALE
- 1 — REVISION SYMBOL AND BUBBLE INDICATING AFFECTED AREA
- V2 — VERTICAL ASSEMBLY TYPE
- 108 — DOOR NUMBER
- A — WINDOW NUMBER
- H1 — HORIZONTAL ASSEMBLY TYPE
- 114'-8 ½" T.O.S. — EXISTING GRADE OR ELEVATION
- 107'-8 ½" — FINISHED GRADE OR ELEVATION

ABBREVIATIONS:

A.F.F.	ABOVE FINISHED FLOOR	DN	DOWN	G.S.A.	GROSS SQUARE FOOTAGE	N.I.C.	NOT IN CONTRACT	SL	SIDE LITE
A.C.T.	ACOUSTICAL CEILING TILE	EA	EACH	GYP	GYPSUM	NL	NO LITE	SPEC	SPECIFICATION
APPROX	APPROXIMATELY	E.W.	EACH WAY	GWB	GYPSUM WALL BOARD	N.S.F.	NET SQUARE FOOTAGE	SQ.FT.	SQUARE FOOT
ARCH	ARCHITECTURAL	EL.	ELEVATION	H.B.	HOSE BIB	N.T.S.	NOT TO SCALE	SV	SHEET VINYL
A.W.W.	ALL WEATHER WOOD	EXIST	EXISTING	HL	HALF LITE	NO.	NUMBER	THRU	THROUGH
B.F.F.	BELOW FINISHED FLOOR	EXP	EXPANSION	IN	INCH	O.C.	ON CENTER	T.I.	TENANT IMPROVEMENT
B.O.B.	BOTTOM OF BEAM	E.I.F.S.	EXTERIOR INSULATION & FINISH SYSTEM	IBC	INTERNATIONAL BUILDING CODE	OCC.	OCCUPANT(S)	T.O.B.	TOP OF BEARING
B.O.D.	BASIS OF DESIGN	F.O.C.	FACE OF CONCRETE	IEBC	INTERNATIONAL EXISTING BUILDING CODE	OPP	OPPOSITE	T.O.W.	TOP OF WALL
B.O.F.	BOTTOM OF FOOTER	F.O.F.	FACE OF FINISH	IECC	INTERNATIONAL ENERGY CONSERVATION CODE	ORD	OVERFLOW ROOF DRAIN	TS	TUBE STEEL
B.O.S.	BOTTOM OF STRUCTURE	F.O.S.	FACE OF STUDS	IFC	INTERNATIONAL FIRE CODE	O/H	OVERHEAD	TT	TYPICAL THROUGHOUT PROJECT
B.O.W.	BOTTOM OF WALL	F.O.W.	FACE OF WALL	IRC	INTERNATIONAL RESIDENTIAL CODE	PLAM	PLASTIC LAMINATE	TYP	TYPICAL
CL	CENTERLINE	F TO F	FACE TO FACE	LAV	LAVATORY	P.R.R.	PER RESTROOM	U.D.	UNIT DIMENSION
C TO C	CENTER TO CENTER	F.F.	FACTORY FINISH	LB	POUND	PSF	POUNDS PER SQUARE FOOT	U.N.O.	UNLESS NOTED OTHERWISE
CMU	CONCRETE MASONRY UNIT	F.E.	FIRE EXTINGUISHER	MFG	MANUFACTURER(ED)	RD	ROOF DRAIN	VCT	VINYL COMPOSITE TILE
CPT	CARPET	FIN	FINISH(ED)	MASS	MUNICIPALITY OF ANCHORAGE STANDARD SPECIFICATION	REF	REFERENCE	W.W.F.	WELDED WIRE FABRIC
CONT	CONTINUOUS	F.F.E.	FINISHED FLOOR ELEVATION	MAX	MAXIMUM	REQD	REQUIRED	W.W.M.	WELDED WIRE MESH
DEMO	DEMOLITION	F.D.	FLOOR DRAIN	MIN	MINIMUM	RM	ROOM	W/	WITH
DIA	DIAMETER	FL	FULL LITE	MISC	MISCELLANEOUS	R.O.	ROUGH OPENING	W/O	WITHOUT
ø	DIAMETER	FT.	FOOT	M.O.A.	MUNICIPALITY OF ANCHORAGE	S.F.	SQUARE FOOT	WOC	WALK-OFF CARPET
DIM	DIMENSION	F.V.	FIELD VERIFY	N.A.	NOT APPLICABLE	SIM	SIMILAR		

ROHDE ARCHITECTS
Architecture Planning Design/Build
11925 Old Glenn Hwy., Suite 201, Eagle River, AK 99577
PH. (907) 331-3111
ARohde@RohdeArchitects.Com

NO.	REVISION	DATE

C.S.D. - TRAINING OFFICE
9312 VANGUARD DRIVE
Anchorage, Alaska

JOB NO.	2317
DATE	JULY 21, 2023
DRAWN	GLM
REVIEWED	AGR

SHEET TITLE:
COVER SHEET

SHEET NO.
G1.0

FileName: \\192.168.1.5\Share\Rohde and Associates\Drawings\Active Jobs\2317 Chugach School District\A-Sheets_JN2312.dwg
Plotted on: Thursday, August 17, 2023 - 2:38pm
UserName: Rohde

FileName: V:\OPS\2023-2952 CSD Training Office Civil-Plat\civil3D\2 - Working\2023-08-08 Chugach School District_CIVIL.dwg
Plotted on: Tuesday, August 08, 2023 - 3:10pm
UserName: vsantiago

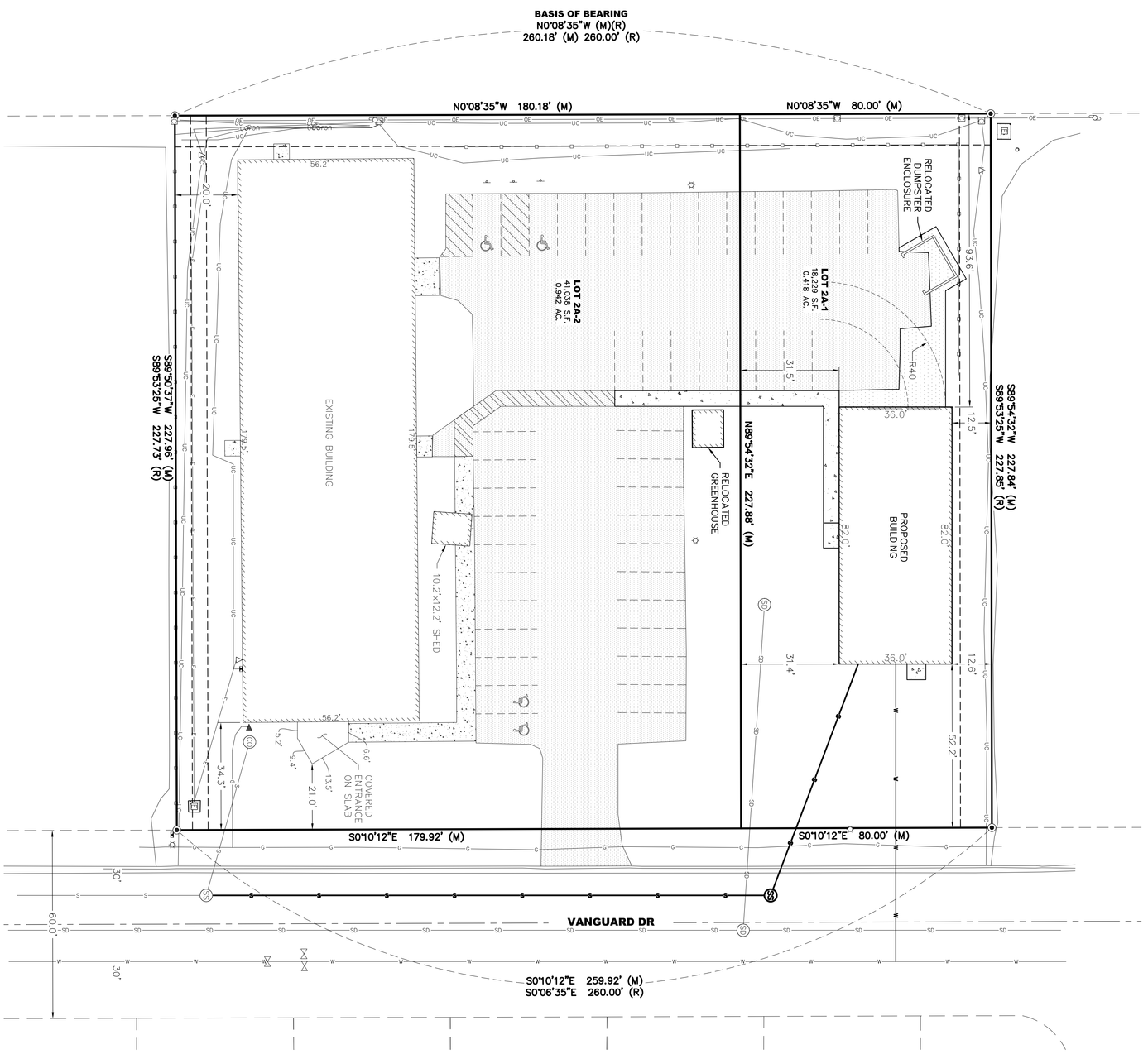

SITE PLAN

SCALE 1:20



LEGEND

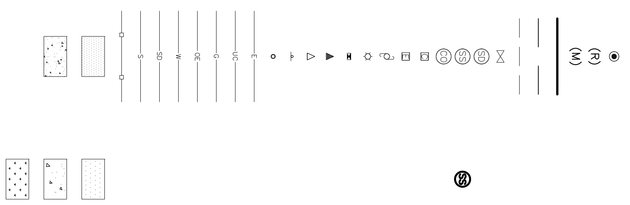

EXISTING

- FOUND YELLOW PLASTIC CAP
- RECORD PER PLAT 84-87 (R)
- MEASURED (M)
- LOT LINE
- ADJACENT LOT LINE
- EASEMENT LINE
- WATER VALVE
- STORM DRAIN MANHOLE
- SANITARY SEWER MANHOLE
- SANITARY SEWER CLEANOUT
- COMMUNICATIONS PEDESTAL
- ELECTRIC TRANSFORMER BOX
- UTILITY POLE
- LIGHT POLE
- JUNCTION BOX
- GAS METER
- ELECTRIC METER
- SIGN
- BOLLARD
- UNDERGROUND ELECTRIC
- UNDERGROUND COMMUNICATIONS
- UNDERGROUND GAS
- OVERHEAD ELECTRIC
- WATER LINE
- STORM DRAIN LINE
- SANITARY SEWER LINE
- WOOD FENCE
- PAVEMENT
- CONCRETE
- LANDSCAPING

PROPOSED

IF THIS SHEET IS LESS THAN 22"X34" IT IS A REDUCED PRINT
- DO NOT SCALE DIMENSIONS FROM BLUEPRINTS -

engineers surveyors bell
801 W. FIREWEED LN. #201
ANCHORAGE, AK 99503
(907)274-5257
CoA No. AECC582

SHEET NO. C4.0

SHEET TITLE: SITE PLAN

JOB NO. 2023-2952
DATE AUGUST 8, 2023
DRAWN VFS
REVIEWED CLB

C.S.D. - TRAINING OFFICE

9312 Vanguard Drive Anchorage, Alaska

ROHDE ARCHITECTS
Architecture Planning Design/Build
11925 Old Glenn Hwy., Suite 201, Eagle River, AK 99577
ph. (907)696-2960 fax (907)696-2962
ARohde@RohdeArchitects.Com Corp. Auth. #AECC769

NO.	REVISION	DATE

1" ACTUAL

THIS SHEET IS FULL SIZE AT 34"x22"

DOOR SCHEDULE

Mark	Width	Height	Thickness	Material	Finish	Lite	Rating	Frame Type	Frame Finish	Hardware	Comments
100OH	10' - 0"	8' - 0"	0' - 2"								
101OH	10' - 0"	8' - 0"	0' - 2"								
102	3' - 0"	7' - 0"	0' - 1 3/4"								
103	3' - 0"	7' - 0"	0' - 1 3/4"								
104	6' - 0"	7' - 0"									

Room Schedule

Number	Name	Area	Floor Finish	Wall Finish	Ceiling Finish	Ceiling Height	Comments
1	TEAM BUILD + CREATE SPACE	2753 SF					
2	MEZZANINE	633 SF					

WINDOW SCHEDULE

Type Mark	Locate	Width	Height	Window Type	Head Height	Sill Height	Frame	Comments
A		6' - 0"	4' - 0"		7' - 0"	3' - 0"		
A		6' - 0"	4' - 0"		7' - 0"	3' - 0"		
A		6' - 0"	4' - 0"		7' - 0"	3' - 0"		
A		6' - 0"	4' - 0"		7' - 0"	3' - 0"		
A		6' - 0"	4' - 0"		7' - 0"	3' - 0"		
A		6' - 0"	4' - 0"		7' - 0"	3' - 0"		
A		6' - 0"	4' - 0"		7' - 0"	3' - 0"		
B		6' - 0"	2' - 6"		8' - 0"	5' - 6"		
B		6' - 0"	2' - 6"		8' - 0"	5' - 6"		
B		6' - 0"	2' - 6"		8' - 0"	5' - 6"		
B		6' - 0"	2' - 6"		8' - 0"	5' - 6"		

8/17/2023 2:53:33 PM \\192.168.1.5\Share\Rohde and Associates\Drawings\Active Jobs\2317 Chugach School District\2317 Chugach S.D Training Office.rvt

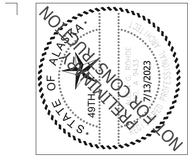

ROHDE ARCHITECTS
Architecture Planning Design/Build
11925 Old Glenn Hwy., Suite 201, Eagle River, AK 99577
Ph. (907)694-2360
ARohde@RohdeArchitects.Com Corp. Auth. #AECC769

NO.	REVISION

C.S.D. - TRAINING BUILDING
9312 Vanguard Drive, Anchorage, Alaska

JOB NO.	2317
DATE	7/13/2023
DRAWN	GLM
REVIEWED	AGR

SHEET TITLE:
DOOR, WINDOW, AND FINISH SCHEDULES

SHEET NO.
A0.8

65% SUBMITTAL

IF THIS SHEET IS LESS THAN: 22"X34" IT IS A REDUCED PRINT
- DO NOT SCALE DIMENSIONS FROM BLUEPRINTS -

THIS SHEET IS FULL SIZE AT 34"x22"

1" ACTUAL

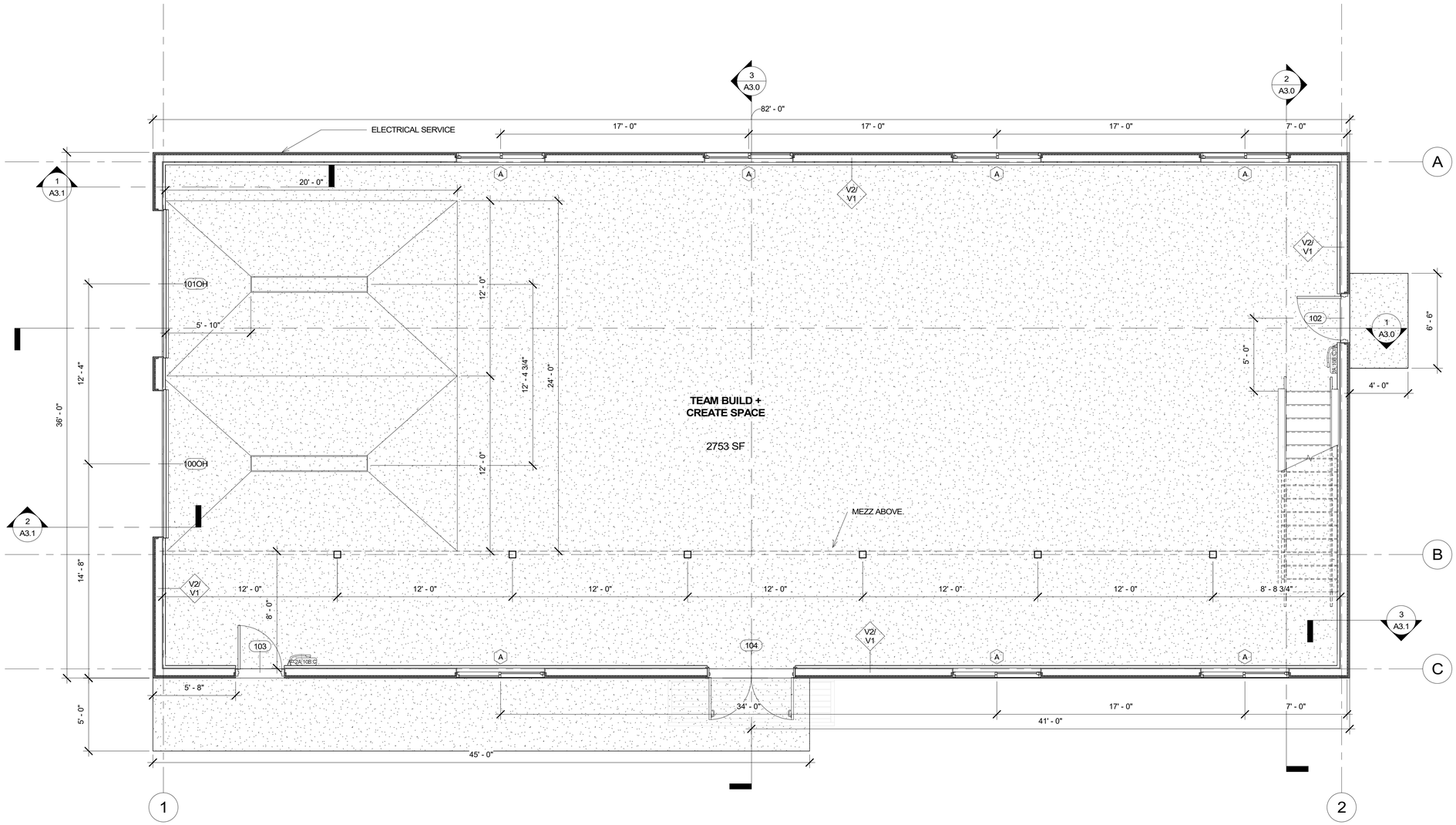

1 MAIN FLOOR PLAN
1/4" = 1'-0"

STATE OF ALASKA
49TH
PRELIMINARY
NOT FOR CONSTRUCTION
7/13/2023

ROHDE ARCHITECTS
Architecture Planning Design/Build
11925 Old Glenn Hwy., Suite 201, Eagle River, AK 99577
ph. (907)696-2960
ARohde@RohdeArchitects.Com Corp. Auth. #AECC769

NO.	REVISION

C.S.D. - TRAINING BUILDING
9312 Vanguard Drive, Anchorage, Alaska

JOB NO.	2317
DATE	7/13/2023
DRAWN	GLM
REVIEWED	AGR

SHEET TITLE:
MAIN FLOOR PLAN

SHEET NO.
A1.0

65% SUBMITTAL

IF THIS SHEET IS LESS THAN: 22"X34" IT IS A REDUCED PRINT
- DO NOT SCALE DIMENSIONS FROM BLUEPRINTS -

8/17/2023 2:40:35 PM \\192.168.1.5\Share\Rohde and Associates\Drawings\Active Jobs\2317 Chugach School District\2317 Chugach S.D.Training Office.rvt

THIS SHEET IS FULL SIZE AT 34"x22"

1" ACTUAL

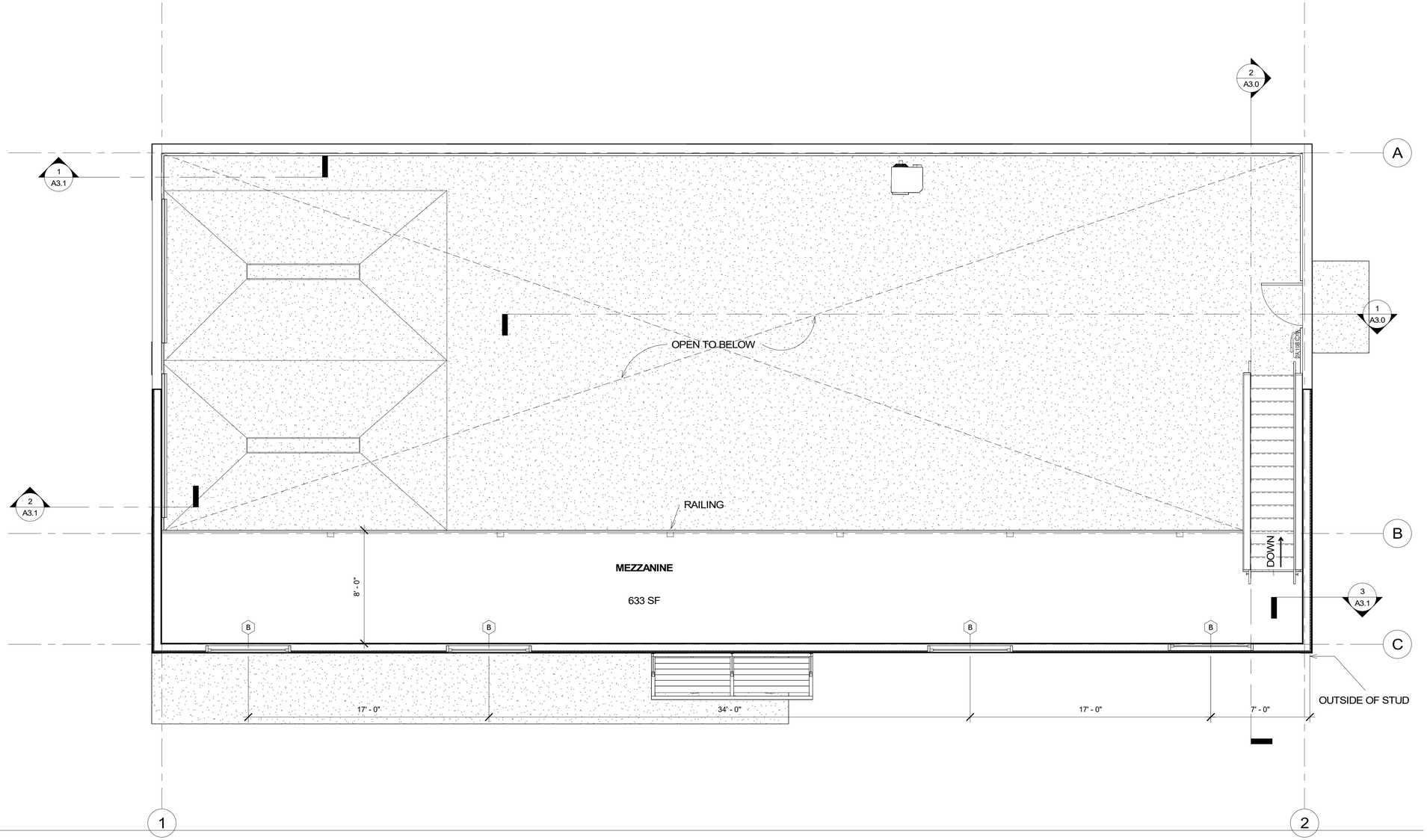

1 MEZZANINE PLAN
1/4" = 1'-0"

65% SUBMITTAL

IF THIS SHEET IS LESS THAN: 22"X34" IT IS A REDUCED PRINT
- DO NOT SCALE DIMENSIONS FROM BLUEPRINTS -

STATE OF ALASKA
49TH
PRELIMINARY
NOT FOR CONSTRUCTION
7/13/2023

ROHDE ARCHITECTS
Architecture Planning Design/Build
11925 Old Glenn Hwy., Suite 201, Eagle River, AK 99577
ph. (907)696-2960
ARohde@RohdeArchitects.Com Corp. Auth. #AECC769

NO.	REVISION

C.S.D. - TRAINING BUILDING
9312 Vanguard Drive, Anchorage, Alaska

JOB NO.	2317
DATE	7/13/2023
DRAWN	GLM
REVIEWED	AGR

SHEET TITLE:
MEZZANINE PLANS

SHEET NO.
A1.1

8/17/2023 2:40:47 PM \\192.168.1.5\Share\Rohde and Associates\Drawings\Active Jobs\2317 Chugach School District\2317 Chugach S.D.Training Office.rvt

THIS SHEET IS FULL SIZE AT 34"x22"

1" ACTUAL

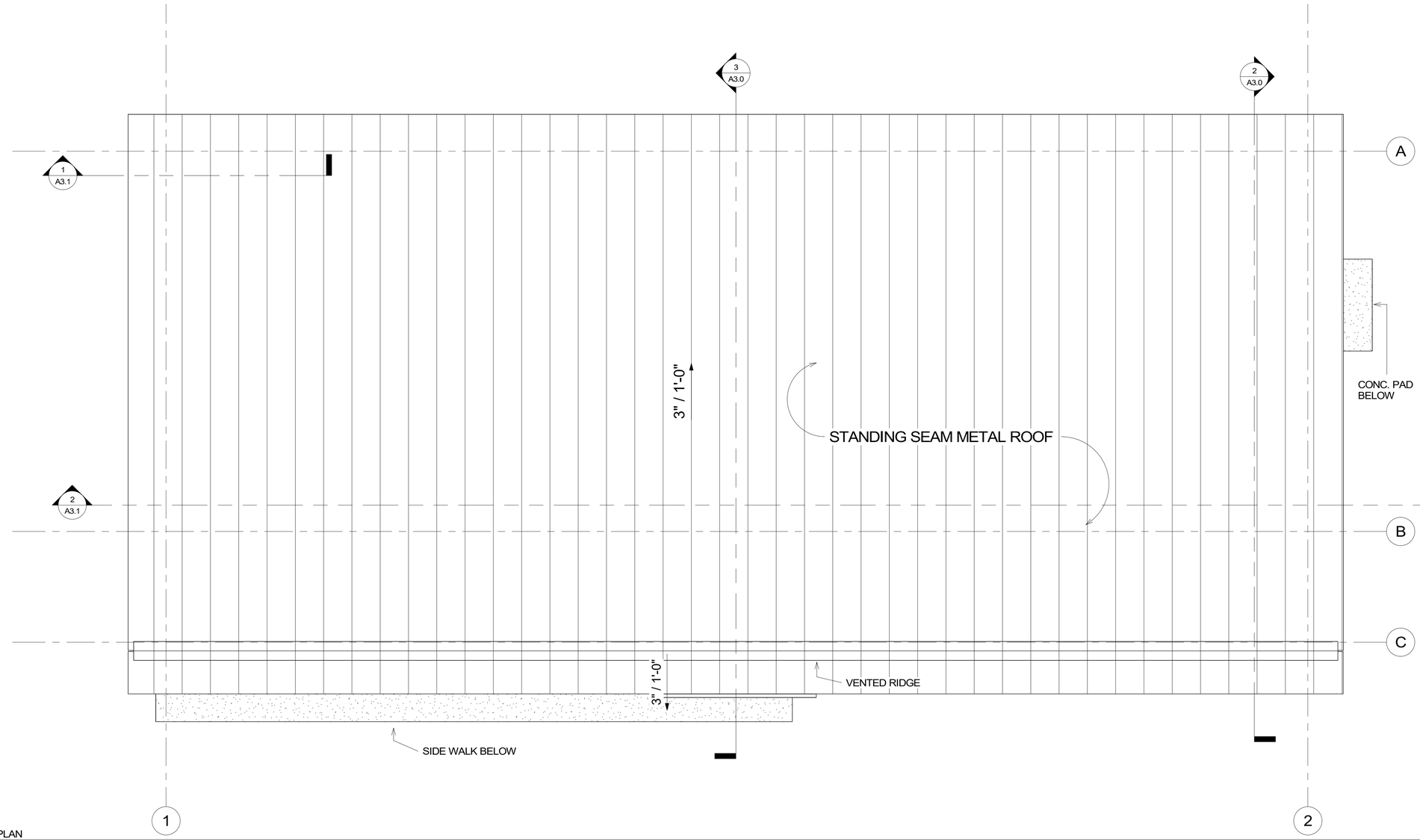

1 ROOF PLAN
1/4" = 1'-0"

NOT FOR CONSTRUCTION
PRELIMINARY
STATE OF ALASKA
49TH
7/13/2023

ROHDE ARCHITECTS
Architecture Planning Design/Build
11925 Old Glenn Hwy., Suite 201, Eagle River, AK 99577
Ph. (907)696-2360
ARohde@RohdeArchitects.Com Corp. Auth. #AECC769

NO.	REVISION

C.S.D. - TRAINING BUILDING
9312 Vanguard Drive, Anchorage, Alaska

JOB NO.	2317
DATE	7/13/2023
DRAWN	GLM
REVIEWED	AGR

SHEET TITLE:
ROOF PLAN

SHEET NO.
A1.2

65% SUBMITTAL

IF THIS SHEET IS LESS THAN: 22"X34" IT IS A REDUCED PRINT
- DO NOT SCALE DIMENSIONS FROM BLUEPRINTS -

8/17/2023 2:40:49 PM \\192.168.1.5\Share\Rohde and Associates\Drawings\Active Jobs\2317 Chugach School District\2317 Chugach S.D.Training Office.rvt

THIS SHEET IS FULL SIZE AT 34"x22"

1" ACTUAL

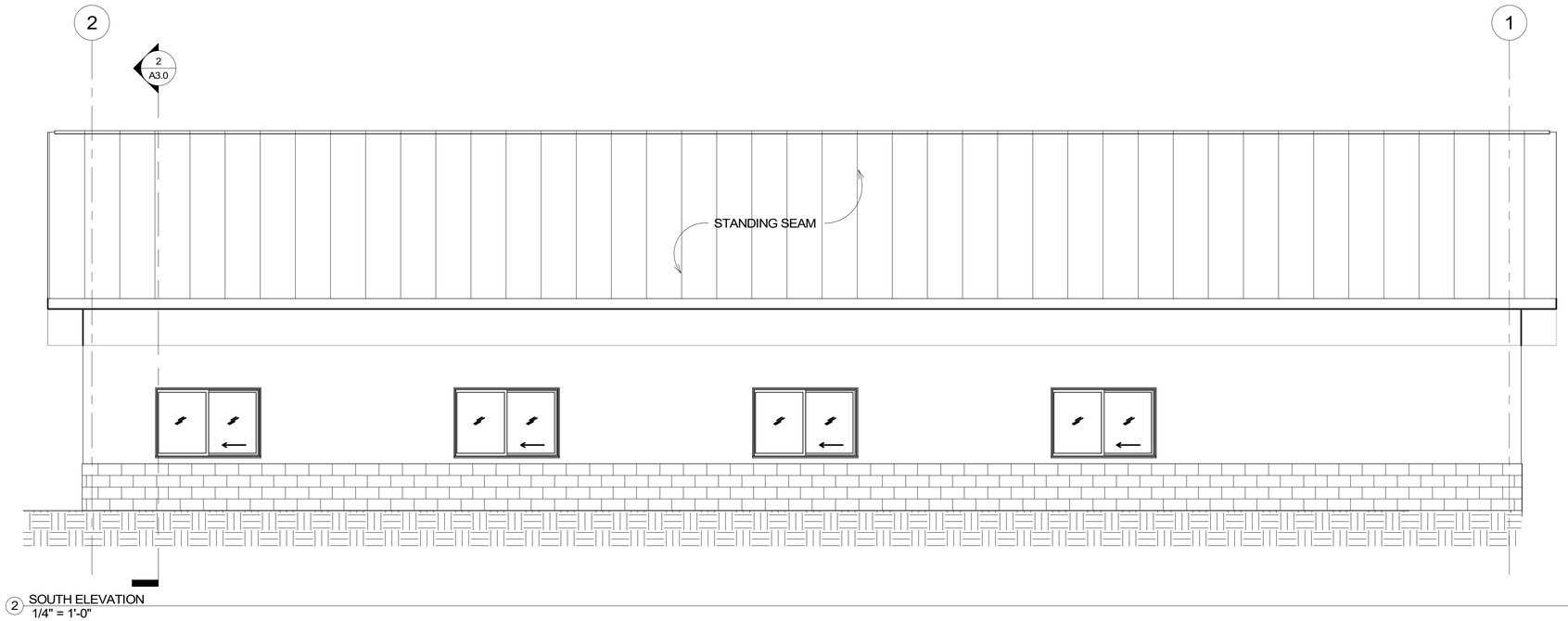

2 SOUTH ELEVATION
1/4" = 1'-0"

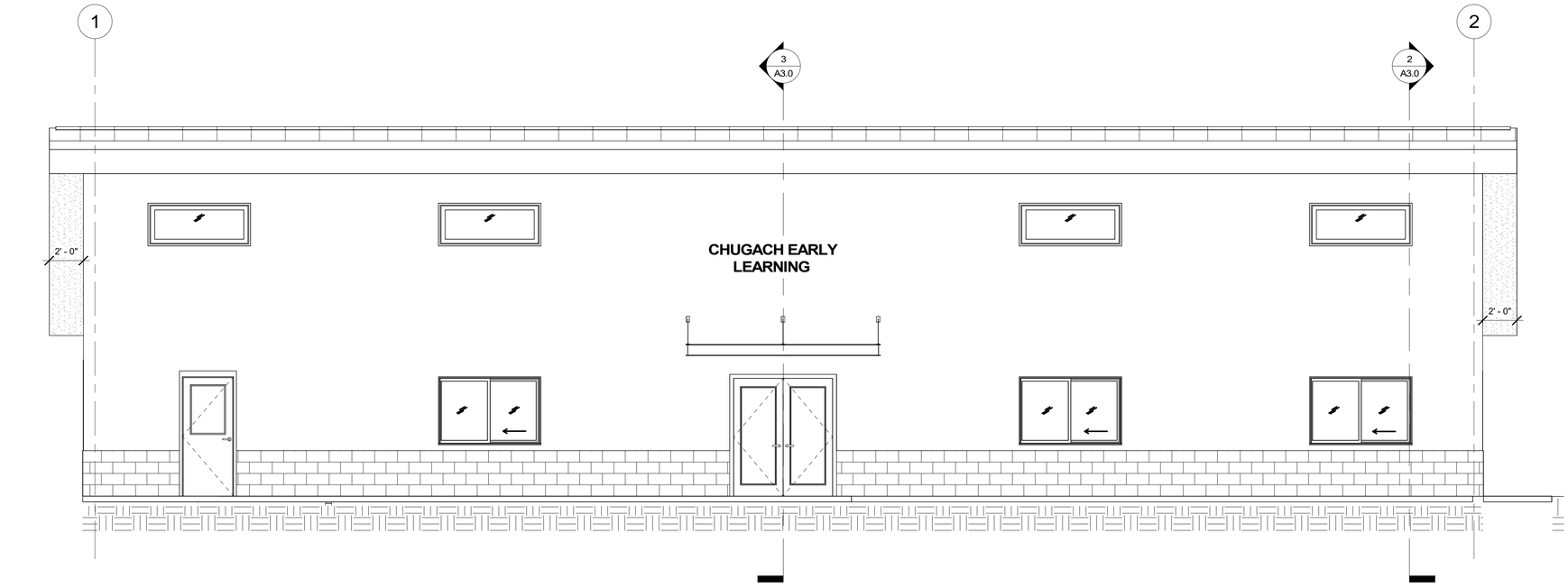

1 NORTH ELEVATION
1/4" = 1'-0"

65% SUBMITTAL

IF THIS SHEET IS LESS THAN: 22"X34" IT IS A REDUCED PRINT
- DO NOT SCALE DIMENSIONS FROM BLUEPRINTS -

STATE OF ALASKA
49TH
PRELIMINARY
NOT FOR CONSTRUCTION
7/13/2023

ROHDE ARCHITECTS
Architecture Planning Design/Build
11925 Old Glenn Hwy., Suite 201, Eagle River, AK 99577
ph. (907)696-2960
ARohde@RohdeArchitects.Com Corp. Auth. #AECC769

NO.	REVISION

C.S.D. - TRAINING BUILDING
9312 Vanguard Drive, Anchorage, Alaska

JOB NO.	2317
DATE	7/13/2023
DRAWN	GLM
REVIEWED	AGR

SHEET TITLE:
BUILDING ELEVATIONS

SHEET NO.
A2.0

8/17/2023 2:40:51 PM \\192.168.1.5\Share\Rohde and Associates\Drawings\Active Jobs\2317 Chugach School District\2317 Chugach S.D.Training Office.rvt

THIS SHEET IS FULL SIZE AT 34"X22"

1" ACTUAL

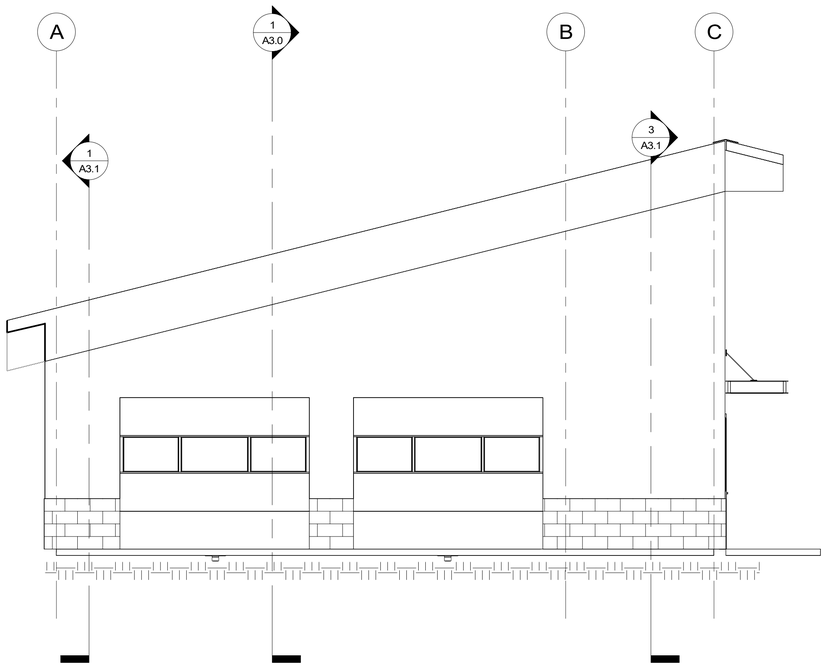

2 EAST ELEVATION
1/4" = 1'-0"

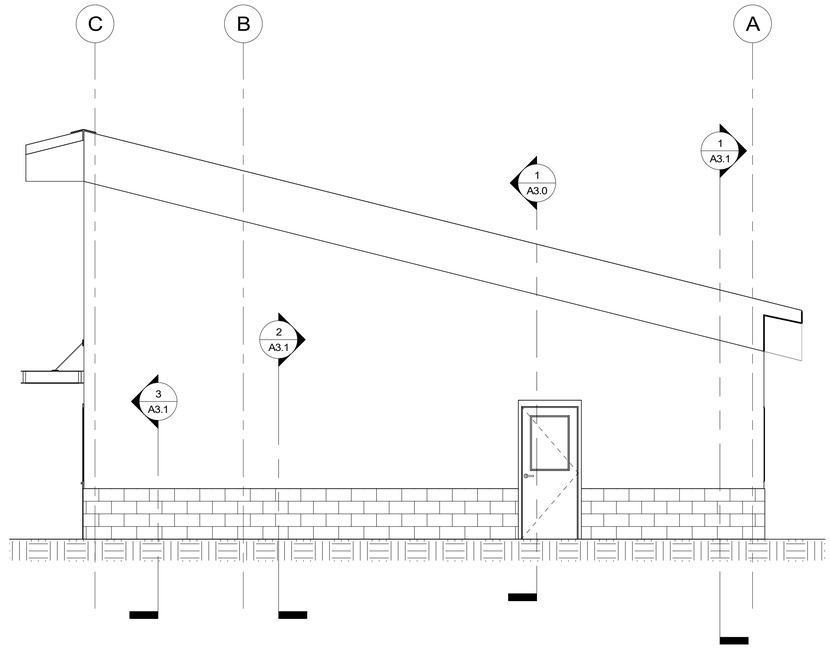

1 WEST ELEVATION
1/4" = 1'-0"

NOT FOR CONSTRUCTION
PRELIMINARY
STATE OF ALASKA
49TH
7/13/2023

ROHDE ARCHITECTS
Architecture Planning Design/Build
1925 Old Glenn Hwy., Suite 201, Eagle River, AK 99577
ph. (907)694-2580
AKrohde@RohdeArchitects.Com Corp. Auth. #AECC769

NO.	REVISION

C.S.D. - TRAINING BUILDING
9312 Vanguard Drive, Anchorage, Alaska

JOB NO.	2317
DATE	7/13/2023
DRAWN	GLM
REVIEWED	AGR

SHEET TITLE:
BUILDING ELEVATIONS

SHEET NO.
A2.1

65% SUBMITTAL

IF THIS SHEET IS LESS THAN: 22"X34" IT IS A REDUCED PRINT
- DO NOT SCALE DIMENSIONS FROM BLUEPRINTS -

8/17/2023 2:40:52 PM \\192.168.1.5\Share\Rohde and Associates\Drawings\Active Jobs\2317 Chugach School District\2317 Chugach S.D.Training Office.rvt

THIS SHEET IS FULL SIZE AT 34"x22"

1" ACTUAL

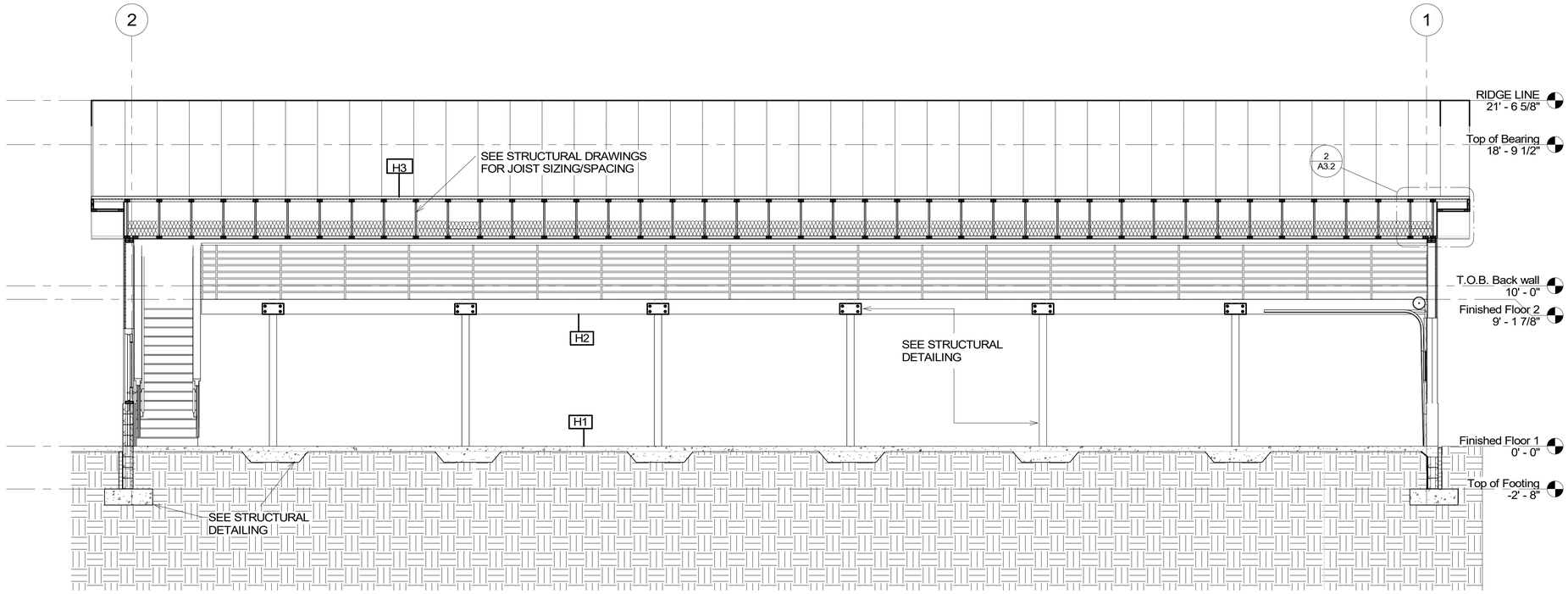

1 SECTION 1/ A3.0
1/4" = 1'-0"

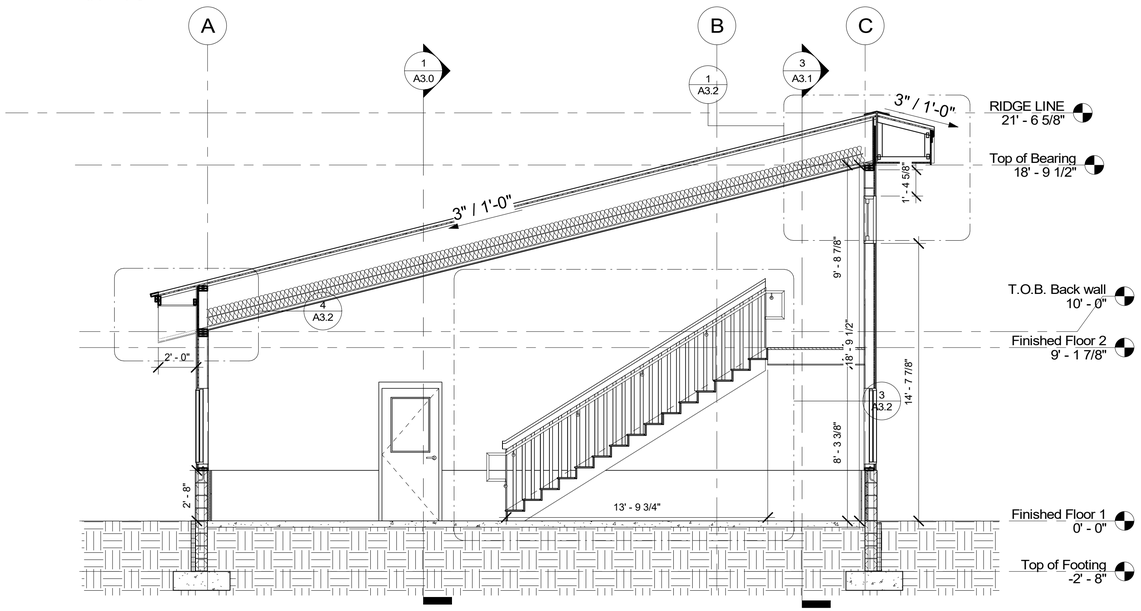

2 SECTION 3/ A3.0
1/4" = 1'-0"

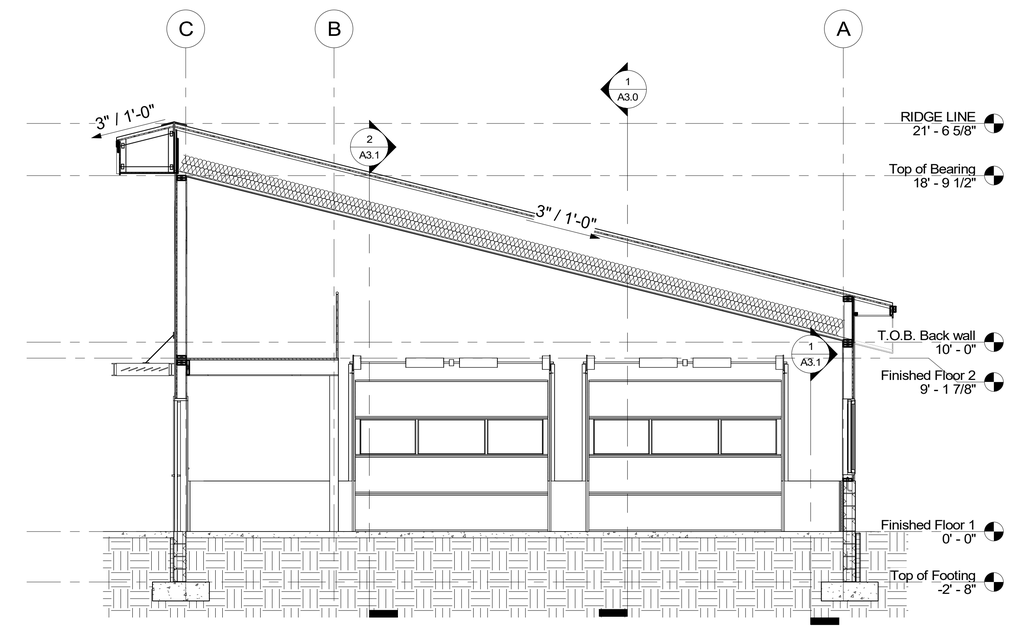

3 SECTION 2/ A3.0
1/4" = 1'-0"

65% SUBMITTAL

IF THIS SHEET IS LESS THAN: 22"X34" IT IS A REDUCED PRINT
- DO NOT SCALE DIMENSIONS FROM BLUEPRINTS -

STATE OF ALASKA
49TH
PRELIMINARY
NOT FOR CONSTRUCTION
7/13/2023

ROHDE ARCHITECTS
Architecture Planning Design/Build
11925 Old Glenn Hwy., Suite 201, Eagle River, AK 99577
ph. (907)696-2960
ARohde@RohdeArchitects.Com Corp. Auth. #AECC769

NO.	REVISION

C.S.D. - TRAINING BUILDING
9312 Vanguard Drive, Anchorage, Alaska

JOB NO.	2317
DATE	7/13/2023
DRAWN	GLM
REVIEWED	AGR

SHEET TITLE:
BUILDING SECTIONS

SHEET NO.
A3.0

8/17/2023 2:40:41 PM \\192.168.1.5\Share\Rohde and Associates\Drawings\Active Jobs\2317 Chugach School District\2317 Chugach S.D. Training Office.rvt

THIS SHEET IS FULL SIZE AT 34"x22"

1" ACTUAL

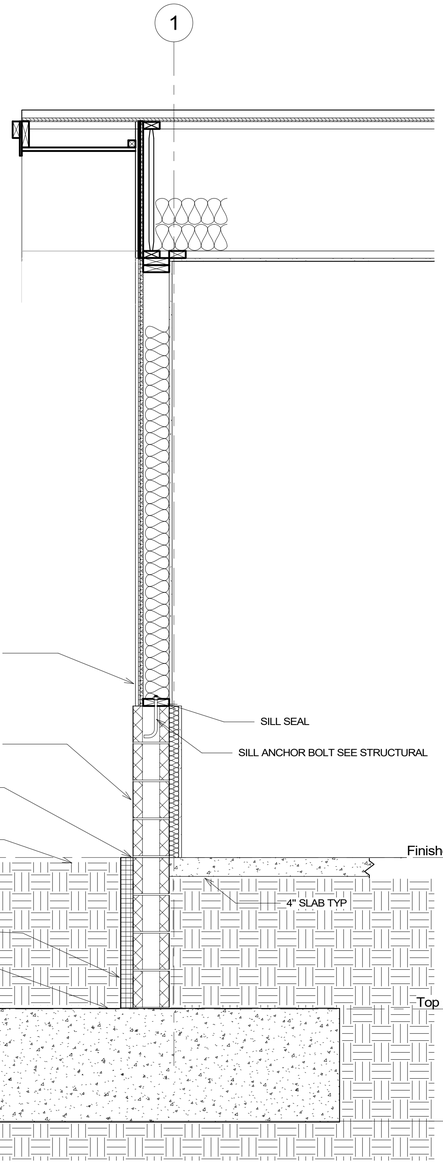

1 WALL SECTION 1/A3.1
3/4" = 1'-0"

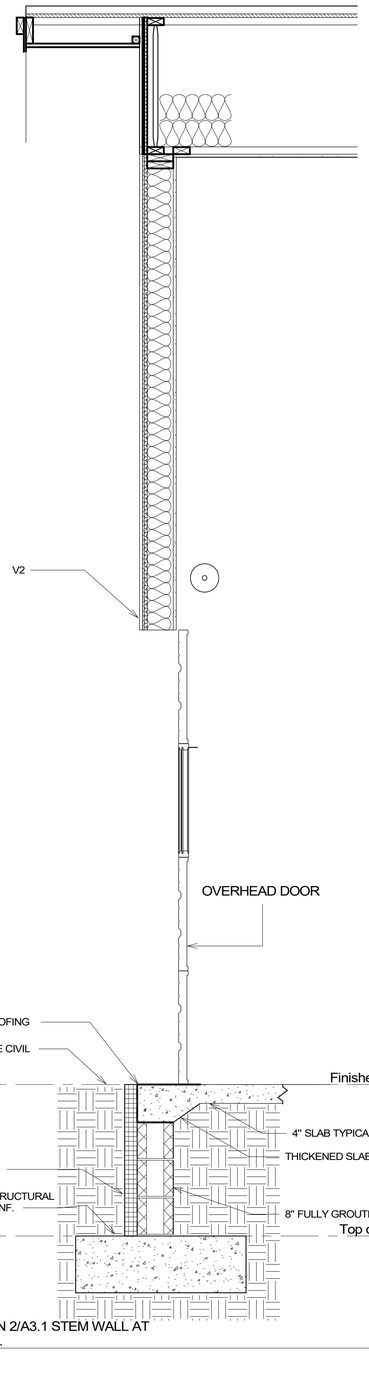

2 WALL SECTION 2/A3.1 STEM WALL AT
OH DOOR TYP.
3/4" = 1'-0"

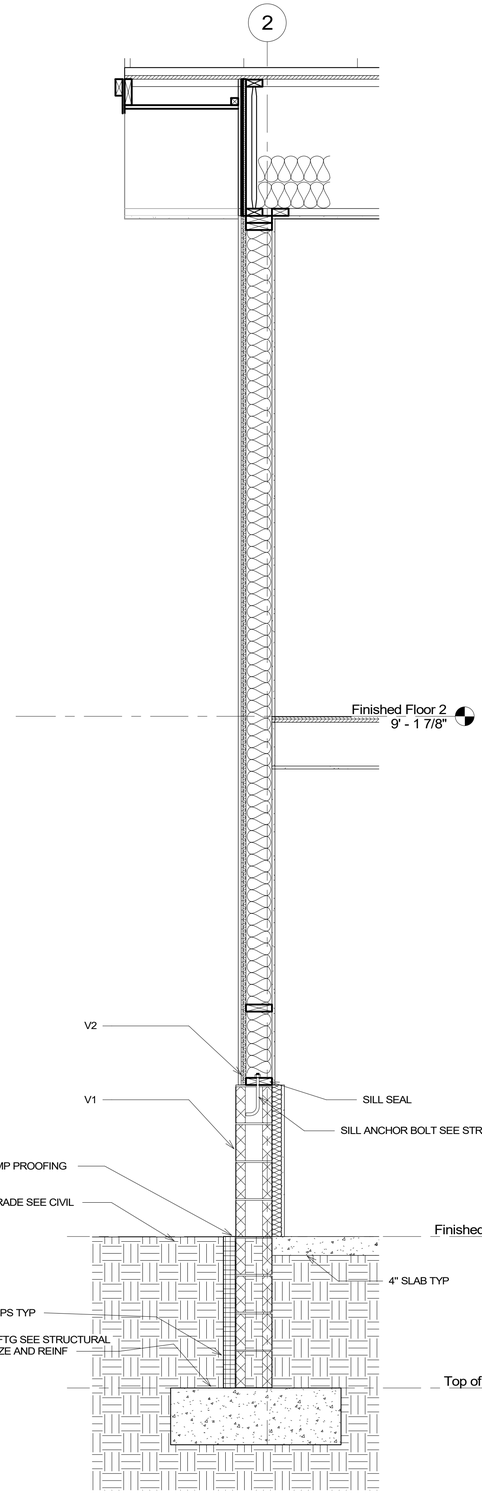

3 WALL SECTION 3/ A3.1
3/4" = 1'-0"

65% SUBMITTAL

IF THIS SHEET IS LESS THAN: 22"X34" IT IS A REDUCED PRINT
- DO NOT SCALE DIMENSIONS FROM BLUEPRINTS -

NOT FOR CONSTRUCTION
PRELIMINARY
STATE OF ALASKA
49TH
7/13/2023

ROHDE ARCHITECTS
Architecture Planning Design/Build
11925 Old Glenn Hwy., Suite 201, Eagle River, AK 99577
Ph. (907)696-2360
ARohde@RohdeArchitects.Com Corp. Auth. #AECC769

NO.	REVISION

C.S.D. - TRAINING BUILDING
9312 Vanguard Drive, Anchorage, Alaska

JOB NO.	2317
DATE	7/13/2023
DRAWN	GLM
REVIEWED	AGR

SHEET TITLE:
WALL SECTIONS

SHEET NO.
A3.1

8/17/2023 2:48:15 PM \\192.168.1.5\Share\Rohde and Associates\Drawings\Active Jobs\2317 Chugach School District\2317 Chugach S.D.Training Office.rvt

THIS SHEET IS FULL SIZE AT 34"X22"

1" ACTUAL

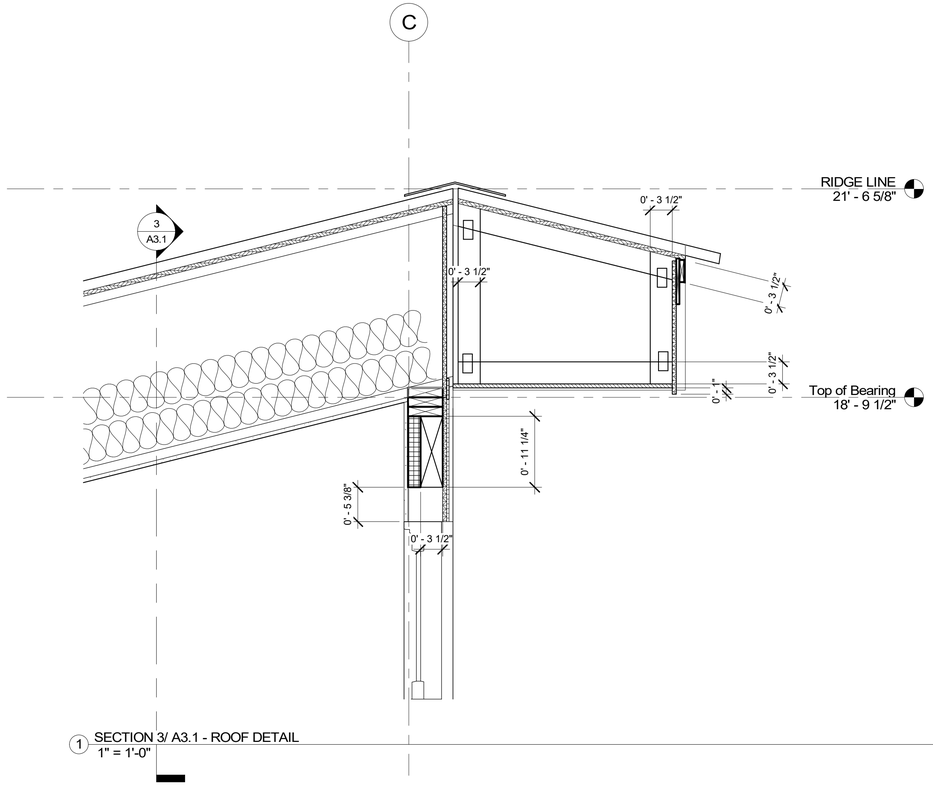

1 SECTION 3/ A3.1 - ROOF DETAIL
1" = 1'-0"

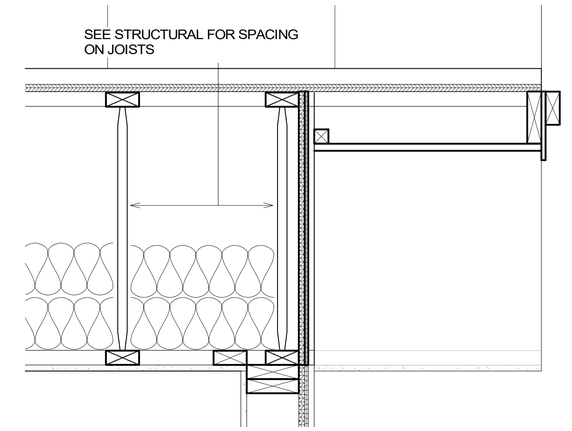

2 SECTION 2/ A3.0 - Callout 1
1 1/2" = 1'-0"

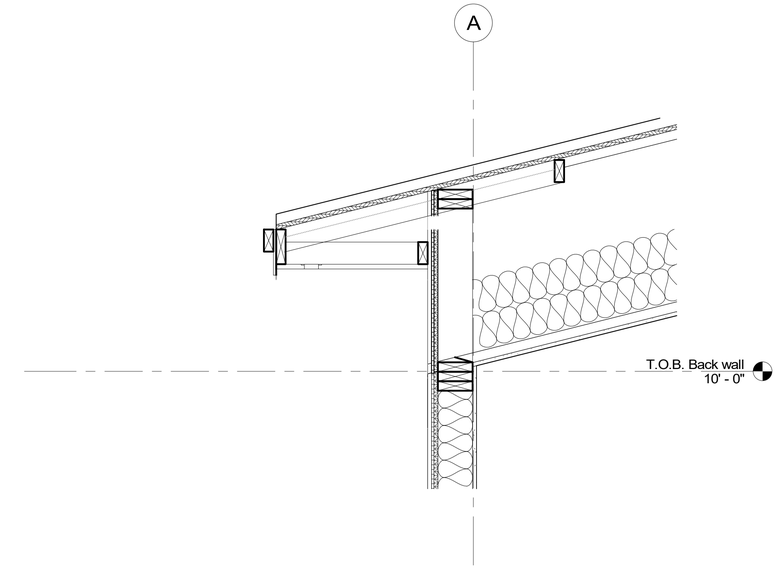

4 SECTION 3/ A3.0 - Callout 1
1" = 1'-0"

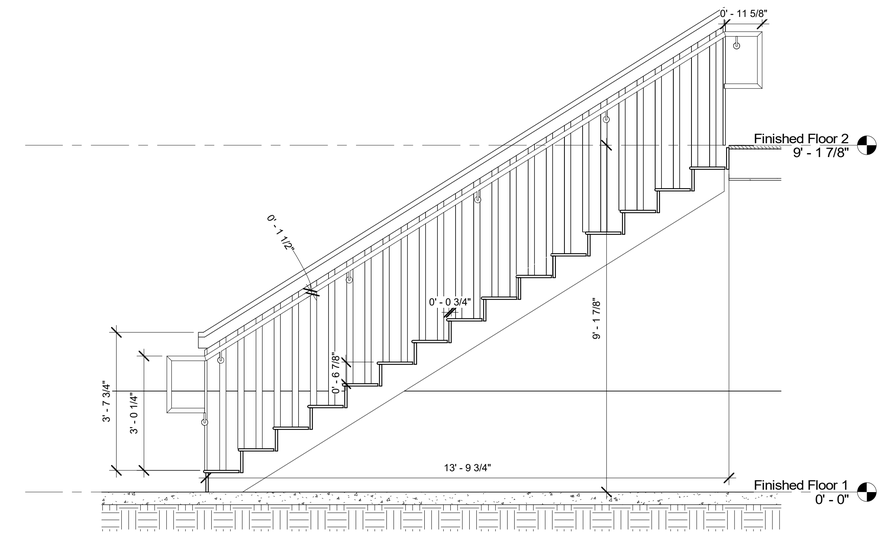

3 SECTION 3/ A3.1 - STAIR DETAIL
1/2" = 1'-0"

65% SUBMITTAL

IF THIS SHEET IS LESS THAN: 22"X34" IT IS A REDUCED PRINT
- DO NOT SCALE DIMENSIONS FROM BLUEPRINTS -

8/17/2023 2:47:55 PM \\192.168.1.5\Share\Rohde and Associates\Drawings\Active Jobs\2317 Chugach School District\2317 Chugach S.D. Training Office.rvt

NOT FOR CONSTRUCTION
PRELIMINARY
STATE OF ALASKA
49TH
7/13/2023

ROHDE ARCHITECTS
Architecture Planning Design/Build
1925 Old Glenn Hwy., Suite 201, Eagle River, AK 99577
Ph. (907)694-2360
ARohde@RohdeArchitects.Com Corp. Auth. #AECC769

NO.	REVISION

C.S.D. - TRAINING BUILDING
9312 Vanguard Drive, Anchorage, Alaska

JOB NO.	2317
DATE	7/13/2023
DRAWN	GLM
REVIEWED	AGR

SHEET TITLE:
ROOF AND STAIR DETAILS

SHEET NO.
A3.2

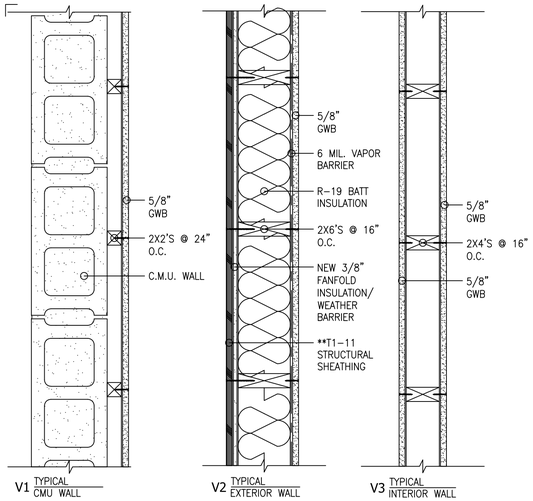

1 / A0.9 **VERTICAL ASSEMBLIES**

NOTE: ** = INDICATES MATERIAL LAYER WAS ROTATED 90° FOR BETTER VIEW OF LAYER WITHIN ASSEMBLY DETAIL.

1 1/2" = 1'-0"

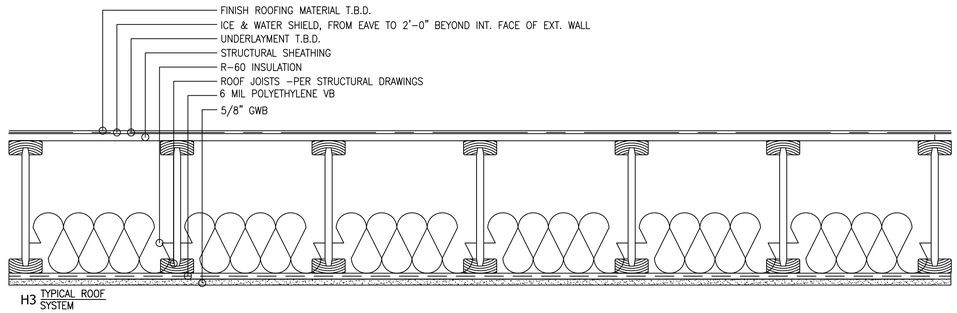

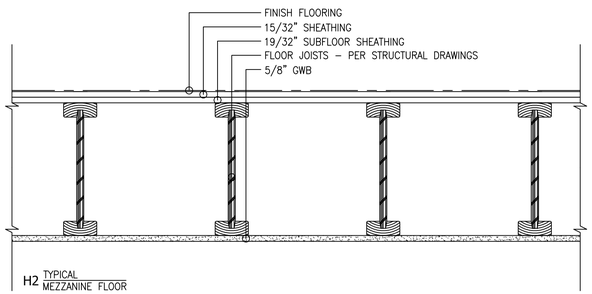

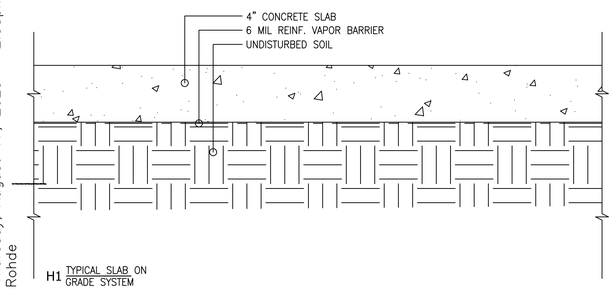

2 / A0.9 **HORIZONTAL ASSEMBLIES**

1 1/2" = 1'-0"

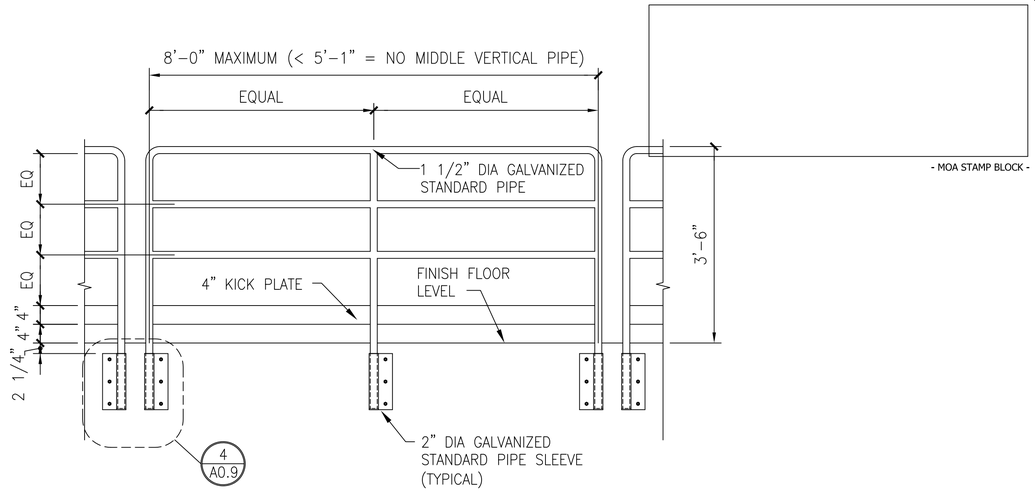

3 / A4.0 **REMOVABLE GUARDRAIL ELEVATION (TYPICAL)**

1/2" = 1'-0"

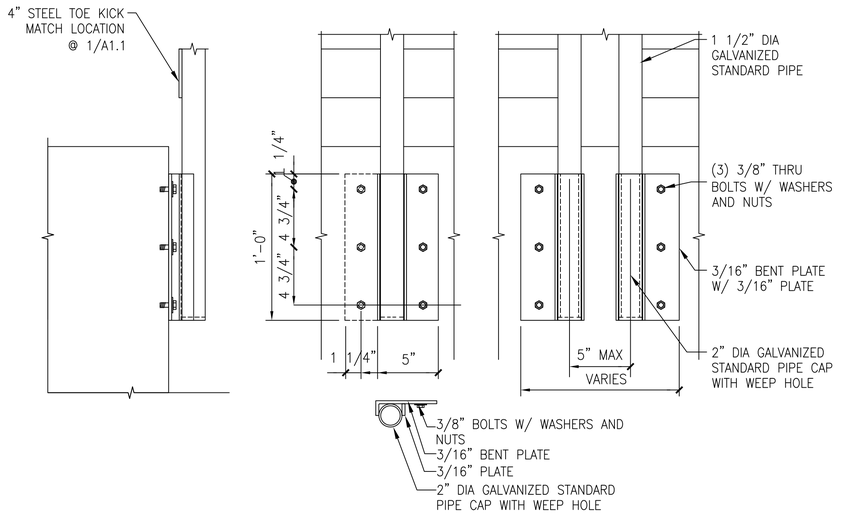

4 / A4.0 **REMOVABLE GUARDRAIL DETAILS (TYPICAL)**

1-1/2" = 1'-0"

- MOA STAMP BLOCK -

NOT FOR CONSTRUCTION

ROHDE ARCHITECTS
Architecture Planning Design/Build
11925 Old Glenn Hwy., Suite 201, Eagle River, AK 99577
PH. (907)331-3111
ARohde@RohdeArchitects.com

NO.	REVISION	DATE

C.S.D. - TRAINING OFFICE
9312 VANGUARD DRIVE
Anchorage, Alaska

JOB NO.	2317
DATE	JULY 21, 2023
DRAWN	GLM
REVIEWED	AGR

SHEET TITLE: ASSEMBLIES & DETAILS

SHEET NO. A4.0

IF THIS SHEET IS LESS THAN: 22"X34" IT IS A REDUCED PRINT - DO NOT SCALE DIMENSIONS FROM BLUEPRINTS -

FileName: \\192.168.1.5\Share\Rohde and Associates\Drawings\Active Jobs\2317 Chugach School District\A-Sheets_JN2312.dwg
Plotted on: Thursday, August 17, 2023 - 2:38pm
UserName: Rohde

1" ACTUAL

THIS SHEET IS FULL SIZE AT 34"x22"

ABBREVIATIONS

AB	ANCHOR BOLT
ACI	AMERICAN CONCRETE INSTITUTE
AISC	AMERICAN INSTITUTE OF STEEL CONSTRUCTION
ALT	ALTERNATE
APA	AMERICAN PLYWOOD ASSOCIATION
ARCH	ARCHITECTURAL
ASTM	AMERICAN SOCIETY FOR TESTING & MATERIALS
AWS	AMERICAN WELDING SOCIETY
BLKG	BLOCKING
BM	BEAM
BNDRY	BOUNDARY
BOC	BOTTOM OF CONCRETE
BOD	BOTTOM OF DECK
BOS	BOTTOM OF STEEL
BOT	BOTTOM
BTWN	BETWEEN
CIP	CAST IN PLACE (CONCRETE)
CJP	COMPLETE JOINT PENETRATION
CLR	CLEAR
COL	COLUMN
CONN	CONNECTION
CONT	CONTINUOUS
CVN	CHARPY V NOTCH
DIAM	DIAMETER
DWGS	DRAWINGS
(E)	EXISTING
EA	EACH
EL	ELEVATION
ELEC	ELECTRICAL
ELEV	ELEVATION
EOR	ENGINEER OF RECORD
EW	EACH WAY
EQ	EQUAL
FC	CONCRETE COMPRESSIVE STRENGTH
F'M	MASONRY COMPRESSIVE STRENGTH
FDN	FOUNDATION
FOC	FACE OF CONCRETE
FT	FEET
FTG	FOOTING
GA	GAGE OR GAUGE
GALV	GALVANIZED
GLB	GLUE-LAMINATED BEAM
HORIZ	HORIZONTAL
HS	HEADED STUD
HSH	HORIZONTAL SLOTTED HOLE
HSS	HOLLOW STRUCTURAL SECTION
LVL	LAMINATED VENEER LUMBER
MAX	MAXIMUM
MECH	MECHANICAL
MF	MOMENT FRAME
MIN	MINIMUM
MT	MAGNETIC PARTICLE STRIP
NA	NOT APPLICABLE
NFS	NON FROST SUSCEPTIBLE
NIC	NOT IN CONTRACT
NTS	NOT TO SCALE
OC	ON CENTER
OWSJ	OPEN WEB STEEL JOIST
PDF	POWER DRIVEN FASTENER
PLF	POUNDS PER LINEAR FOOT
PSF	POUNDS PER SQUARE FOOT
PSI	POUNDS PER SQUARE INCH
REQ'D	REQUIRED
REINF	REINFORCING
RT	RADIOGRAPHIC TEST
SDI	STEEL DECK INSTITUTE
SJI	STEEL JOIST INSTITUTE
SQ	SQUARE
STD	STANDARD
TBD	TO BE DETERMINED
TEMP	TEMPERATURE
TOC	TOP OF CONCRETE
TOS	TOP OF STEEL
TS	TUBE STEEL
TYP	TYPICAL
UNO	UNLESS NOTED OTHERWISE
UT	ULTRASONIC
VERT	VERTICAL
W	WIDE FLANGE DESIGNATION
WF	WIDE FLANGE
WP	WORK POINT
WWF	WELDED WIRE FABRIC
W/	WITH

SCHEDULE OF CONSTRUCTION MATERIALS

CONCRETE	LOCATION	28-DAY STRENGTH	MAX. W/C RATIO	AIR ENTRAINMENT
	EXTERIOR CONCRETE (EXPOSED TO FREEZING)	4,500 P.S.I.	0.45	6% +/- 1%
	INTERIOR SLABS (NOT EXPOSED TO FREEZING)	4,000 P.S.I.	0.45	3%
	FOOTINGS, FOUNDATION WALLS	3,000 P.S.I.	0.50	5% +/- 1%

MASONRY	ITEM	TYPE	COMP. STRENGTH	SLUMP
	CONCRETE MASONRY UNITS	ASTM C90	1,900 P.S.I.	
	MORTAR	TYPE S OR M	1,800 P.S.I.	
	GROUT	COURSE (PEA GRAVEL)	2,500 P.S.I.	8-10 INCHES

REINFORCING	APPLICATION	TYPE	COMMENTS
	FABRICATED AND STRAIGHT BARS	ASTM A615, GRADE 60	SEE LAP SPLICE SCHEDULE FOR LAP LENGTHS
	FIELD BENT	ASTM A615, GRADE 40	

STRUCTURAL STEEL	APPLICATION	TYPE	GRADE	Fy
	WIDE-FLANGE BEAMS AND COLUMNS	ASTM A992	GRADE 50	50 KSI
	HSS COLUMNS	ASTM A500	GRADE C	46 KSI ROUND 50 KSI RECT.
	CHANNELS, ANGLES AND OTHER SHAPES	ASTM A36		36 KSI
	PLATES	ASTM A572	GRADE 50	50 KSI
	PIPE	ASTM A53	GRADE B	35 KSI
	STRUCTURAL BOLTS	ASTM A325	GROUP A	
	ANCHOR RODS	ASTM F1554	GRADE 36	

WOOD	APPLICATION		SPECIES	GRADE	COMMENTS			
	DIMENSION LUMBER	STRUCTURAL WALL STUDS	HEM-FIR	NO. 2				
		PLATES AND LEDGERS	HEM-FIR	NO. 2				
		SAWN BEAMS	DOUG. FIR-LARCH	NO. 1				
		POSTS	DOUG. FIR-LARCH	NO. 1				
		BLOCKING, MISC FRAMING	HEM-FIR	STD & BETTER				
	GLUED-LAMINATED BEAMS		ALLOWABLE STRESSES - P.S.I.					
			SPECIES COMB	Fb TENSION ZONE	Fb COMP ZONE	Fv	Fc TENSION ZONE	Fc COMP ZONE	1.0 E 6
		SIMPLE SPANS	DF V4	2400	1850	190	650	650	1.8
		CONTINUOUS SPANS, CANTILEVERS	DF V8	2400	2400	190	650	650	1.8
	COMP. LUMBER	LAMINATED VENEER LUMBER		2900	2900	285		3000	2.0

WOOD PANEL SHEATHING	APPLICATION	GRADE	MIN. THICK.	SPAN RATING	EXPOSURE
	ROOF	APA RATED	19/32"	40/20	EXPOSURE 1
	FLOORS	APA RATED	23/32"	48/24	EXPOSURE 1
	SHEAR WALLS	APA RATED	19/32"	32/16	EXPOSURE 1

STRUCTURAL DESIGN CRITERIA SCHEDULE

CRITERIA	DESCRIPTION	VALUE	COMMENTS
CODE	IBC 2018		WITH MOA LOCAL AMENDMENTS
SEISMIC	ANALYSIS PROCEDURE	ELF	PER ASCE 7-16
	SEISMIC DESIGN CATEGORY	D	
	RISK CATEGORY	II	
	SEISMIC IMPORTANCE FACTOR, IE	1.00	
	SITE CLASS	D	
	0.2S SPECTRAL RESPONSE ACCELERATION, Ss	1.50	
	1.0S SPECTRAL RESPONSE ACCELERATION, S1	0.68	
	0.2S SPECTRAL RESPONSE COEFFICIENT, Sds	1.00	
	1.0S SPECTRAL RESPONSE COEFFICIENT, Sd1	0.68	
	STRUCTURAL SYSTEM		LIGHT FRAMED (WOOD) WALLS SHEATHED WITH WOOD STRUCTURAL PANELSRATED FOR SHEAR RESISTANCE
	RELIABILITY/REDUNDANCY	1	
	RESPONSE MODIFICATION FACTOR, R	6.5	
	OMEGA	3	
	Cs (STRENGTH DESIGN)	0.185	
	V (STRENGTH DESIGN)	23 KIPS	
WIND	BASIC WIND SPEED (3 SECOND GUST)	155 MPH	PER ASCE 7-16 BASIC WIND SPEED MAP
	RISK CATEGORY	II	
	EXPOSURE FACTOR	B	
	INTERNAL PRESSURE COEFFICIENT, GCpi	±0.18	ENCLOSED BUILDING
COMP. & CLADDING PRESSURES		10 Ft² / 100 Ft²	WIND VALUES SHOWN ARE ULTIMATE LOADS MULTIPLY BY 0.6 FOR ALLOWABLE LOADS
	ROOF INTERIOR - ZONE ①	55 PSF / 50 PSF	VALUES MAY BE NEGATIVE OR POSITIVE
	ROOF PERIMETER - ZONE ②	70 PSF / 55 PSF	
	ROOF CORNER - ZONE ③	115 PSF / 80 PSF	VALUES MAY BE INTERPOLATED BETWEEN 10 SQFT AND 100 SQFT
	WALL INTERIOR - ZONE ④	50 PSF / 45 PSF	ZONE 5 EXISTS FOR WALLS WITHIN 3' - 8" OF WALL CORNERS
	WALL CORNER - ZONE ⑤	65 PSF / 45 PSF	
ROOF LIVE LOADS	GROUND SNOW LOAD	50 PSF	
	SNOW LOAD EXPOSURE FACTOR	1.0	
	THERMAL FACTOR Ct	1.1	
	SNOW IMPORTANCE FACTOR	1.0	
	FLAT ROOF SNOW LOAD	40 PSF	
	SNOW DRIFT LOADS	PER ASCE 7-16	
FLOOR LIVE LOADS	1ST LEVEL SLAB ON GRADE	100 PSF	
FOUNDATIONS	ALLOWABLE SOIL BEARING PRESSURE	2000 PSF	PRESUMPTIVE BEARING PRESSURE PER IBC TABLE 1806.2

DEFERRED SUBMITTALS

DEFERRED SUBMITTAL ITEMS SHALL BE REVIEWED BY THE EOR AND THEN SUBMITTED TO THE BUILDING OFFICIAL.

THE CONTRACTOR SHALL BE RESPONSIBLE FOR SUBMITTING CALCULATION AND DRAWINGS STAMPED BY AN ALASKA REGISTERED PROFESSIONAL ENGINEER FOR THE FOLLOWING CONTRACTOR DESIGNED ITEMS:

- SEISMIC RESTRAINT OF ARCHITECTURAL, MECHANICAL AND ELECTRICAL COMPONENTS
- ROOFING ATTACHMENT

STRUCTURAL NOTES
ALL MATERIALS, WORKMANSHIP AND CONSTRUCTION METHODS SHALL BE IN ACCORDANCE WITH THE STRUCTURAL DRAWINGS, THE SPECIFICATIONS AND NOTES LISTED BELOW. MINIMUM PROVISIONS OF THE INTERNATIONAL BUILDING CODE (IBC 2021), AND LOCAL AMENDMENTS SHALL APPLY WHERE DETAILS ARE NOT SHOWN OR DESCRIBED.

AS-BUILT DRAWINGS
CONTRACTOR SHALL MAINTAIN A CURRENT SET OF DRAWINGS ON SITE, MODIFIED TO REFLECT ALL DESIGN CHANGES TO THE ORIGINAL DRAWING SET.

PND ENGINEERS INC IS NOT RESPONSIBLE FOR SAFETY PROGRAMS, METHODS, OR PROCEDURES OF OPERATION, OR THE CONSTRUCTION OF THE DESIGN SHOWN ON THESE DRAWINGS. DRAWINGS ARE FOR USE ON THIS PROJECT ONLY AND ARE NOT INTENDED FOR REUSE WITHOUT WRITTEN APPROVAL FROM PND. DRAWINGS ARE ALSO NOT TO BE USED IN ANY MANNER THAT WOULD CONSTITUTE A DETRIMENT DIRECTLY OR INDIRECTLY TO PND.

65% SUBMITTAL

IF THIS SHEET IS LESS THAN: 22"X34" IT IS A REDUCED PRINT
- DO NOT SCALE DIMENSIONS FROM BLUEPRINTS -

STATE OF ALASKA — 49TH — NOT FOR CONSTRUCTION — PRELIMINARY — 07.10.2023

ROHDE ARCHITECTS
Design/Build
Architecture
Planning
11925 Old Glenn Hwy., Suite 201, Eagle River, AK 99577
Ph. (907)868-2360
ARohde@rohdearchitects.Com Corp. Auth. #AECC769

NO.	REVISION

CHUGACH TRAINING BUILDING
9312 VANGAURD DRIVE
ANCHORAGE, ALASKA 99507

JOB NO.	231079
DATE	07.10.2023
DRAWN	JJL
REVIEWED	DNB

SHEET TITLE: DESIGN CRITERIA

SHEET NO. S1.10

7/19/2023 4:42:05 PM C:\Users\jlobdell\Documents\231079 Chugach School District Training Facilities v24_jlobdellHPSRR.rvt

THIS SHEET IS FULL SIZE AT 34"x22" 1" ACTUAL

STATEMENT OF SPECIAL INSPECTIONS

THE FOLLOWING SPECIAL INSPECTIONS SHALL BE PERFORMED BY QUALIFIED PERSONNEL EMPLOYED BY THE OWNER OR THE REGISTERED DESIGN PROFESSIONAL IN RESPONSIBLE CHARGE ACTING AS THE OWNER'S AGENT.

SPECIAL INSPECTOR QUALIFICATIONS:
THE SPECIAL INSPECTOR SHALL PROVIDE WRITTEN DOCUMENTATION TO THE BUILDING OFFICIAL DEMONSTRATING THEIR COMPETENCE AND RELEVANT EXPERIENCE OR TRAINING.

INSPECTION TASKS:
INSPECTION TASKS ARE LISTED IN THE ATTACHED TABLES AND IN THE 2018 EDITION OF THE IBC CHAPTER 17.

FABRICATOR APPROVAL:
SPECIAL INSPECTIONS REQUIRED BY SECTION 1705 ARE NOT REQUIRED WHERE THE WORK IS DONE ON THE PREMISES OF A FABRICATOR REGISTERED AND APPROVED TO PERFORM SUCH WORK WITHOUT SPECIAL INSPECTION (IBC 1704.2.5.2). HOWEVER, NON DESTRUCTIVE TESTING REQUIREMENTS CANNOT BE WAIVED PER AISC 360-10 SECTION N7. THE CONTRACTOR'S FABRICATOR SHALL PERFORM OR ENGAGE A QUALIFIED TESTING AGENCY TO PERFORM REQUIRED TESTING ON THE PREMISES OF THE FABRICATOR. TESTING DOCUMENTATION SHOWING COMPLIANCE SHALL BE SUBMITTED TO THE OWNER UPON COMPLETION OF TESTING.

REPORT REQUIREMENTS:
REPORTS SHALL BE COMPLETED ON A DAILY BASIS AND DISTRIBUTED ON A WEEKLY BASIS. COPIES OF REPORTS SHALL BE DISTRIBUTED TO THE GENERAL CONTRACTOR, THE ENGINEER OF RECORD AND THE ARCHITECT OF RECORD. REPORTS SHALL INDICATE WHETHER THE WORK WAS OR WAS NOT COMPLETED IN CONFORMANCE WITH THE CONSTRUCTION DOCUMENTS. DISCREPANCIES SHALL BE IMMEDIATELY BROUGHT TO THE ATTENTION OF THE GENERAL CONTRACTOR. IF THEY ARE NOT CORRECTED, DISCREPANCIES SHALL BE BROUGHT TO THE ATTENTION OF THE REGISTERED DESIGN PROFESSIONAL IN RESPONSIBLE CHARGE. A FINAL REPORT DOCUMENTING THE SPECIAL INSPECTIONS PERFORMED AND THE CORRECTION OF ANY DISCREPANCIES SHALL BE DISTRIBUTED AS NOTED ABOVE.

LEVEL B REQUIRED VERIFICATION AND INSPECTION OF MASONRY

	VERIFICATION AND INSPECTION TASK	FREQUENCY OF INSPECTION	REFERENCE FOR CRITERIA: TMS402/ACI530 ASCE 5	REFERENCE FOR CRITERIA: TMS 602/ACI530.1 ASCE 6
	VERIFICATION OF SLUMP FLOW AND VSI AS DELIVERED TO THE SITE FOR SELF-CONSOLIDATING GROUT			ART. 1.5B.1.b.3b
	VERIFICATION OF f'm AND f'acc PRIOR TO CONSTRUCTION EXCEPT WHERE SPECIFICALLY EXEMPTED BY CODE			ART. 1.4 B
1	VERIFY COMPLIANCE WITH THE APPROVED SUBMITTALS	PERIODIC		ART. 1.5
2	AS MASONRY CONSTRUCTION BEGINS, THE FOLLOWING SHALL BE VERIFIED TO ENSURE COMPLIANCE:			
	a. PROPORTIONS OF SITE-PREPARED MORTAR	PERIODIC		ART. 2.1, 2.6A
	b. CONSTRUCTION OF MORTAR JOINTS	PERIODIC		ART. 3.3B
	c. GRADE AND SIZE OF PRESTRESSING TENDONS AND ANCHORAGES	PERIODIC		ART. 2.4 B, 2.4 H
	d. LOCATION OF REINFORCEMENT, CONNECTORS AND ANCHORAGES	PERIODIC		ART. 3.4, 3.6A
	e. PRESTRESSING TECHNIQUE	PERIODIC		ART. 3.6 B
	f. PROPERTIES OF THIN-BED MORTAR FOR ACC MASONRY	CONTINUOUS		ART. 2.1 C
3	PRIOR TO GROUTING, THE FOLLOWING SHALL BE VERIFIED TO ENSURE COMPLIANCE:			
	a. GROUT SPACE IS CLEAN	PERIODIC		ART. 3.2D, 3.2 F
	b. GRADE, TYPE AND SIZE OF REINFORCEMENT AND ANCHOR BOLTS, AND PRESTRESSING TENDONS AND ANCHORAGES	PERIODIC	SEC. 1.16	ART. 2.4, 3.4
	c. PLACEMENT OF REINFORCING AND CONNECTORS, AND ANCHORAGES	PERIODIC	SEC. 1.16	ART. 3.2 E, 3.4, 3.6A
	d. PROPORTIONS OF SITE-PREPARED GROUT	PERIODIC		ART. 2.6B, 2.4 G.1.b
	e. CONSTRUCTION OF MORTAR JOINTS	PERIODIC		ART. 3.3B
4	DURING CONSTRUCTION THE INSPECTION PROGRAM SHALL VERIFY:			
	a. SIZE AND LOCATION OF STRUCTURAL ELEMENTS	PERIODIC		ART. 3.3F
	b. TYPE,SIZE AND LOCATION OF ANCHORS, INCLUDING OTHER DETAILS OF ANCHORAGE OF MASONRY TO STRUCTURAL MEMBERS, FRAMES OR OTHER CONSTRUCTION	PERIODIC	SEC. 1.16.4.3, 1.17.1	
	c. WELDING OF REINFORCING BARS	CONTINUOUS	SEC. 2.1.9.7.2, 3.3.3.4(c) 8.3.3.4(b)	
	d. PREPARATION, CONSTRUCTION AND PROTECTION OF MASONRY DURING COLD WEATHER (TEMPERATURE BELOW 40 DEGREES F) OR HOT WEATHER	PERIODIC		ART. 1.8C, 1.8D
	g. PLACEMENT OF ACC MASONRY UNITS AND CONSTRUCTION OF THIN-BED MORTAR JOINTS	CONTINUOUS		ART. 3.3 B.8
5	PREPARATION OF ANY REQUIRED GROUT SPECIMENS, MORTAR SPECIMENS AND/OR PRISMS SHALL BE OBSERVED	PERIODIC		ART. 1.4B.2.a.3, 1.4 B.2.b.3, 1.4 B.2.c.3, 1.4 B.3, 1.4 B.4

SPECIAL INSPECTION FOR WIND RESISTANCE

	VERIFICATION AND INSPECTION TASK	FREQUENCY OF INSPECTION	REMARKS
1	STRUCTURAL WOOD: NAILING, BOLTING, ANCHORING AND FASTENING OF WOOD SHEAR WALLS, DRAG STRUTS, HOLDOWNS AND DIAPHRAGMS.	PERIODIC	
2	ARCHITECTURAL COMPONENTS: ROOF AND WALL CLADDING.	PERIODIC	

REQUIRED VERIFICATION AND INSPECTION OF CONCRETE

	VERIFICATION AND INSPECTION TASK	FREQUENCY OF INSPECTION	REFERENCE FOR CRITERIA: REF. STANDARD	REFERENCE FOR CRITERIA: IBC REFERENCE
1	INSPECTION OF REINFORCING STEEL, AND PLACEMENT	PERIODIC	ACI 318: 3.5, 7.1-7.7	1910.4
2	INSPECTION OF REINFORCING STEEL WELDING IN ACCORDANCE WITH TABLE 1705.2.2, ITEM 2b		AWS D1.4 ACI 318: 3.5.2	
3	INSPECTION OF ANCHORS CAST IN CONCRETE WHERE ALLOWABLE LOADS HAVE BEEN INCREASED OR WHERE STRENGTH DESIGN IS USED	PERIODIC	ACI 318: 8.1.3, 21.2.8	1908.5, 1909.1
4	INSPECTION OF ANCHORS POST INSTALLED IN HARDENED CONCRETE MEMBERS	PERIODIC	ACI 318: 3.8.6, 8.1.3, 21.2.8	1909.1
5	VERIFY USE OF REQUIRED MIX DESIGN	PERIODIC	ACI 318: 4, 5.2-5.4	1904.3, 1910.2, 1910.3
6	AT THE TIME FRESH CONCRETE IS SAMPLED TO FABRICATE SPECIMENS FOR STRENGTH TESTS, PERFORM SLUMP AND AIR CONTENT TESTS, AND DETERMINE THE TEMPERATURE OF THE CONCRETE	CONTINUOUS	ASTM C172 ASTM C31 ACI 318: 5.6, 5.8	1910.10
7	INSPECTION OF CONCRETE PLACEMENT FOR PROPER APPLICATION TECHNIQUES	CONTINUOUS	ACI 318: 5.9, 5.10	1910.6, 1910.7, 1910.8
8	INSPECTION FOR MAINTENANCE OF SPECIFIED CURING TECHNIQUES	PERIODIC	ACI 318: 5.11-5.13	1910.9
9	INSPECT FORMWORK FOR SHAPE, LOCATION AND DIMENSIONS OF THE CONCRETE MEMBER BEING FORMED	PERIODIC	ACI 318: 6.11	

SPECIAL INSPECTION FOR SEISMIC RESISTANCE

	VERIFICATION AND INSPECTION TASK	FREQUENCY OF INSPECTION	REMARKS
1	STRUCTURAL WOOD: NAILING, BOLTING, ANCHORING AND FASTENING OF WOOD SHEAR WALLS, DRAG STRUTS, HOLDOWNS AND DIAPHRAGMS.	PERIODIC	
2	ARCHITECTURAL COMPONENTS: ROOF AND WALL CLADDING. INTERIOR AND EXTERIOR NON-BEARING WALLS. INTERIOR AND EXTERIOR VENEER SYSTEMS.	PERIODIC	

REQUIRED INSPECTION OF SOILS

	VERIFICATION AND INSPECTION TASK	FREQUENCY OF INSPECTION	REMARKS
1	VERIFY MATERIALS BELOW SHALLOW FOUNDATIONS ARE ADEQUATE TO ACHIEVE THE DESIGN BEARING CAPACITY	PERIODIC	
2	VERIFY EXCAVATIONS EXTEND TO PROPER DEPTH AND HAVE REACHED PROPER MATERIAL.	PERIODIC	
3	PERFORM CLASSIFICATION AND TESTING OF FILL MATERIALS.	PERIODIC	
4	VERIFY USE OF PROPER MATERIALS, DENSITIES AND LIFT THICKNESS DURING PLACEMENT AND COMPACTION OF COMPACTED FILL	CONTINUOUS	
5	PRIOR TO PLACEMENT OF COMPACTED FILL, OBSERVE SUBGRADE AND VERIFY THAT THE SITE HAS BEEN PREPARED PROPERLY.	PERIODIC	

NOT FOR CONSTRUCTION PRELIMINARY STATE OF ALASKA DANIEL N. BOLLES 49TH 07.10.2023

ROHDE ARCHITECTS
Architecture Planning Design/Build
11925 Old Glenn Hwy., Suite 201, Eagle River, AK 99577
Ph. (907)868-2366
ARohde@rohdearchitects.Com Corp. Auth. #AECC769

NO.	REVISION

CHUGACH TRAINING BUILDING
9312 VANGAURD DRIVE
ANCHORAGE, ALASKA 99507

JOB NO.	231079
DATE	07.10.2023
DRAWN	JJL
REVIEWED	DNB

SHEET TITLE: SPECIAL INSPECTIONS

SHEET NO. S1.11

65% SUBMITTAL

IF THIS SHEET IS LESS THAN: 22"X34" IT IS A REDUCED PRINT
- DO NOT SCALE DIMENSIONS FROM BLUEPRINTS -

7/19/2023 4:42:05 PM C:\Users\jlobdell\Documents\231079 Chugach School District Training Facilities v24_JlobdellHPSR6.rvt

THIS SHEET IS FULL SIZE AT 34"x22"

1" ACTUAL

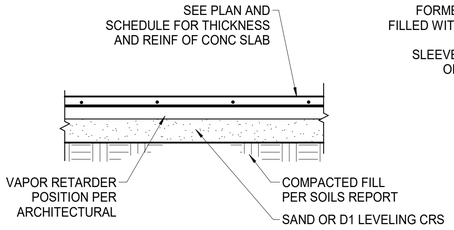

TYPICAL INTERIOR SLAB ON GRADE

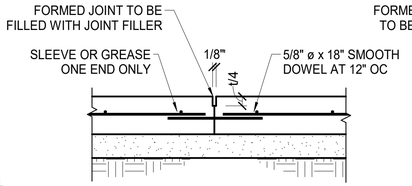

TYPICAL SLAB CONSTRUCTION JOINTS

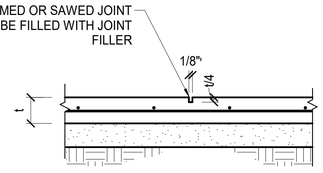

TYPICAL SLAB CONTROL JOINT

1 TYPICAL SLAB JOINTS

3/4" = 1'-0"

SPREAD FOOTING REINFORCING SCHEDULE

MARK	FTG SIZE	FTG DEPTH	T.O.F. ELEV.	TOP MAT REINFORCING	BOTTOM MAT REINFORCING
F3	3'-0"x3'-0"	12"	SEE PLAN		(3) #5 EA. WAY

NOTES:

STRIP FOOTING REINFORCING SCHEDULE

MARK	FTG WIDTH	FTG DEPTH	T.O.F. ELEV.	LONGITUDINAL REINFORCING	TRANSVERSE REINFORCING
SF3	3'-0"	12"	-2' - 8"	(4) #5 AT MID HEIGHT	#5 AT 12" OC
SF7	7'-0"	24"	-2' - 8"	(7) #7 TOP & BOTTOM	#7 AT 12" OC

NOTES:

SLAB REINFORCING SCHEDULE

THICKNESS	TYPE	REINFORCING	CONCRETE COVER
4"	ON GRADE	#3 @ 16" OC EACH WAY	2" FROM TOP

ACI STANDARD 90° HOOK DIMENSIONS

BAR SIZE	#3	#4	#5	#6	#7	#8	#9
MIN. BEND DIAM. (d)	2 1/4"	3"	3 3/4"	4 1/2"	5 1/4"	6"	
EXTENSION LENGTH (L)	6"	6"	8"	9"	11"	12"	

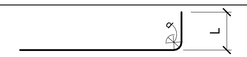

NOTE: REFERENCE ACI 318-14 SEC. 25.3

LAP SPLICES IN WALLS, FOOTINGS AND SLABS-ON-GRADE (3000 PSI)

BAR SIZE	#3	#4	#5	#6	#7	#8		
CLASS B SPLICE	22"	29"	36"	43"	63"	72"		

NOTE: INCREASE TABULATED LAP LENGTH BY 20% FOR BUNDLES OF 3 BARS.

REINFORCING CLEARANCE/COVER

EXPOSURE CONDITION		MIN. COVER	TOLERANCE*
CAST AGAINST AND PERMANENTLY EXPOSED TO EARTH		3"	-3/8", +1"
EXPOSED TO EARTH OR WEATHER	#5 AND SMALLER BARS:	1 1/2"	-1/4", +1/2"
	#6 AND LARGER BARS:	2"	-1/4", +1/2"
NOT EXPOSED TO EARTH, WEATHER OR IN CONTACT WITH GROUND:		3/4"	-1/4", +3/8"
TIES AND STIRRUPS		1 1/2"	-1/4", +1/2"

NOTES: "-" INDICATES TOLERANCE DECREASE TOWARDS MEMBER FACE. "+" INDICATES AWAY FROM MEMBER FACE.

65% SUBMITTAL

IF THIS SHEET IS LESS THAN: 22"X34" IT IS A REDUCED PRINT
- DO NOT SCALE DIMENSIONS FROM BLUEPRINTS -

7/19/2023 4:42:05 PM C:\Users\jlobdell\Documents\231079 Chugach School District Training Facilities v24_jlobdellHPSRR.rvt

NOT FOR CONSTRUCTION
PRELIMINARY
STATE OF ALASKA
49TH
07.10.2023

ROHDE ARCHITECTS
Design/Build
Architecture Planning
11925 Old Glenn Hwy., Suite 201, Eagle River, AK 99577
ph. (907)868-2366
ARohde@rohdearchitects.Com Corp. Auth. #AECC769

NO.	REVISION

CHUGACH TRAINING BUILDING
9312 VANGAURD DRIVE
ANCHORAGE, ALASKA 99507

JOB NO.	231079
DATE	07.10.2023
DRAWN	JJL
REVIEWED	DNB

SHEET TITLE:
CONCRETE REINFORCING SCHEDULES AND TYPICAL DETAILS

SHEET NO.
S1.21

THIS SHEET IS FULL SIZE AT 34"x22"

1" ACTUAL

MASONRY WALL REINFORCING SCHEDULE

MARK	WALL t	WALL TYPE	GROUTING	VERTICAL REINFORCING	HORIZONTAL REINFORCING
M8	8"	8"x16" CMU	ALL CELLS	#5 AT 16" OC CENTERED	#5 AT 16" OC CENTERED w/ ADDITIONAL BARS AT FLOOR AND ROOF LEVELS AND AT TOP OF WALLS.

NOTES:

VERTICAL WALL REINFORCING SHALL BE HELD IN PLACE BY BAR POSITIONERS. SEE DIAGRAMS FOR POSITIONING AND CLEARANCE OF VERTICAL BARS.

MASONRY SHEAR PIER REINFORCING SCHEDULE

MARK	WALL t	WALL TYPE	GROUTING	PIER LENGTH	VERT. BOUNDARY REINF.	VERTICAL REINFORCING	HORIZONTAL REINFORCING
MP1	8"	8"x16" CMU	ALL CELLS	3' - 5"	(1) #5 BARS EA. END	#5 AT 8" OC CENTERED	#5 AT 8" OC CENTERED

NOTES:

VERTICAL WALL REINFORCING SHALL BE HELD IN PLACE BY BAR POSITIONERS. SEE DIAGRAMS FOR POSITIONING AND CLEARANCE OF BARS.

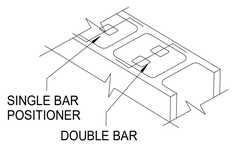

NOTE:
1) PROVIDE GALVANIZED 9 GAGE POSITIONER AT ALL VERTICAL REINFORCING BARS. LOCATE POSITIONERS AT SECOND COURSE FROM TOP AND BOTTOM OF WALL AND AT MAXIMUM VERTICAL SPACING OF 8'-0"

2) TIE HORIZONTAL BARS TO VERTICAL BARS WITH VERTICAL BAR SPACING FROM CORNERS AND AT A MAXIMUM HORIZONTAL SPACING OF 8'-0"

1 BAR POSITIONERS
3/4" = 1'-0"

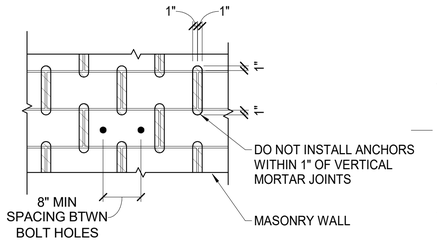

NOTES:
1. INSTALL ANCHOR ACCORDING TO MANUFACTURER'S PUBLISHED PROCEDURES
2. SPECIAL INSPECTION REQUIRED PER SPECIAL INSPECTION SCHEDULES, ICC REPORTS AND THE IBC.

EMBEDDED BOLTS ELEVATION

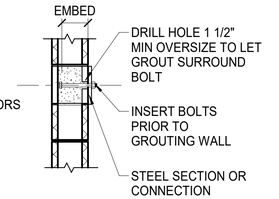

EMBEDDED BOLTS

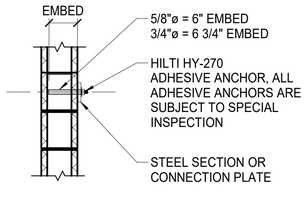

NOTES:
1. INSTALL ACCORDING TO MANUFACTURER'S PUBLISHED PROCEDURES.

ADHESIVE ANCHORS

2 BOLTS IN CMU
3/4" = 1'-0"

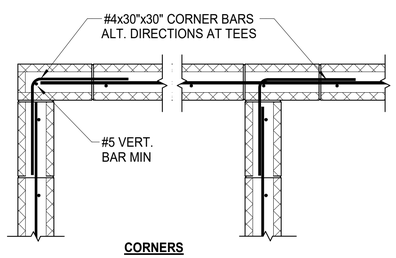

CORNERS

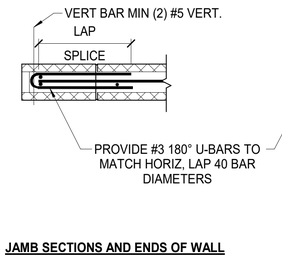

JAMB SECTIONS AND ENDS OF WALL

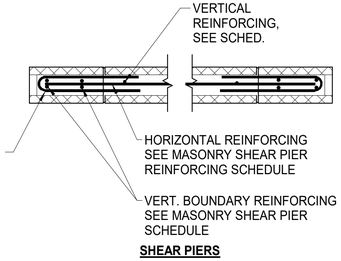

SHEAR PIERS

SINGLE CURTAIN PLAN - 8" WALLS

3 TYPICAL MASONRY CORNER REINFORCING
3/4" = 1'-0"

65% SUBMITTAL

IF THIS SHEET IS LESS THAN: 22"X34" IT IS A REDUCED PRINT
- DO NOT SCALE DIMENSIONS FROM BLUEPRINTS -

ROHDE ARCHITECTS
Architecture Planning Design/Build
1925 Old Glenn Hwy., Suite 201, Eagle River, AK 99577
Ph. (907)868-2366
ARohde@RohdeArchitects.Com Corp. Auth. #AECC769

NO.	REVISION

NOT FOR CONSTRUCTION
PRELIMINARY
STATE OF ALASKA
JAMES L. LOBDELL
49TH
07.10.2023

CHUGACH TRAINING BUILDING
9312 VANGAURD DRIVE
ANCHORAGE, ALASKA 99507

JOB NO.	231079
DATE	07.10.2023
DRAWN	JJL
REVIEWED	DNB

SHEET TITLE:
MASONRY SCHEDULES AND TYPICAL DETAILS

SHEET NO.
S1.31

7/19/2023 4:42:05 PM C:\Users\jlobdell\Documents\231079 Chugach School District Training Facilities v24_jlobdellHPSRR.rvt

THIS SHEET IS FULL SIZE AT 34"x22"

1" ACTUAL

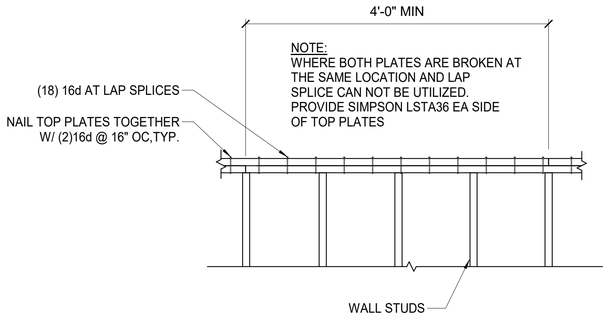

1 TYPICAL TOP PLATE SPLICE

3/4" = 1'-0"

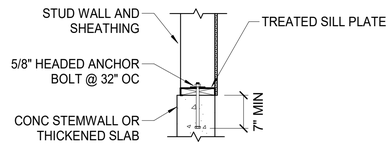

NOTE:

1. ANCHOR SIZE AND SPACING AND SILL PLATE SIZE SPECIFIED THIS DETAIL FOR ALL NON-SHEAR STRUCTURAL BEARING WALLS. SIZE AND SPACING FOR SHEAR WALLS CAN BE FOUND IN THE SHEAR WALL SCHEDULE.
2. ALL ANCHORS SHALL BE HOT-DIPPED GALVANIZED ASTM A307 BOLTS OR THREADED RODS.
3. ALL ANCHORS SHALL HAVE A GALV STD WASHER BETWEEN SILL PLATE AND NUT.
4. ALL ANCHORS SHALL BE PLACED A MINIMUM OF 3" AWAY FROM EDGE OF CONC AND LOCATED NO CLOSER THAN 6" FROM END OF WALL.

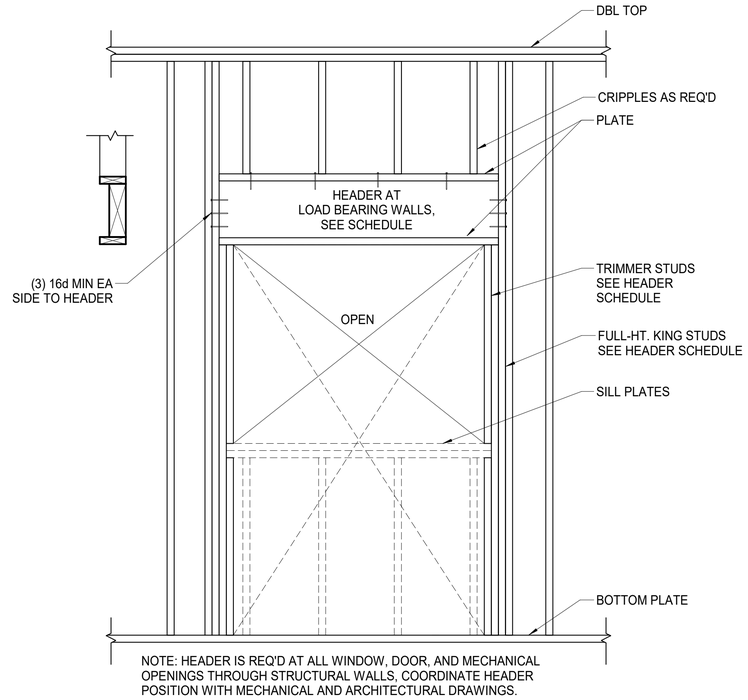

NOTE: HEADER IS REQ'D AT ALL WINDOW, DOOR, AND MECHANICAL OPENINGS THROUGH STRUCTURAL WALLS, COORDINATE HEADER POSITION WITH MECHANICAL AND ARCHITECTURAL DRAWINGS.

HEADER SCHEDULE

MARK	SIZE	TRIMMER STUDS	KING STUDS	NOTES
H1	4x12	(2) 2x6	(2) 2x6	

NOTE: ALL HEADERS ARE LOCATED AT THE TOP OF OPENING.

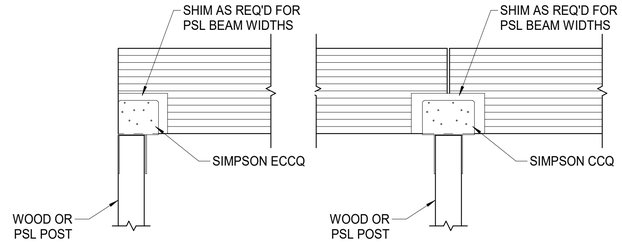

2 TYP SILL PL ANCHOR - NON SHEAR WALL

3/4" = 1'-0"

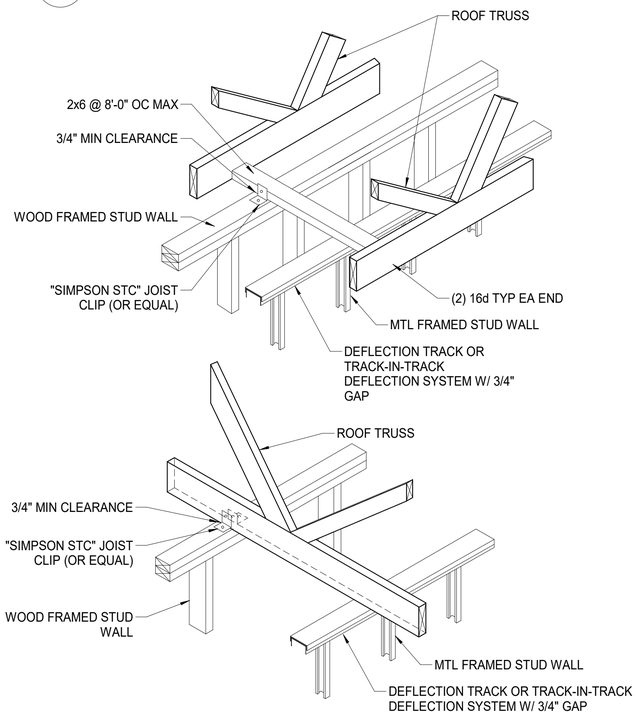

3 TYPICAL HEADER DETAIL

3/4" = 1'-0"

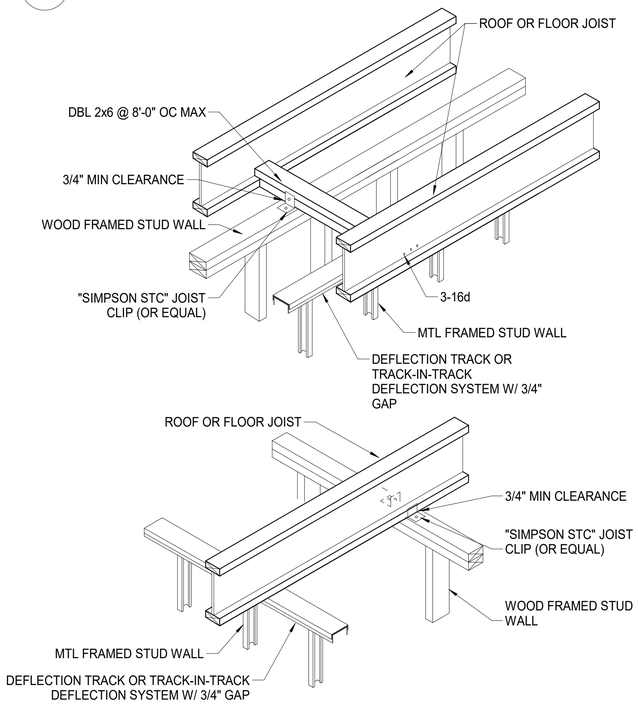

4 TYPICAL TIMBER POST CAP DETAIL

3/4" = 1'-0"

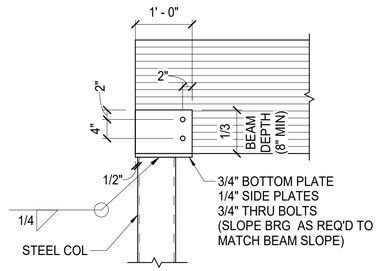

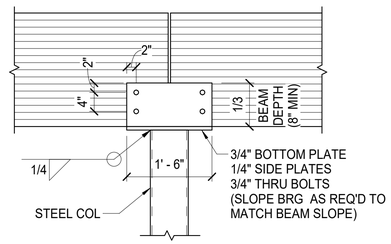

5 NON-BEARING PARTITION DETAILS

3/4" = 1'-0"

6 NON-BEARING PARTITION DETAILS

3/4" = 1'-0"

7 TYPICAL GLB COLUMN CAPS

3/4" = 1'-0"

65% SUBMITTAL

IF THIS SHEET IS LESS THAN: 22"X34" IT IS A REDUCED PRINT
- DO NOT SCALE DIMENSIONS FROM BLUEPRINTS -

ROHDE ARCHITECTS
Architecture Planning Design/Build
1925 Old Glenn Hwy., Suite 201, Eagle River, AK 99577
Ph. (907)868-2360
ARohde@RohdeArchitects.Com Corp. Auth. #AECC769

NO. REVISION

CHUGACH TRAINING BUILDING
9312 VANGAURD DRIVE
ANCHORAGE, ALASKA 99507

JOB NO.	231079
DATE	07.10.2023
DRAWN	JJL
REVIEWED	DNB

SHEET TITLE:
WOOD FRAMING SCHEDULES AND TYPICAL DETAILS

SHEET NO.
S1.41

7/19/2023 4:42:05 PM C:\Users\jlobdell\Documents\231079 Chugach School District Training Facilities v24_JlobdellHPSRR.rvt

THIS SHEET IS FULL SIZE AT 34"x22" | 1" ACTUAL

WOOD SHEAR WALL SCHEDULE

MARK	LEVEL	WOOD PANELS			NAIL SIZE	NAIL SPACING		PANEL JOINT STUDS	BOTTOM PLATE ATTACHMENT					SILL OR BOTTOM PLATE ATTACHMENT					
		APA Grade	Thick.	Span rating		Edges	Field		Fastener	Detail	Dia.	Spacing	Embed.	Fastener	Detail	Dia.	Spacing	Embed.	Washer
6	1	Sheathing	19/32"	32/16	10d	6"	12"	2x	NA	-	-	-	-	Anchor Rod	-	3/4"	32"	8"	DETAIL 6
6*	1	Sheathing	19/32"	32/16	10d	6"	12"	2x	16D NAIL	-	.148	4"	2"	Anchor Rod	-	3/4"	16"	8"	DETAIL 6
4	1	Sheathing	19/32"	32/16	10d	4"	12"	2x	NA	-	-	-	-	Anchor Rod	-	3/4"	32"	8"	DETAIL 6
3	1	Sheathing	19/32"	32/16	10d	3"	12"	3x	NA	-	-	-	-	Anchor Rod	-	3/4"	8"	8"	DETAIL 6

NOTES:
1. WOOD STRUCTURAL PANELS SHALL CONFORM TO THE REQUIREMENTS FOR ITS TYPE IN DOC PS1 OR PS2.
2. APPLY SHEATHING TO THE SIDE OF WALL INDICATED BY THE SYMBOL. PANELS MAY BE INSTALLED HORIZONTALLY OR VERTICALLY. DOUBLE SHEATHED WALLS SHALL HAVE PANELS APPLIED TO BOTH FACES.
3. ALL PANEL EDGES SHALL BE LOCATED ON STUDS, BLOCKING LAID FLAT, PLATES OR RIM JOISTS. WHERE SHEATHING IS APPLIED TO BOTH FACES OF WALL, OFFSET PANEL EDGES TO FALL ON DIFFERENT STUDS.
4. STAGGER PANEL EDGE NAILING AT PANEL JOINTS.
5. ANCHOR RODS SHALL BE HOT-DIPPED GALVANIZED ASTM A307 HEADED BOLTS. FIRST AND LAST ANCHORS SHALL BE LOCATED 6" FROM END OF EACH WALL SEGMENT OR END WALL HOLDOWN.
6. SEE TYPICAL PLATE WASHER DETAIL FOR SILL PLATE ANCHOR INSTALL AND LOCATION REQUIREMENTS.
7. SEE HOLDOWN SCHEDULE FOR HOLDOWNS AND BOUNDARY POST SIZES.
8. IN LIEU OF 3X PANEL EDGE STUDS, DBL 2x STUDS MAY BE USED. FASTEN DBL STUDS TOGETHER WITH 16d FACE NAILS STAGGERED @ 6" OC
9. ANCHOR ROD EMBEDMENT IS THE DISTANCE FROM TOP OF CONCRETE TO TOP OF NUT OR BOLT HEAD.

WOOD DIAPHRAGM SCHEDULE

AREA DESCRIPTION	SHEATHING			NAIL SIZE	NAIL SPACING			NOMINAL THICKNESS OF FRAMING MEMBERS	PANEL EDGE BLOCKING
	APA Grade	Thick.	Span Rating		Edges (2,3)	Boundary	Field		
ROOF	Sheathing	19/32"	48/24	10d	6"	6"	12"	2x	NONE
MEZZ	Sheathing	23/32"	24/16	10d	6"	6"	12"	2x	NONE

NOTES:
1. APPLY SHEATHING PERPENDICULAR TO FRAMING MEMBERS UNLESS NOTED OTHERWISE.
2. LOCATE PANEL ENDS OVER FRAMING MEMBERS AND STAGGER LOCATION OF ENDS JOINTS BY A MINIMUM OF 2'-0" UNLESS SHOWN OTHERWISE.
3. SEE SCHEDULE FOR PANEL EDGE BLOCKING REQUIREMENTS.
4. STAGGER PANEL EDGE NAILING AT BLOCKED JOINTS.
5. NAILS SHALL BE LOCATED AT LEAST 3/8" FROM THE EDGES OF PANELS. HEADS OF NAILS SHALL BE DRIVEN FLUSH WITH THE SURFACE.
6. PANELS SHALL NOT BE LESS THAN 4' x 8' EXCEPT AT BOUNDARIES AND CHANGES IN FRAMING WHERE ALL EDGES ARE SUPPORTED BY AND FASTENED TO FRAMING MEMBERS OR BLOCKING.

HOLDOWN SCHEDULE

MARK	HOLDOWN	ANCHOR ROD		BOUNDARY POST SIZE	COMMENTS
		Diam.	Embed.		
CS14	CS14	NA	NA	(2) 2x6	SEE 3 / S1.42
HD5	SIMPSON HDU-5	5/8"	12"	(2) 2x6	
HD8	SIMPSON HDU-8	7/8"	18"	(2) 2x6	
HD14	SIMPSON HDU-14	1"	20"	6x6	

NOTES:
1. HOLDOWNS ARE SIMPSON STRONG-TIE OR EQUAL.
2. ANCHOR RODS SHALL BE GALVANIZED ASTM F1554 GRADE 36 HEADED BOLTS OR ASTM A36 THREADED ROD WITH DBL NUT AT BOTTOM.
3. ROD COUPLERS WITH 125% STRENGTH OF THE ROD MAY BE USED TO EXTEND RODS.
4. BOUNDARY POSTS LARGER THAN (2) 2x6 ARE DF No. 1. UNO. (2) 2x6 POST, HEM-FIR #2 ACCEPTABLE

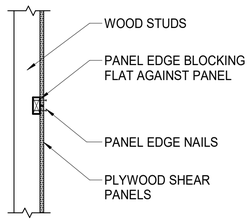

1 PANEL EDGE BLOCKING
3/4" = 1'-0"

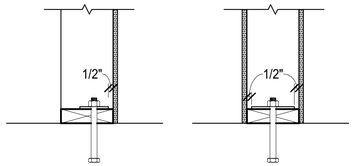

SINGLE-SIDED SHEAR WALL | DOUBLE SIDED SHEAR WALL

NOTE: 0.229"x3"x3" MIN SIZE PLATE WASHER TO BE USED FOR EACH SILL PLATE ATTACHMENT BOLT. PLATE WASHER MUST BE WITHIN 1/2" OF SHEATHING FACE. SLOTTED HOLE IN PLATE WASHER PER AWC MAY BE USED PROVIDED A STD CUT WASHER BE PLACED BETWEEN PLATE WASHER AND NUT.

2 TYP SILL PL ANCHOR - SHEAR WALLS
1 1/2" = 1'-0"

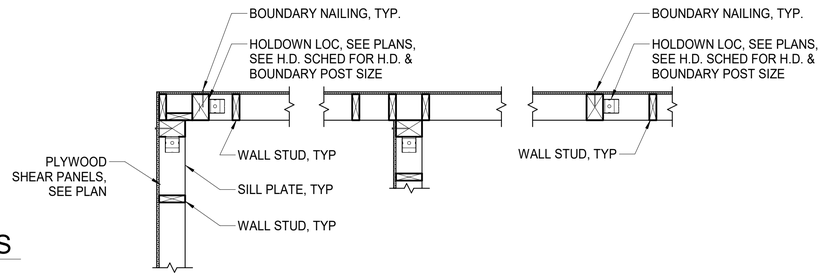

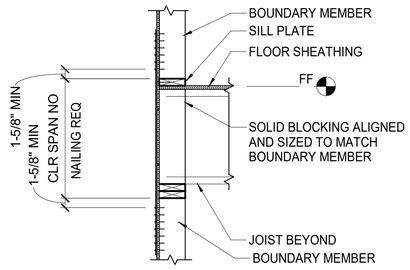

SIDE WALLS

3 TYP HD STRAP DETAIL (EXT WALLS)
3/4" = 1'-0"

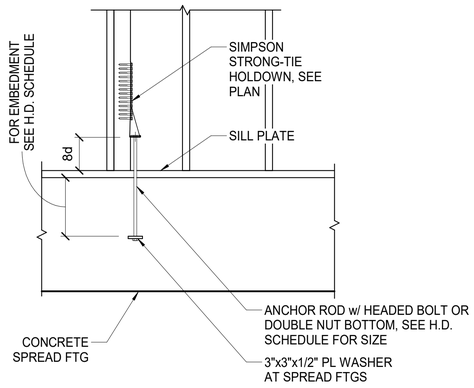

4 TYPICAL HOLDOWN DETAIL AT FOUNDATION
3/4" = 1'-0"

NOTES:
1. PANELS ARE SHOWN VERTICAL, BUT MAY BE PLACED HORIZONTAL.
2. MIN. EDGE DISTANCE FOR NAILS SHALL BE 3/8".
3. MIN. SHEATHING SHEET SIZE SHALL BE 2'-0"x4'-0".
4. NAILS SHALL NOT BE OVERDRIVEN.
5. NAILS SHALL BE COMMON WIRE TYPE OR APPROVED EQUAL.

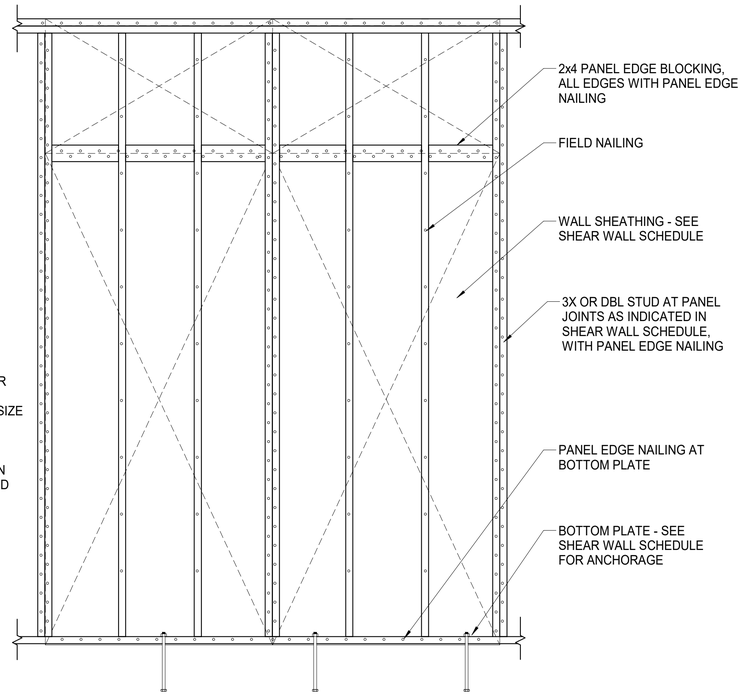

5 SHEAR WALL NAILING DETAIL
3/4" = 1'-0"

65% SUBMITTAL

IF THIS SHEET IS LESS THAN: 22"X34" IT IS A REDUCED PRINT
- DO NOT SCALE DIMENSIONS FROM BLUEPRINTS -

NOT FOR CONSTRUCTION - PRELIMINARY - STATE OF ALASKA - 49TH - 07.10.2023

ROHDE ARCHITECTS
Design/Build
Architecture Planning
11925 Old Glenn Hwy., Suite 201, Eagle River, AK 99577
Ph. (907)868-2366
ARohde@RohdeArchitects.Com Corp. Auth. #AECC769

NO. | REVISION

CHUGACH TRAINING BUILDING
9312 VANGAURD DRIVE
ANCHORAGE, ALASKA 99507

JOB NO.	231079
DATE	07.10.2023
DRAWN	JJL
REVIEWED	DNB

SHEET TITLE:
WOOD PANEL SHEAR WALL SCHEDULES AND TYPICAL DETAILS

SHEET NO.
S1.42

7/19/2023 4:42:05 PM C:\Users\jlobdell\Documents\231079 Chugach School District Training Facilities v24_JlobdellHPSRR.rvt

1" ACTUAL

THIS SHEET IS FULL SIZE AT 34"X22"



1 FOUNDATION PLAN

1/4" = 1'-0"

FOUNDATION SHEET NOTES

1. REFERENCE ELEVATION - TOP OF CONCRETE SLAB ELEVATION = EL. 0'-0". SEE CIVIL FOR ACTUAL ELEVATION.
2. UNLESS NOTED OTHERWISE, ALL STRIP FOOTINGS ON THIS SHEET ARE 3'-0" WIDE (SF3), AND TOP OF STRIP FOOTING ELEVATION = -2'-8" UNO. SEE S1.21 FOR FOOTING SCHEDULE.
3. UNLESS NOTED OTHERWISE, TOP OF SPREAD FOOTING ELEVATION = 0'-0". SEE S1.21 FOR FOOTING SCHEDULE.
4. ALL STEM WALLS ON THIS SHEET ARE 8" FULLY GROUTED CMU (M8) UNLESS NOTED OTHERWISE.

LEGEND

- INDICATES TOP OF CMU WALL
- ⚠ INDICATES SHEAR WALL TYPE, SEE S1.42
- HD? INDICATES HOLD DOWN TYPE, SEE S1.42
- ?? INDICATES WALL TYPE

NOT FOR CONSTRUCTION
PRELIMINARY
STATE OF ALASKA
JAMES L. LOBDELL
49TH
07.10.2023

ROHDE ARCHITECTS
Design/Build
Architecture Planning
11925 Old Glenn Hwy., Suite 201, Eagle River, AK 99577
Ph. (907)868-2366
AKrohde@RohdeArchitects.Com Corp. Auth. #AECC769

NO.	REVISION

CHUGACH TRAINING BUILDING

9312 VANGAURD DRIVE
ANCHORAGE, ALASKA 99507

JOB NO.	231079
DATE	07.10.2023
DRAWN	JJL
REVIEWED	DNB

SHEET TITLE: FOUNDATION PLAN

SHEET NO. S2.0

65% SUBMITTAL

IF THIS SHEET IS LESS THAN: 22"X34" IT IS A REDUCED PRINT
- DO NOT SCALE DIMENSIONS FROM BLUEPRINTS -

7/19/2023 4:42:06 PM C:\Users\jlobdell\Documents\231079 Chugach School District Training Facilities v24_jlobdellHPSRR.rvt

THIS SHEET IS FULL SIZE AT 34"x22"

1" ACTUAL

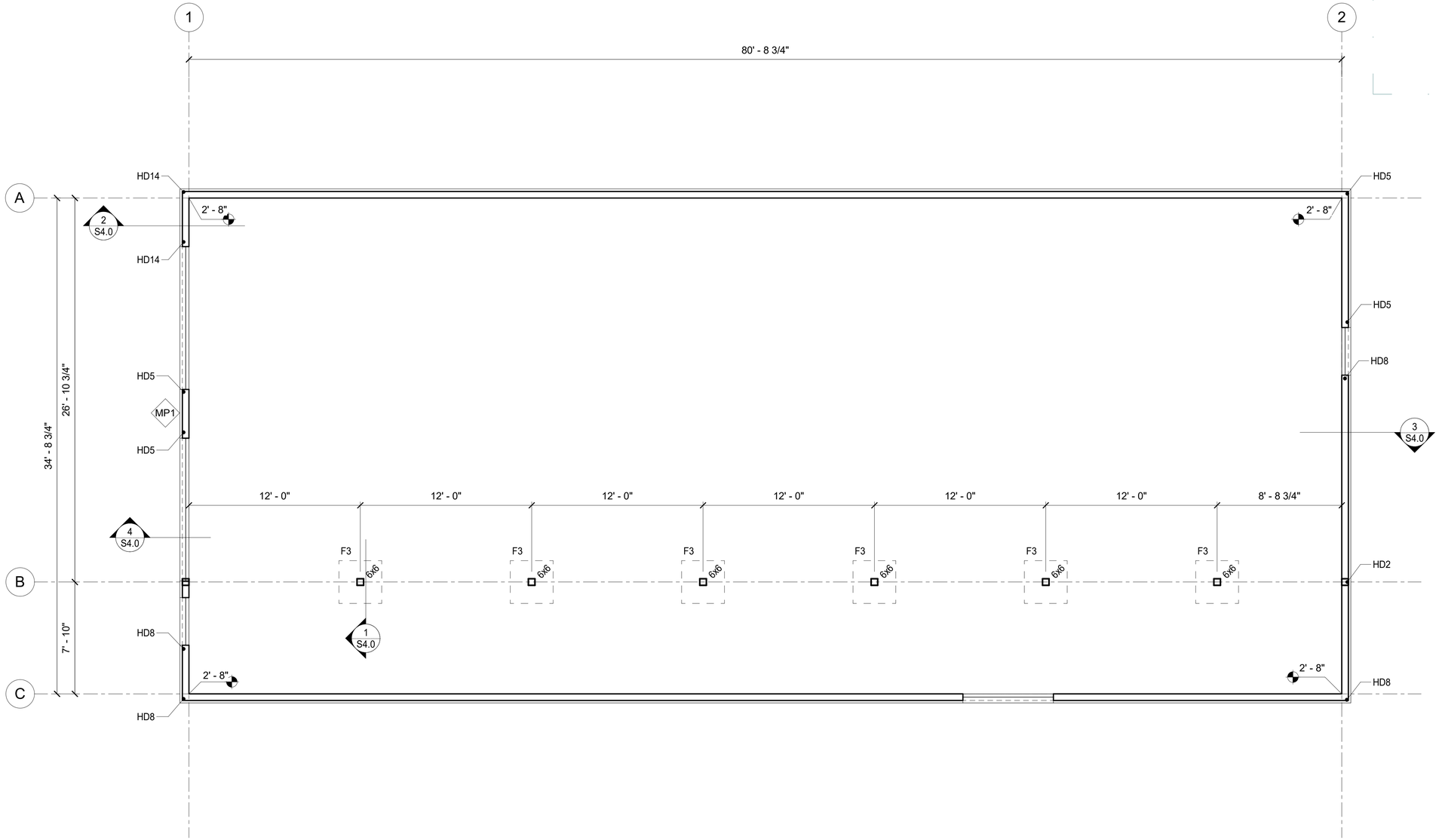

1 FIRST FLOOR PLAN

1/4" = 1'-0"

SLAB PLAN SHEET NOTES

1. REFERENCE ELEVATION - TOP OF CONCRETE SLAB ELEVATION = EL. 0'-0".
2. INSTALL CONTROL / CONSTRUCTION JOINTS AS SHOWN.
3. UNLESS NOTED OTHERWISE, TOP OF SPREAD FOOTING ELEVATION = 0'-0". SEE S1.21 FOR FOOTING SCHEDULE.

LEGEND

- INDICATES TOP OF CMU WALL
- ⚠ INDICATES SHEAR WALL TYPE, SEE S1.42
- HD? INDICATES HOLD DOWN TYPE, SEE S1.42
- ?? INDICATES WALL TYPE

NOT FOR CONSTRUCTION
PRELIMINARY
STATE OF ALASKA
49TH
07.10.2023

ROHDE ARCHITECTS
Design/Build
Architecture
Planning
11925 Old Glenn Hwy., Suite 201, Eagle River, AK 99577
Ph. (907)868-2360
AKrohde@RohdeArchitects.Com Corp. Auth. #AECC769

NO.	REVISION

CHUGACH TRAINING BUILDING

9312 VANGAURD DRIVE
ANCHORAGE, ALASKA 99507

JOB NO.	231079
DATE	07.10.2023
DRAWN	JJL
REVIEWED	DNB

SHEET TITLE: SLAB PLAN

SHEET NO. S2.1

65% SUBMITTAL

IF THIS SHEET IS LESS THAN: 22"X34" IT IS A REDUCED PRINT
- DO NOT SCALE DIMENSIONS FROM BLUEPRINTS -

7/19/2023 4:42:06 PM C:\Users\JJobdell\Documents\231079 Chugach School District Training Facilities v24_JJobdellHPSRR.rvt

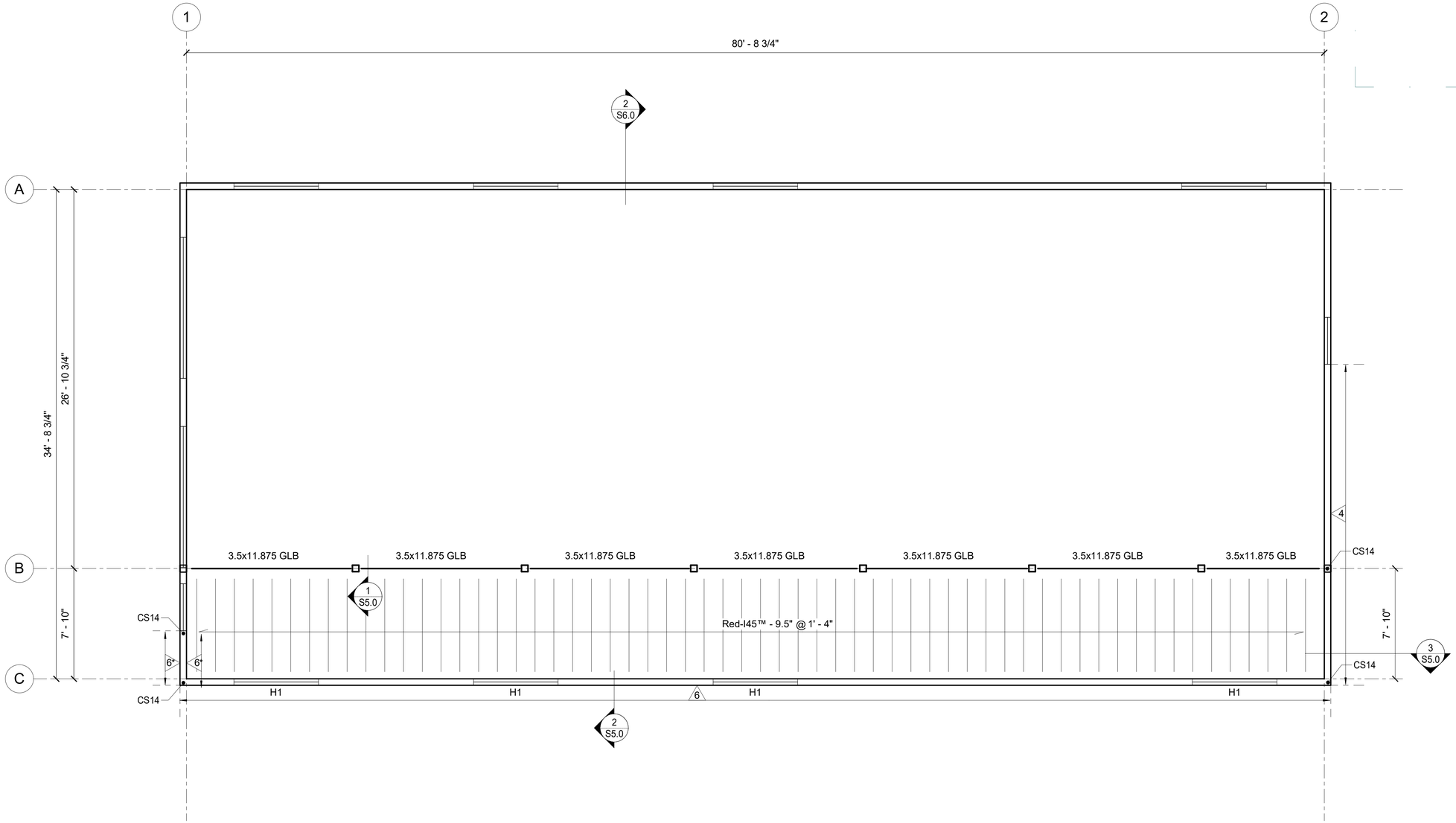

1 MEZZANINE PLAN

1/4" = 1'-0"

SHEET NOTES

1. FLOOR SHEATHING IS 3/4" T&G PLYWOOD. ORIENT PANELS PERPENDICULAR TO FRAMING MEMBERS. SEE DIAPHRAGM SCHEDULE FOR BLOCKING AND NAILING REQUIREMENTS AT PANEL JOINTS.
2. SEE SECTIONS FOR FLOOR ELEVATIONS.
3. ALL I-JOIST ARE REDBUILT SERIES 45 OOR APPROVED EQUIV.
4. ALL WOOD WALLS ON THIS SHEET ARE 2x6 (W6) UNLESS NOTED OTHERWISE
5. ALL CMU WALLS ON THIS SHEET ARE 8" FULLY GROUTED CMU (M8) UNLESS NOTED OTHERWISE
6. UNLESS NOTED OTHERWISE TOP OF ALL CMU STEM WALLS IS 2' - 8" UNLESS NOTED OTHERWISE

LEGEND

- INDICATES TOP OF CMU WALL
- ? INDICATES SHEAR WALL TYPE, SEE S1.42
- HD? INDICATES HOLD DOWN TYPE, SEE S1.42
- ?? INDICATES WALL TYPE

65% SUBMITTAL

IF THIS SHEET IS LESS THAN: 22"X34" IT IS A REDUCED PRINT
- DO NOT SCALE DIMENSIONS FROM BLUEPRINTS -

STATE OF ALASKA
49TH
PRELIMINARY
NOT FOR CONSTRUCTION
07.10.2023

ROHDE ARCHITECTS
Architecture Planning Design/Build
11925 Old Glenn Hwy., Suite 201, Eagle River, AK 99577
ph. (907)696-2960
ARohde@RohdeArchitects.Com Corp. Auth. #AECC769

NO.	REVISION

CHUGACH TRAINING BUILDING

9312 VANGAURD DRIVE
ANCHORAGE, ALASKA 99507

JOB NO.	231079
DATE	07.10.2023
DRAWN	JJL
REVIEWED	DNB

SHEET TITLE:
MEZZANINE FRAMING PLAN

SHEET NO.
S2.2

7/19/2023 4:42:06 PM C:\Users\jlobdell\Documents\231079 Chugach School District Training Facilities v24_jlobdellHPSRR.rvt

THIS SHEET IS FULL SIZE AT 34"x22"

1" ACTUAL

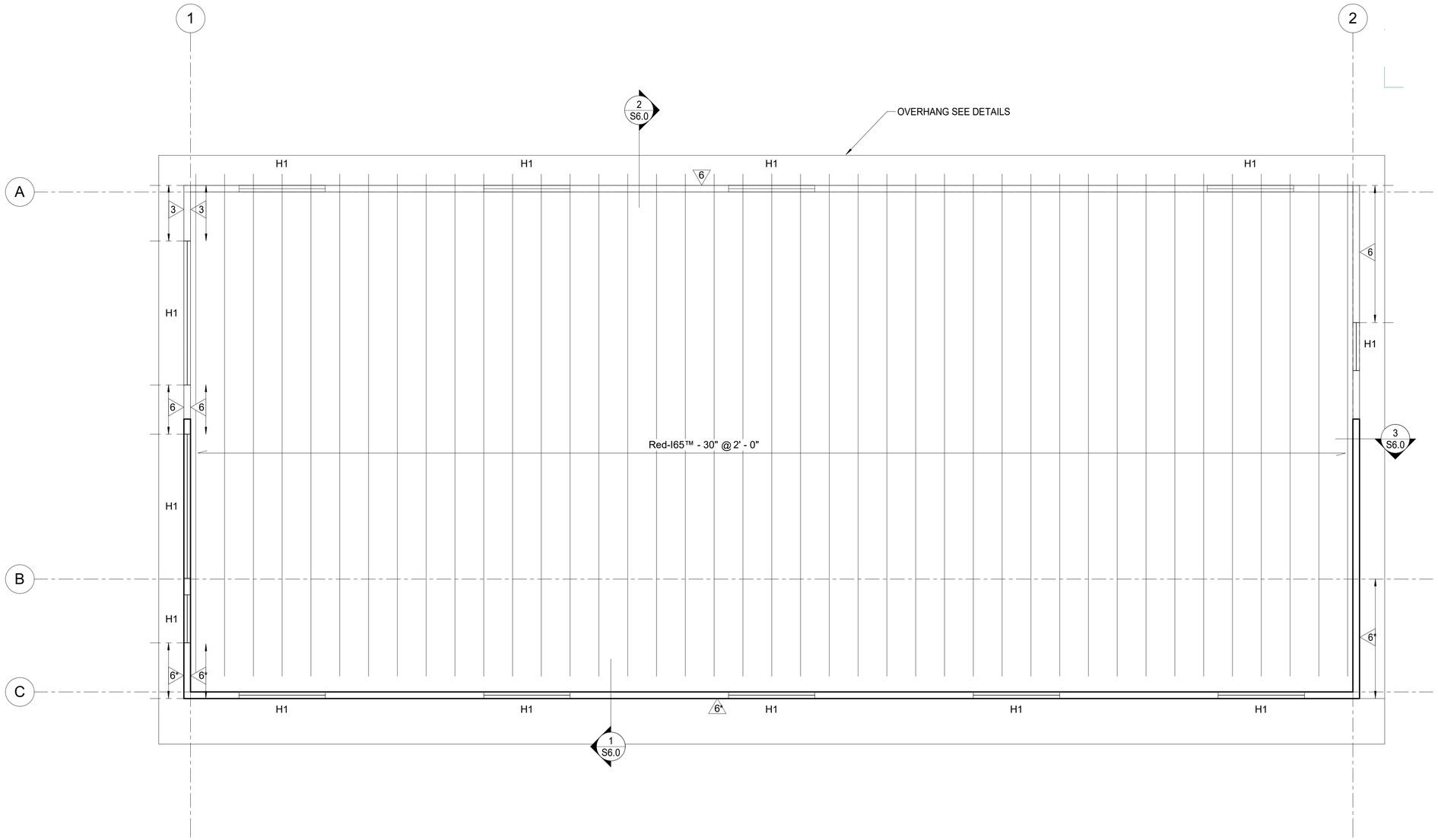

1 ROOF PLAN

1/4" = 1'-0"

SHEET NOTES

1. ROOF SHEATHING IS 3/4" PLYWOOD. ORIENT PANELS PERPENDICULAR TO FRAMING MEMBERS. SEE DIAPHRAGM SCHEDULE FOR BLOCKING AND NAILING REQUIREMENTS AT PANEL JOINTS.
2. SEE SECTIONS FOR ROOF ELEVATIONS.
3. ALL I-JOIST ARE REDBUILT SERIES 65 OR APPROVED EQUIV.

LEGEND

- INDICATES TOP OF CMU WALL
- ? — INDICATES SHEAR WALL TYPE, SEE S1.42
- HD? — INDICATES HOLD DOWN TYPE, SEE S1.42
- ?? — INDICATES WALL TYPE

NOT FOR CONSTRUCTION
PRELIMINARY
STATE OF ALASKA
JAMES J. LOBDELL
49TH
07.10.2023

ROHDE ARCHITECTS
Design/Build
Architecture
Planning
11925 Old Glenn Hwy., Suite 201, Eagle River, AK 99577
Ph. (907)868-2360
AKRohde@RohdeArchitects.Com Corp. Auth. #AECC769

NO.	REVISION

CHUGACH TRAINING BUILDING

9312 VANGAURD DRIVE
ANCHORAGE, ALASKA 99507

JOB NO.	231079
DATE	07.10.2023
DRAWN	JJL
REVIEWED	DNB

SHEET TITLE:
ROOF FRAMING PLAN

SHEET NO.
S2.3

65% SUBMITTAL

IF THIS SHEET IS LESS THAN: 22"X34" IT IS A REDUCED PRINT
- DO NOT SCALE DIMENSIONS FROM BLUEPRINTS -

7/19/2023 4:42:06 PM C:\Users\jlobdell\Documents\231079 Chugach School District Training Facilities v24_jlobdellHPSRR.rvt

THIS SHEET IS FULL SIZE AT 34"x22"

1" ACTUAL

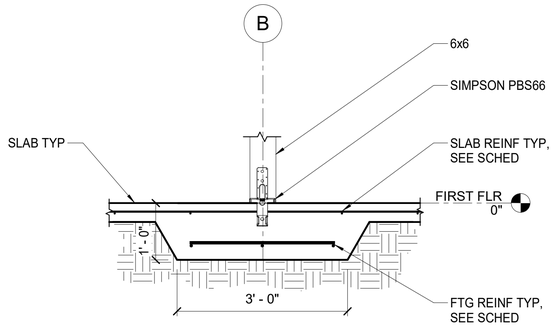

1 INTERIOR POST BASE
3/4" = 1'-0"

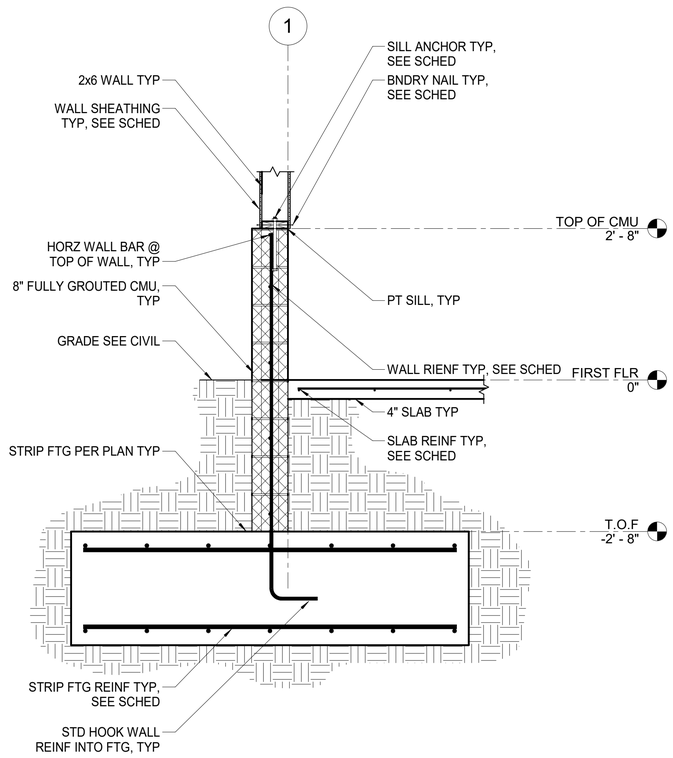

2 SECTION AT SF7 TYP
3/4" = 1'-0"

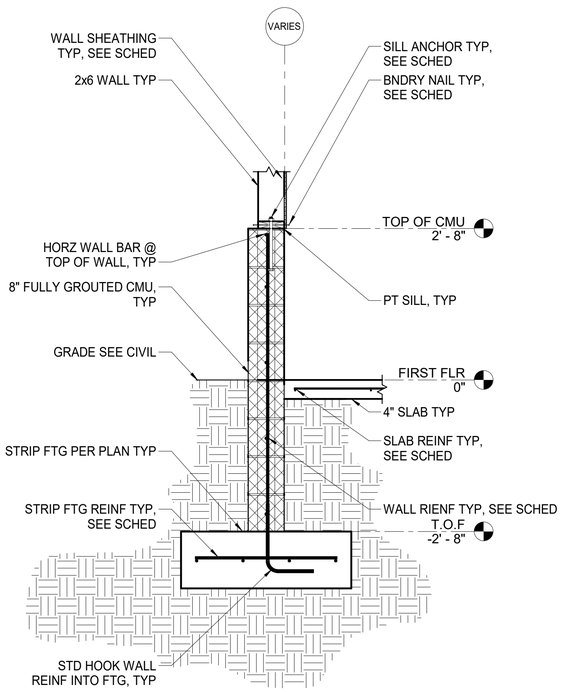

3 SECTION AT SF2 TYP
3/4" = 1'-0"

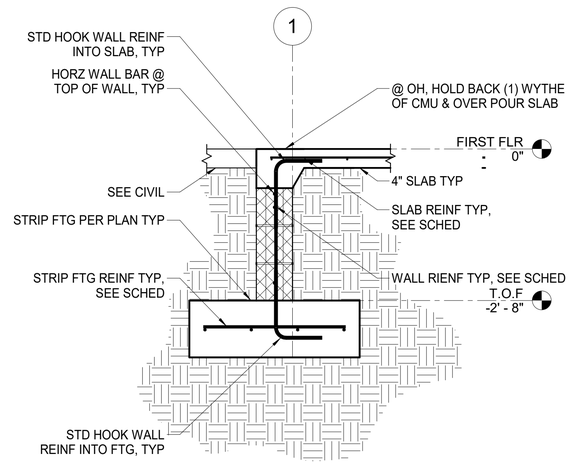

4 STEM WALL AT OH DOOR TYP
3/4" = 1'-0"

65% SUBMITTAL

IF THIS SHEET IS LESS THAN: 22"X34" IT IS A REDUCED PRINT
- DO NOT SCALE DIMENSIONS FROM BLUEPRINTS -

NOT FOR CONSTRUCTION
PRELIMINARY
STATE OF ALASKA
JAMES J. LOBDELL
49TH
07.10.2023

ROHDE ARCHITECTS
Architecture Planning Design/Build
1925 Old Glenn Hwy., Suite 201, Eagle River, AK 99577
Ph. (907)868-2360
AKrohde@RohdeArchitects.Com Corp. Auth. #AECC769

NO.	REVISION

CHUGACH TRAINING BUILDING
9312 VANGAURD DRIVE
ANCHORAGE, ALASKA 99507

JOB NO.	231079
DATE	07.10.2023
DRAWN	JJL
REVIEWED	DNB

SHEET TITLE:
FOUNDATION DETAILS

SHEET NO.
S4.0

7/19/2023 4:42:06 PM C:\Users\jlobdell\Documents\231079 Chugach School District Training Facilities v24_jlobdellHPSRR.rvt

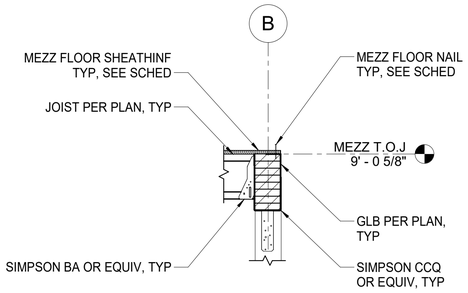

1 MEZZANINE BEAM BEARING
3/4" = 1'-0"

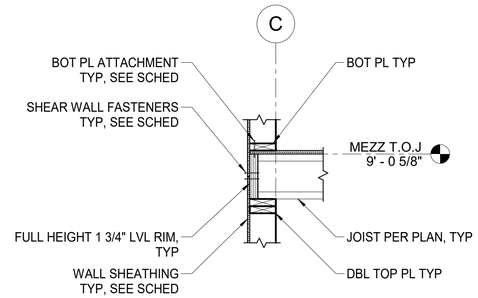

2 MEZZANNE WALL BEARING
3/4" = 1'-0"

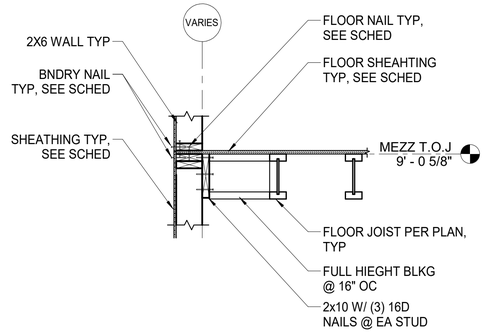

3 MEZZANINE WALL TO WALL CONN
3/4" = 1'-0"

THIS SHEET IS FULL SIZE AT 34"x22"
1" ACTUAL

7/19/2023 4:42:06 PM C:\Users\jlobdell\Documents\231079 Chugach School District Training Facilities v24_jlobdellHPSRR.rvt

STATE OF ALASKA
49TH
PRELIMINARY
NOT FOR CONSTRUCTION
07.10.2023

ROHDE ARCHITECTS
Architecture Planning Design/Build
11925 Old Glenn Hwy., Suite 201, Eagle River, AK 99577
ph. (907)696-2960
ARohde@RohdeArchitects.Com Corp. Auth. #AECC769

NO.	REVISION

CHUGACH TRAINING BUILDING
9312 VANGAURD DRIVE
ANCHORAGE, ALASKA 99507

JOB NO.	231079
DATE	07.10.2023
DRAWN	JJL
REVIEWED	DNB

SHEET TITLE:
FLOOR DETAILS

65% SUBMITTAL

IF THIS SHEET IS LESS THAN: 22"X34" IT IS A REDUCED PRINT
- DO NOT SCALE DIMENSIONS FROM BLUEPRINTS -

SHEET NO.
S5.0

THIS SHEET IS FULL SIZE AT 34"x22"

1" ACTUAL

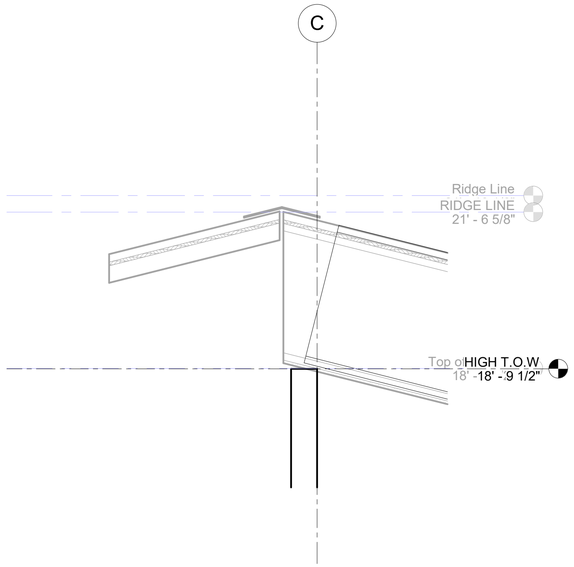

1 Section 4
3/4" = 1'-0"

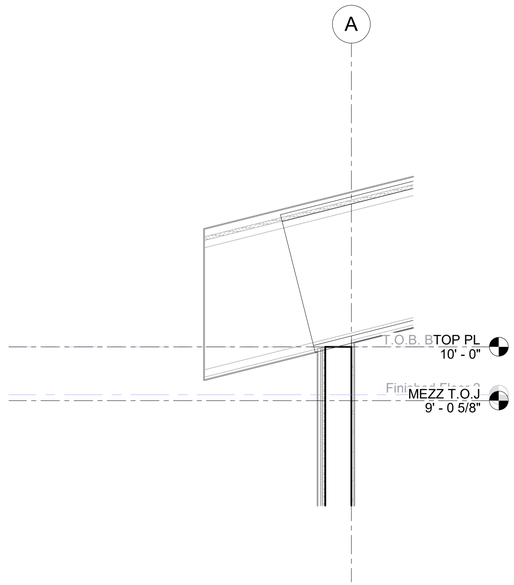

2 Section 5
3/4" = 1'-0"

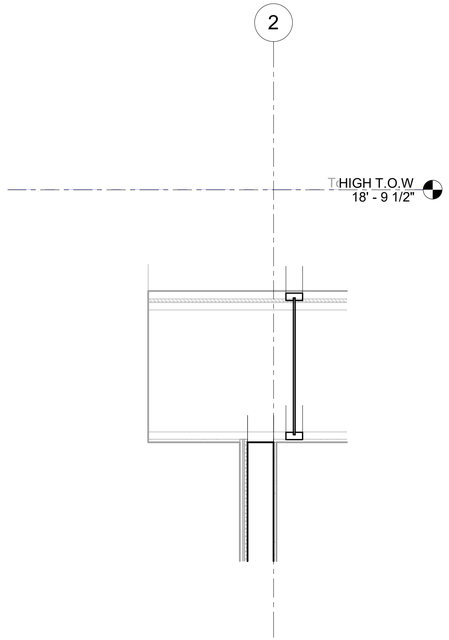

3 Section 6
3/4" = 1'-0"

STATE OF ALASKA
49TH
PRELIMINARY
NOT FOR CONSTRUCTION
07.10.2023

ROHDE ARCHITECTS
Architecture Planning Design/Build
11925 Old Glenn Hwy., Suite 201, Eagle River, AK 99577
ph. (907)696-2960
ARohde@RohdeArchitects.Com Corp. Auth. #AECC769

NO.	REVISION

CHUGACH TRAINING BUILDING
9312 VANGAURD DRIVE
ANCHORAGE, ALASKA 99507

JOB NO.	231079
DATE	07.10.2023
DRAWN	JJL
REVIEWED	DNB

SHEET TITLE:
ROOF DETAILS

SHEET NO.
S6.0

65% SUBMITTAL

IF THIS SHEET IS LESS THAN: 22"X34" IT IS A REDUCED PRINT
- DO NOT SCALE DIMENSIONS FROM BLUEPRINTS -

7/19/2023 4:42:06 PM C:\Users\jlobdell\Documents\231079 Chugach School District Training Facilities v24_jlobdellHPSRR.rvt

THIS SHEET IS FULL SIZE AT 34"x22"

1" ACTUAL

ELECTRICAL LEGEND

- PHOTOCELL CONTROL
- LUMINAIRE - TYPE AS NOTED ON PLAN - LINEWORK MAY VARY
- LUMINAIRE - WALL MOUNTED: TYPE AS NOTED ON PLAN
- SWITCH - SINGLE POLE, SINGLE THROW, UON
- SWITCH - SEE SWITCH LEGEND FOR TYPE
- METERING DEVICE
- POWER PANELBOARD
- MOTOR CONNECTION
- COMBINATION MOTOR STARTER SAFETY SWITCH / DISCONNECT
- JUNCTION BOX OR EQUIPMENT CONNECTION (CEILING; WALL; FLOOR)
- DUPLEX RECEPTACLE - GFCI PROTECTED
- DUPLEX RECEPTACLE - GFCI PROTECTED, WEATHERPROOF, +24" UON

SWITCH LEGEND

3 (THREE WAY); 4 (FOUR WAY); B (THREE WAY DIMMER); C (TIMER); D (DIMMER); K (KEYED); L (LOW VOLTAGE); P (PILOT LIGHT); S (VARIABLE SPEED CONTROL); T (INTEGRAL MOTOR OVERLOAD)

-WALL SENSOR: 2 (DUAL CIRCUIT OCCUPANCY); D (DIMMING VACANCY SENSOR); O (OCCUPANCY SENSOR); V (VACANCY SENSOR)

- XXXX — DENOTES AVAILABLE FAULT CURRENT
- LINETYPE/LINEWEIGHT DENOTING FUTURE WORK
- LINETYPE/LINEWEIGHT DENOTING EXISTING WORK TO REMAIN
- LINETYPE/LINEWEIGHT DENOTING NEW WORK
- LINETYPE/LINEWEIGHT DENOTING DEMO WORK
- LINETYPE/LINEWEIGHT DENOTING BELOW GRADE CONDUIT
- LINETYPE/LINEWEIGHT DENOTING CONTROL WIRING

EQUIPMENT TAG LEGEND

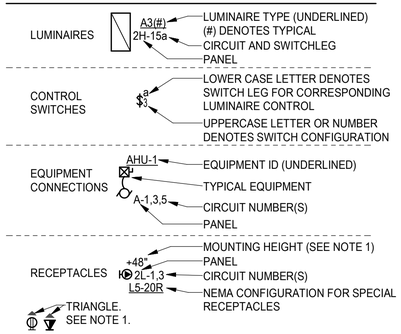

NOTE 1: DIMENSIONS (WHEN GIVEN ARE AFF). TRIANGLE DENOTES 46" AFF IN OPEN AREAS OR AT CASEWORK LOCATIONS TO BE 4" ABOVE COUNTERTOP (BACKSPLASH WHEN PRESENT). COORDINATE WITH ARCHITECTURE. THIS APPLIES TO ALL ELECTRICAL DEVICES.

AREA LEGEND

- NON-CLASSIFIED
- IMC 304 ELEVATION OF IGNITION SOURCES

IMC 304 GENERAL NOTES

1. MOA AMENDMENTS TO THE INTERNATIONAL MECHANICAL CODE (IMC) AND THE INTERNATIONAL FUEL GAS CODE (IFGC) REQUIRE THE ELEVATION OF IGNITION SOURCES IN THE INTERNATIONAL BUILDING CODE (IBC) GROUP F (FACTORY), M (MERCANTILE), AND S (STORAGE) OCCUPANCIES WITH OVERHEAD DOORS PROVIDING ACCESS TO VEHICLES AND EQUIPMENT CONTAINING COMBUSTIBLE FUEL. THESE AREAS SHALL HAVE ALL IGNITION SOURCES ELEVATED SUCH THAT THE SOURCE OF IGNITION IS NOT LESS THAN 18" ABOVE FINISHED FLOOR. IGNITION SOURCES INCLUDE ALL ELECTRICAL AND MECHANICAL EQUIPMENT THAT COULD PRODUCE ARCING, SPARKING, FLAME, OR GLOW. TYPICAL EQUIPMENT INCLUDES BUT IS NOT LIMITED TO: RECEPTACLES, LIGHTING, WATER HEATERS, BOILERS, UNIT HEATERS, COMPUTERS, DISHWASHERS, REFRIGERATORS, VENDING MACHINES, ETC.
2. SPACES ADJACENT TO THESE VEHICLE ACCESS BAYS SHALL ALSO HAVE ALL IGNITION SOURCES ELEVATED TO NOT LESS THAN 18" ABOVE FINISH FLOOR UNLESS:
   A. SPACES DO NOT COMMUNICATE AND ARE EFFECTIVELY CUT OFF BY WALLS OR PARTITIONS
   B. THERE IS A 2-DOOR SEPARATION BETWEEN SPACES.
   C. THERE IS A 1-DOOR SEPARATION BETWEEN SPACES AND THE DOOR IS GASKETED WITH SELF-CLOSURE HARDWARE.
3. THE INTENT IS TO NOT LOCATE ANY ELECTRICAL OR MECHANICAL EQUIPMENT WITHIN 18" OF THE FINISHED FLOOR LEVEL IN AREAS WHERE THIS CONDITION IS DENOTED.
4. THIS REQUIREMENT FOR ELEVATION OF IGNITION SOURCES MAY APPLY TO BOTH CLASSIFIED AND NON-CLASSIFIED AREAS.

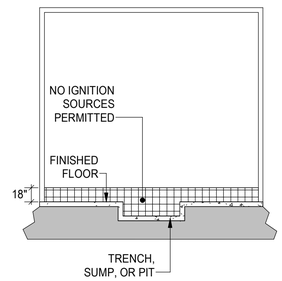

TYPICAL IMC 304 LOCATION ELEVATION

1 E0.1 IMC 304 AREA ELEVATION
SCALE: NONE

ELECTRICAL SHEET LIST	
NUM	SHEET TITLE
E0.1	LEGEND
E0.2	ELECTRICAL SPECIFICATIONS
E1.1	LIGHTING PLAN
E2.1	POWER AND SIGNAL PLAN
E3.1	ONE-LINE DIAGRAMS, DETAILS, AND SCHEDULES
TOTAL SHEETS: 5	

ABBREVIATIONS - MOA STAMP BLOCK	
INDUSTRY STANDARD ABBREVIATIONS SHALL ALSO BE APPLICABLE.	
(#)	DENOTES TYPICAL IN LIGHT FIXTURE TYPES
(D)	DEMOLISH
(E)	EXISTING
(R)	RELOCATED
AER	ARC ENERGY REDUCTION
AFCI	ARC FAULT CIRCUIT INTERRUPTER
AFF	ABOVE FINISHED FLOOR
AFG	ABOVE FINISHED GRADE
AL	ALUMINUM
BJ	BONDING JUMPER
CB	CIRCUIT BREAKER
CO, C.O.	CONDUIT ONLY
CT	CURRENT TRANSFORMER
CU	COPPER
EECP	ELEVATOR EMERGENCY COMMUNICATION PANEL
EECS	ELEVATOR EMERGENCY COMMUNICATION STATION
EGC	EQUIPMENT GROUNDING CONDUCTOR
FAA	FIRE ALARM ANNUCIATOR
FACP	FIRE ALARM CONTROL PANEL
FC	FOOTCANDLE ILLUMINATION
FHP	FRACTIONAL HORSEPOWER
FLA	FULL LOAD AMPS
FSD	FIRE SMOKE DAMPER
G, GFCI	GROUND FAULT CIRCUIT INTERRUPTER
GEC	GROUNDING ELECTRODE CONDUCTOR
GES	GROUNDING ELECTRODE SYSTEM
GFPE	GROUND FAULT PROTECTION OF EQUIPMENT
MCA	MINIMUM CIRCUIT AMPACITY
MFS	MAXIMUM FUSE SIZE
NC	NORMALLY CLOSED
NIC	NOT IN CONTRACT (NOT IN SCOPE)
NO	NORMALLY OPEN
P	POLES
PC	PHOTO CELL
PH, Ø	PHASE
PNL	PANEL
RIB	RELAY IN A BOX (MOTOR RATED)
SCA	SHORT CIRCUIT AMPS
SCCR	SHORT CIRCUIT CURRENT RATING
SE	SERVICE ENTRANCE RATED
SSBJ	SUPPLY SIDE BONDING JUMPER
SSEBJ	SUPPLY SIDE EQUIPMENT BONDING JUMPER
TGB	TELECOMMUNICATION GROUNDING BUSBAR
TMGB	TELECOMMUNICATION MAIN GROUNDING BUSBAR
TYP	TYPICAL
UON	UNLESS OTHERWISE NOTED
VFD	VARIABLE FREQUENCY DRIVE
W	WATTS OR WIRE
WG	WIRE GUARD
WP	WEATHERPROOF
XFMR	TRANSFORMER

MOUNTING HEIGHT SCHEDULE	
EQUIPMENT (TO CENTER UON)	HEIGHT (UON)
CONTACTORS, MOTOR STARTERS, DISCONNECT (TOP)	66"
ELECTRIC RANGE RECEPTACLES (TOP)	7" MAX
INDICATING DEVICES (BOTTOM)	80"
PANELBOARDS - POWER; SPECIAL SYSTEMS (TOP)	72"
POWER METER BASE (CENTER LINE OF SOCKET)	PER UTILITY
PULL STATIONS, PUSH BUTTONS	46"
REC FULL HEIGHT REFRIGERATOR OR REACH-IN UNITS	46"
REC IN FINISHED AREAS	18"
REC IN NON-FINISHED, WAREHOUSE, MECH AND SHOPS	46"
REC LOCATED IN HAZARDOUS OR S-2 OCCUPANCIES	24" MINIMUM
TELECOMMUNICATION OUTLETS	18"
WALL MOUNTED SWITCHES	46"
WASHING MACHINES AND DRYER RECEPTACLE	43"

MOA PLAN REVIEW PROJECT SUMMARY
NEW BUILDING WITH NEW ELECTRICAL SYSTEM.

STATE OF ALASKA
49TH
PRELIMINARY NOT FOR CONSTRUCTION
BOWLING - 9773
PROFESSIONAL ENGINEER

ROHDE ARCHITECTS
Architecture Planning Design/Build
11525 Old Glenn Hwy., Suite 201, Eagle River, AK 99577
ph 907.696.2840
ARohde@RohdeArchitects.Com Corp. Auth. #AECC769

NO.	REVISION	DATE

CHUGACH TRAINING BUILDING
9312 VANGUARD DR, ANCHORAGE, AK, 99507

EIC ENGINEERS, INC
ELECTRICAL ENGINEERS
EIC JOB NO: E23-4211
CORP. #AECC1105
6927 OLD SEWARD HWY
SUITE 200
ANCHORAGE, AK 99518
T 907.349.9712
F 907.349.9713
www.eiceng.com

Project Status

IF THIS SHEET IS LESS THAN: 22"X34" IT IS A REDUCED PRINT - DO NOT SCALE DIMENSIONS FROM BLUEPRINTS -

JOB NO.	E23-4211
DATE	08/03/2023
DRAWN	JRW
REVIEWED	EDC

SHEET TITLE: LEGEND

SHEET NO. E0.1

8/3/2023 12:06:07 PM C:\Users\JoshWarta\EIC Engineers\Design - Files\Projects\E23\E23-4211 Chugach School District Training Office\DES\E23-4211_ESht24_ChugachSchoolDistrictTrainingOffice.rvt
qc:08/03/2023 12:06:04 : lc-2 : \ws0nSht : abuDbl : 0.4;2.4:2.8/2753

1" ACTUAL
THIS SHEET IS FULL SIZE AT 34"x22"

ELECTRICAL SPECIFICATIONS

"X" = PROVIDE SUBMITTAL

26 00 00 - GENERAL REQUIREMENTS: ALL ELECTRICAL WORK SHALL BE INSTALLED IN ACCORDANCE WITH THE REQUIREMENTS OF THE LATEST EDITION OF THE NATIONAL ELECTRIC CODE (NEC), STATE, MUNICIPAL, FEDERAL LAWS, AND AMENDMENTS GOVERNING THE PROJECT. ALL WORK SHALL BE PERFORMED UNDER THE SUPERVISION OF A CERTIFIED ADMINISTRATOR JOURNEYMAN ELECTRICIAN.

ALL ELECTRICAL EQUIPMENT SHALL BE NEW COMMERCIAL GRADE AND INCLUDE THE SEAL OF A NATIONALLY RECOGNIZED TESTING LABORATORY FOR THE PURPOSE IT IS INSTALLED AS A COMPLETE ASSEMBLY. THE CONTRACTOR SHALL SUBMIT A REQUEST FOR ANY SUBSTITUTION OR DEVIATION FROM THE DESIGN IN WRITING TO THE ENGINEER. THE CONTRACTOR SHALL OBTAIN ALL REQUIRED CONSTRUCTION PERMITS, SCHEDULE INSPECTIONS, AND PAY ALL ASSOCIATED FEES UNLESS DIRECTED OTHERWISE.

WORKING CLEARANCES: THE CONTRACTOR IS REQUIRED TO COORDINATE THE MINIMUM WORKING CLEARANCES AND DEDICATED EQUIPMENT REQUIRED BY THE NEC. THE CONTRACTOR IS REQUIRED TO COORDINATE WITH ALL SUBCONTRACTORS SO THAT ENCROACHMENTS INTO THE RESTRICTED SPACE ARE PREVENTED.

PROVIDE ALL CUTTING, CORING, AND PATCHING REQUIRED FOR ELECTRICAL INSTALLATION. REGISTERED STRUCTURAL ENGINEER APPROVAL IS REQUIRED WHEN CORING OR CUTTING OF STRUCTURAL MEMBERS IS REQUIRED.

PLENUM RATING: ALL CABLING, RACEWAYS, CABLE TIES AND COMPONENTS LOCATED IN CEILING SPACES THAT ARE PLENUMS SHALL BE PLENUM RATED.

COORDINATE WITH ARCHITECTURAL PLANS, SHOP DRAWINGS, AND OTHER TRADES PRIOR ROUGH-IN FOR FOR DEVICE AND EQUIPMENT LOCATIONS AND REQUIREMENTS.

BARRIER RATINGS: ALL ELECTRICAL PENETRATIONS THROUGH FIRE RATED BARRIERS SHALL BE SEALED IN ACCORDANCE WITH NEC ARTICLE 300.21. PROVIDE FIRE PUTTY OR SHEET ROCK CONFIGURED FOR UL FIRE RATING WRAPPING ALL BOXES AND PANELS MATCHING WALL AND CEILING FIRE RATING. CONTRACTOR TO PROVIDE SUBMITTAL OF ALL FIRE RATING SYSTEMS TO BE USED. VAPOR BARRIERS: SEAL ALL VAPOR BARRIER PENETRATIONS TO MAINTAIN SYSTEM INTEGRITY. RACEWAYS EXPOSED TO DIFFERENT TEMPERATURES SHALL BE FILLED WITH AN APPROVED MATERIAL IN ACCORDANCE WITH NEC TO STOP AIR FLOW..

ACCESS PANELS: PROVIDE ACCESS PANELS FOR ALL LOCATIONS NECESSARY TO ACCESS ELECTRICAL EQUIPMENT AND JUNCTION BOXES. ACCESS PANELS SHALL BE FIRE RATED EQUAL TO OR EXCEEDING THE ADJACENT WALL OR CEILING CONSTRUCTION AND PAINTED TO MATCH.

26 01 10 - SUBMITTALS: PROVIDE MATERIAL AND EQUIPMENT SUBMITTAL FOR EACH SPECIFICATION SECTION DENOTED AS REQUIRED AT MINIMUM. SUBMITTALS SHALL BE SUBMITTED ELECTRONICALLY IN PDF FORMAT (UNLESS HARD COPY IS REQUIRED BY OTHER CONTRACT APPLYING TO THE ENTIRE PROJECT). SUBMIT ALL REQUIRED SECTIONS IN A SINGLE SUBMITTAL OR BROKEN INTO NO MORE THAN THE FOLLOWING SEPARATE SECTIONS: "LIGHTING", "EQUIPMENT", "WIRING/DEVICES", AND "SPECIAL SYSTEMS". ORGANIZE SUBMITTAL AND/OR EACH SECTION BY SPECIFICATION NUMBER FOLLOWED BY ANY MAJOR EQUIPMENT REFERENCE ON THE DRAWINGS WITH ALL OPTIONS AND SELECTIONS HIGHLIGHTED TO DENOTE THE SPECIFIC EQUIPMENT PROPOSED. SUBMITTAL REVIEW IS FOR GENERAL DESIGN AND CONFIGURATION AND DOES NOT RELIEVE THE CONTRACTOR FROM PROVIDING A COMPLETE OPERATIONAL SYSTEM COMPLIANT WITH THE REQUIREMENTS OF THE CONTRACT DOCUMENTS.

26 01 21 - RECORD DRAWINGS: MARK UP A SET OF DRAWINGS (REDLINES) SHOWING ALL ELECTRICAL WORK. SHOW DIAGRAMMATIC ROUTING MODIFICATIONS, SIZING, AND CIRCUIT REVISIONS TO THE CONTRACT PLANS. RECORD DRAWINGS SHALL BE KEPT ON SITE AVAILABLE FOR REVIEW DURING THE ENTIRE CONSTRUCTION PERIOD. SUBMIT FINAL REDLINE SET FOR APPROVAL PRIOR TO FINAL INSPECTION.

26 01 22 - WARRANTY: THE CONTRACTOR SHALL GUARANTEE ALL WORK EXECUTED UNDER THIS CONTRACT TO BE FREE FROM DEFECTS IN MATERIALS AND WORKMANSHIP FOR A PERIOD OF ONE YEAR FROM SUBSTANTIAL COMPLETION. ANY FAULTY MATERIALS OR WORKMANSHIP SHALL BE REPAIRED DURING THE GUARANTEE PERIOD AT NO ADDITIONAL COST TO THE OWNER.

26 05 15 - POWER AND LIGHTING CONDUCTORS: STRANDED COPPER ROUTED IN CONDUIT UNLESS NOTED OTHERWISE. INSULATION TO BE THHN-2 90 DEGREE C FOR INDOOR APPLICATIONS AND XHHW-2 90 DEGREE C FOR OUTDOOR LOCATIONS, IN UNHEATED SPACES, OR INSTALLED WHILE THE AMBIENT TEMPERATURE IS LESS THAN -7C (20F). ALL CONDUCTORS SHALL BE INSTALLED IN ACCORDANCE WITH NEC REQUIREMENTS FOR AMBIENT TEMPERATURE DERATING, CONDUIT FILL DERATING, AND BOX FILL. PROVIDE UNSHARED DEDICATED NEUTRAL FOR EACH CIRCUIT. BRANCH CIRCUIT WIRING MAY BE INSTALLED IN CABLES WHERE ROUTED CONCEALED AND SUPPORTED BY NEC REQUIREMENTS AND TYPE TYPE W OR EQUAL CORDS WHERE INSTALLED IN ACCORDANCE WITH THE NEC REQUIREMENTS SIZED AS DENOTED IN THE NEC TABLES 400.5(A)(2) AND 400.5(A)(3).

240V/120V CONDUCTORS: COLOR CODE CONDUCTORS BLACK, RED, WHITE, AND GREEN. MINIMUM SIZE CONDUCTORS FOR 15 AND 20 AMP BRANCH CIRCUITS MEASURED FROM THE PANELBOARD TO THE FURTHEST DEVICE ON THE CIRCUIT UNLESS OTHERWISE NOTED ON THE DRAWINGS: 12 AWG UP TO 75 FT, 10 AWG 75 FT TO 140 FT, GREATER THAN 140 FT SIZE CONDUCTORS TO LIMIT VOLTAGE DROP TO 5% OR LESS.

26 05 19 - MC CABLES: METALCLAD (MC) CABLE WITH STEEL OUTER SHEATH. ALLOWED USES DRY WHERE ROUTED CONCEALED AND PROTECTED.

26 05 26 - GROUNDING AND BONDING FOR ELECTRICAL SYSTEMS: PROVIDE EQUI-POTENTIAL GROUNDING SYSTEM, IN ACCORDANCE WITH NEC ARTICLE 250. PROVIDE GROUNDING CONDUCTOR IN ALL RACEWAYS BONDED TO EQUIPMENT AND TO RACEWAY SYSTEM.

26 05 29 - HANGARS AND SUPPORTS FOR ELECTRICAL SYSTEMS: SUPPORT ALL ELECTRICAL EQUIPMENT INCLUDING, BUT NOT LIMITED TO, LIGHT FIXTURES, PANELBOARDS, BOXES, CONDUIT, ETC. PER NEC AND IBC SEISMIC REQUIREMENTS. PROVIDE SEISMIC SUPPORT AND DESIGN SEALED BY A LICENSED STRUCTURAL ENGINEER AS A DEFERRED SUBMITTAL TO THE AHJ FOR ALL EQUIPMENT OVER 400 LBS AND, EQUIPMENT OVER 20 LBS MOUNTED GREATER THAN 4FT AFF, CONDUIT 2.5"C OR GREATER AND ALL TRAPEZE OR WALL SUPPORTED RACEWAY 10 LBS/LF OR GREATER. SUPPORT STRUT AND MOUNTING HARDWARE TO BE GALVANIZED

26 05 30 - RACEWAY: ALL POWER, LIGHTING, CLASS 1, CLASS 2/3 CIRCUITS INSTALLED IN CONDUIT SHALL BE CONCEALED RACEWAY EXCEPT WHERE SPECIFICALLY INDICATED ELSEWHERE IN THE SPECIFICATIONS OR SHOWN ON THE DRAWINGS. ELECTRICAL EQUIPMENT AND WIRING CAN BE EXPOSED IN MECHANICAL/ELECTRICAL ROOMS, COOLER/FREEZERS, TELECOMMUNICATION ROOMS, OPEN CEILING SPACES, OR WHERE SPECIFICALLY NOTED. DO NOT ROUTE RACEWAYS ON THE EXTERIOR SURFACE OF THE BUILDING OR THE ROOF UNLESS SPECIFICALLY NOTED OTHERWISE. RACEWAYS CROSSING BUILDING SEISMIC JOINTS OR CONNECTING TO EQUIPMENT WHICH MOVES OR VIBRATES REQUIRE TRANSITION TO FLEXIBLE RACEWAY ACROSS JOINT WITH ENOUGH SLACK TO ALLOW BUILDING MOVEMENT IN ALL DIRECTIONS WITHOUT DAMAGE.

ELECTRICAL SPECIFICATIONS

"X" = PROVIDE SUBMITTAL

26 05 33 – RIGID METAL CONDUIT (RMC): ANSI C80.1, UL 6. WITH BUSHINGS AT ALL TERMINATIONS. FITTINGS: GALVANIZED MALLEABLE IRON WITH THREADED HUBS FOR ALL CONDUIT ENTRIES AND COUPLINGS. SET SCREW OR RUNNING THREAD FITTINGS ARE NOT PERMITTED. USES: WET OR DRY WHERE INSTALLED BELOW GRADE, IN CONCRETE, STUB UPS, CONCEALED, WHERE EXPOSED TO PHYSICAL DAMAGE, ROUTED ON BUILDING ROOF, SERVICE RISERS, OR WITHIN 10FT OF RACEWAY ROUTED INTO FIXED FOUNDATIONS SUCH AS LIGHT POLE BASE OR STRUCTURE. MUST USE THREADED FITTINGS. MYERS HUBS WITH GROUNDING LOCKNUTS ARE REQUIRED FOR SERVICE RACEWAYS TO CT'S, METERS AND MAIN DISCONNECTS.

26 05 34 - ELECTRICAL METALLIC TUBING (EMT): ANSI C80.3, UL 797; GALVANIZED STEEL TUBING. FITTINGS: NEMA FB 1; GALVANIZED STEEL OR MALLEABLE IRON SET SCREW OR COMPRESSION. DIE CAST OR PRESSURE CAST FITTINGS OR LOCKNUTS ARE NOT PERMITTED. USES: WET OR DRY CONCEALED OR EXPOSED WHERE NOT SUBJECT TO PHYSICAL DAMAGE. WET OR DAMP LOCATIONS REQUIRE WET RATED GLAND COMPRESSION COUPLINGS AND CONNECTORS.

26 05 35 - FLEXIBLE METAL CONDUIT (FMC): GALVANIZED OR ZINC COATED FLEXIBLE STEEL CONSTRUCTION. FMC FITTINGS: GALVANIZED MALLEABLE IRON OR STEEL WITH INSULATED THROATS. USES: DRY SPACES LENGTHS LESS THAN 6FT FOR CONNECTIONS TO MOTORS, TRANSFORMERS, AND OTHER MOVABLE OR VIBRATING EQUIPMENT.

LIQUIDTIGHT FLEXIBLE CONDUIT (LTMC): GALVANIZED OR ZINC COATED FLEXIBLE STEEL CONSTRUCTION WITH PVC OUTER JACKET. USES: DRY, DAMP, OR WET LOCATIONS LENGTHS LESS THAN 6FT FOR CONNECTIONS TO MOTORS, TRANSFORMERS, AND OTHER MOVABLE OR VIBRATING EQUIPMENT.

26 05 36 - WET OR DAMP LOCATIONS: USE DEVICES, FIXTURES, RACEWAYS, CONNECTORS, COUPLINGS, CABLES, ENCLOSURES, SUPPORTS, DEVICES, COVER PLATES, AND CONDUCTORS RATED FOR LOCATION INSTALLED.

26 05 40 - BOXES: PROVIDE PULL AND JUNCTION BOXES AS REQUIRED SIZED PER NEC REQUIREMENTS. BOX TO BE NEMA RATED FOR THE THE ENVIRONMENT INSTALLED. BRANCH CIRCUIT JUNCTION BOXES TO BE ELECTRO-GALVANIZED, 4" SQUARE BY 1 1/2" DEEP MINIMUM FOR USE IN DRY INTERIOR AREAS. PROVIDE 4 11/16" SQUARE BY 2 1/8" DEEP OUTLET BOXES FOR ALL VOICE AND DATA OUTLETS. DO NOT INSTALL BOXES BACK-TO-BACK IN WALLS. PROVIDE SEPARATION TO MINIMIZE SOUND TRANSFER. PROVIDE FIRE RATED PADS TO COVER EACH BOX IN FIRE RATED WALLS WHERE NECESSARY TO MAINTAIN FIRE WALL RATING.

26 05 40.1 - WET OR DAMP LOCATION BOXES AND FITTINGS: FITTINGS/BOXES: THREADED HUBS, GASKETED AND WET RATED. BOXES SHALL BE CAST FERROUS WITH THREADED HUBS, NEMA 3R FOR EXTERIOR LOCATIONS, NEMA 4 FOR INTERIOR WET LOCATIONS. NEMA 4X FOR OUTDOOR CONTROL EQUIPMENT AND INTERIOR/EXTERIOR WET LOCATIONS EXPOSED TO CORROSIVE ENVIRONMENT.

26 05 53 - IDENTIFICATION FOR ELECTRICAL EQUIPMENT: PROVIDE PLACARDS FOR ALL NEW AND EXISTING AFFECTED ELECTRICAL SWITCHBOARDS, PANELBOARDS, TRANSFER SWITCHES, CONTACTORS, EQUIPMENT AND DISCONNECTS PER NEC REQUIREMENTS.

X 26 09 24 - PHOTOCELL: ENCLOSED IN A WEATHER TIGHT ENCLOSURE WITH THREADED NIPPLE. THE ENCLOSURE SHALL BE SUITABLE FOR MOUNTING IN ANY POSITION WITH AN ADJUSTMENT SHIELD TO PERMIT ADJUSTMENT TO TURN-ON LIGHT LEVEL REQUIREMENTS.

X 26 24 13 - DISTRIBUTION: PROVIDE AND INSTALL CIRCUIT BREAKER TYPE, CLASS 1 SWITCHBOARD STYLE FOR EQUIPMENT RATED GREATER THAN 225 AMPS (WALL MOUNTED PANELBOARD STYLE CAN BE USED WHEN ADEQUATE RACEWAY AND CONDUCTOR SPACE IS AVAILABLE AND RATED 1200 AMPS OR LESS). THE RATING AND CONFIGURATION TO BE AS SHOWN ON THE SINGLE LINE DIAGRAM, SCHEDULES, AND FULLY RATED FOR THE MAXIMUM AVAILABLE FAULT CURRENT PER THE SCCR SCHEDULE.

X 26 24 16 - PANELBOARDS: PROVIDE AND INSTALL NEMA PB1; BOLT-ON CIRCUIT BREAKER TYPE. FS W-P-115; TYPE I, CLASS 1 PANELBOARD OF THE RATING AND CONFIGURATION AS SHOWN ON THE SINGLE LINE DIAGRAM, PANEL SCHEDULES, AND SCCR TABLE. PROVIDE TYPED CIRCUIT DIRECTORY SHOWING CIRCUITING ARRANGEMENT. PROVIDE BREAKER HANDLE TIES ON ALL EXISTING AND NEW MULTIWIRE BRANCH CIRCUITS SHOWN ON DRAWINGS. PROVIDE BREAKER LOCK-ON HANDLES FOR ALL FIRE ALARM AND EMERGENCY LIGHTING CIRCUITS AND PROVIDE LOCK-OFF DEVICES ON ALL BREAKERS USED FOR DISCONNECTS.

X 26 27 13 - ELECTRICAL SERVICES: THE ELECTRICAL CONTRACTOR SHALL CONTACT EACH SERVING UTILITY CO. AND VERIFY EXACT SERVICE REQUIREMENTS/LOCATION FOR POWER, TELEPHONE AND CABLE TV. SUBMIT EQUIPMENT SUBMITTALS/SHOP DRAWINGS TO SERVING POWER UTILITY FOR COORDINATION OF FAULT CURRENT RATINGS AND CONFIGURATION APPROVAL PRIOR TO EQUIPMENT PROCUREMENT. THE CONTRACTOR SHALL COORDINATE AND PROVIDE ALL REQUIREMENTS OF EACH SERVING UTILITY AND ALL EQUIPMENT SHALL CONFORM TO THE SERVING UTILITY STANDARDS AND REQUIREMENTS.

26 27 26 - WIRING DEVICE PLATES: COORDINATE COLOR WITH OWNER. FINISHED AREAS - FLUSH SMOOTH PLASTIC WITH MATCHING SCREWS. UNFINISHED AREAS - RAISED GALVANIZED STEEL. WET OR DAMP LOCATIONS PROVIDE WET RATED GASKETED PLATES. EXTERIOR AREAS - WEATHERPROOF WHILE-IN-USE, DIE CAST METAL, POWDER COAT FINISH, GASKETED, EXTRA DUTY RATED.

26 27 27 - RECEPTACLES: DUPLEX (AS DENOTED ON THE PLANS) COMMERCIAL GRADE, 2 POLE, 3 WIRE, 120V, 20 AMP STRAIGHT BLADE, UON, UL LISTED, SMOOTH NYLON FACE, BACK AND SIDE WIRED. INSTALL RECEPTACLES VERTICALLY WITH GROUNDING POLE ON BOTTOM UNLESS NOTED OTHERWISE.

TAMPER-RESISTANT: ALL 15 AND 20 AMP, 125- AND 250-VOLT NONLOCKING-TYPE RECEPTACLES SHALL BE LISTED TAMPER-RESISTANT FOR ALL RECEPTACLES LESS THAN 5-1/2 FT AFF IN THE FOLLOWING LOCATIONS: PRESCHOOLS AND EDUCATION FACILITIES; ASSEMBLY OCCUPANCIES TO INCLUDE PLACES OF AWAITING TRANSPORTATION, GYMNASIUMS, SKATING RINKS, AND AUDITORIUMS;

26 27 28 - GFCI RECEPTACLES: DUPLEX WITH CLASS 3 INTEGRAL GROUND FAULT CURRENT INTERRUPTER (GFCI). THE GFCI SHALL BE INSTALLED IN A READILY ACCESSIBLE LOCATION OR PROVIDE GFCI BREAKER IN PANEL. EXTERIOR, WET, OR DAMP LOCATIONS SHALL BE WEATHER RESISTANT MARKED "WR" ON THE FACE.

26 27 35 - SWITCHES: 20 AMP, 120/277V AC, BACK AND SIDE WIRED CONFIGURED AS INDICATED ON THE DRAWINGS. PROVIDE NEUTRAL (GROUNDED CONDUCTOR) IN ALL SWITCH BOXES FOR EACH SWITCHED CIRCUIT TO ALLOW FUTURE TECHNOLOGIES TO BE INSTALLED WHICH REQUIRE NEUTRAL CONDUCTOR.

X 26 28 03 - FUSES: PROVIDE CLASS RK5 DUAL-ELEMENT TIME-DELAY FOR ALL NON-CURRENT LIMITING APPLICATIONS. PROVIDE RK1, J, OR T FAST ACTING CURRENT LIMITING FUSES FOR EACH FUSED DISCONNECT PER THE "EQUIPMENT SCCR SCHEDULE" NOTES AND RATING REQUIREMENTS.

X 26 28 16 - DISCONNECT SWITCHES: PROVIDE DISCONNECTS FOR EQUIPMENT AS REQUIRED BY NEC. HORSEPOWER RATED FOR MOTORS, DEFEATABLE DOOR INTERLOCK TO PREVENT DOOR OPENING WHEN IN THE ON POSITION, GROUND BUS, AND PAD LOCKABLE IN THE OFF POSITION. PROVIDE SOLID NEUTRAL KIT WHERE NEUTRAL IS REQUIRED. FRACTIONAL HORSEPOWER MOTORS CAN USE MOTOR RATED SNAP SWITCHES.

ELECTRICAL SPECIFICATIONS

"X" = PROVIDE SUBMITTAL

X 26 29 13 - ENCLOSED CONTROLLERS: MAGNETIC MOTOR STARTERS: NEMA ICS 2; FULL VOLTAGE CONTROLLER RATED IN HORSEPOWER ELECTRICALLY HELD WITH "HAND-OFF-AUTO" SWITCH IN THE OUTER DOOR TO PROVIDE AUTOMATIC CONTROL, MANUAL OVERRIDE ON OR OFF CONTROL. PROVIDE RED LED PILOT LIGHT ON FRONT COVER TO ILLUMINATE WHEN CONTACTOR IS IN THE CLOSED POSITION. CONTROL POWER SHALL BE PROVIDED BY 120 VAC OR LOW VOLTAGE CONTROL TRANSFORMER LOCATED WITHIN THE ENCLOSURE. COORDINATE DESIRED CONTROL VOLTAGE WITH CONTROL CONTRACTOR. UNIT SHALL BE EQUIPPED WITH OVERLOAD RELAY AND A MINIMUM OF ONE NORMALLY OPEN AND ONE NORMALLY CLOSED AUXILIARY CONTACTS. COMBINATION DISCONNECT/MOTOR STARTER: COMBINE MAGNETIC MOTOR STARTERS WITH A MOTOR CIRCUIT PROTECTOR AND WITH EXTERNALLY OPERABLE DISCONNECT SWITCH HANDLE IN A COMMON ENCLOSURE.

X 26 51 00 - LUMINAIRES: PROVIDE AND INSTALL ALL LIGHTING EQUIPMENT AS SHOWN ON THE DRAWINGS AND DESCRIBED IN THE LUMINAIRE SCHEDULE CONFIGURED WITH OPTIONS AND MOUNTING HARDWARE FOR CEILING TYPE DENOTED ON THE ARCHITECTURAL PLANS. PROVIDE SUBMITTAL WITH FINISH COLOR AND MATERIAL OPTIONS FOR FINAL SELECTION BY THE ARCHITECT WHERE APPLICABLE. LED'S TO BE LONG-LIFE COUPLED WITH HIGH-EFFICIENCY DRIVERS RATED GREATER THAN 100 LPW WITH AN 80% LED LUMEN MAINTENANCE AT 60,000 HOURS MINIMUM. DIMMING TO BE FLICKER-FREE (0-10V) DOWN TO 1% UNLESS OTHERWISE NOTED. DRIVERS TO BE 120-277 MULTI-VOLT INPUT UNLESS OTHERWISE NOTED. EXTERIOR FIXTURES AND DRIVERS TO BE COLD AND WET RATED FOR THE LOCAL ENVIRONMENT.

X 28 31 11 - FIRE ALARM SYSTEM EQUIPMENT: SYSTEM DESCRIPTION - PROVIDE AN INTELLIGENT ADDRESSABLE, ELECTRICALLY OPERATED, MICROPROCESSOR BASED, ELECTRICALLY SUPERVISED, MANUAL AND AUTOMATIC DETECTION, BATTERY BACKED UP FIRE ALARM SYSTEM. SYSTEM SHALL CONFORM TO FACTORY MUTUAL REQUIREMENTS, AMERICAN WITH DISABILITIES ACT, NEC ARTICLE 760, AND NFPA 72. WIRING SHALL BE CLASS B. EDWARDS OR EQUAL. THE FIRE ALARM SYSTEM SHALL BE A DESIGN BUILD COMPONENT OF THE PROJECT TO BE PROVIDED BY THE CONTRACTOR. SYSTEM SHALL PROVIDE ALL CODE REQUIREMENTS AT MINIMUM AND INDICATION THROUGHOUT FOR THE ENTIRE BUILDING. FIRE ALARM SYSTEM DESIGN TO BE PERFORMED AND APPROVED BY A NICET LEVEL 3 D.O. OR HIGHER DESIGNER. SHOP DRAWINGS DENOTING ALL REQUIREMENTS OF NFPA 72 AND AUTHORITY HAVING JURISDICTION OF THE SYSTEM INSTALLATION ARE TO BE SUBMITTED TO THE FIRE MARSHAL. THE CONTRACTOR IS RESPONSIBLE FOR ALL SYSTEM REQUIREMENTS, MATERIALS, EQUIPMENT, TESTING, AND RESUBMITTALS FOR THE NECESSARY FOR AN APPROVED SYSTEM. PROVIDE 4 HOURS OF TRAINING FOR 2 OWNER PERSONNEL.

- MOA STAMP BLOCK -

STATE OF ALASKA
49TH
PRELIMINARY NOT FOR CONSTRUCTION
JOSEPH W. BOWLING - 9773
PROFESSIONAL ENGINEER

ROHDE ARCHITECTS
Architecture Planning Design/Build
11525 Old Glenn Hwy., Suite 201, Eagle River, AK 99577
PH: (907) 696-2800
ARohde@RohdeArchitects.Com Corp. Auth. #AECC769

NO.	REVISION	DATE

CHUGACH TRAINING BUILDING
9312 VANGUARD DR, ANCHORAGE, AK, 99507

EIC ENGINEERS, INC
ELECTRICAL ENGINEERS
EIC JOB NO: E23-4211
CORP. #AECC1105
6927 OLD SEWARD HWY
SUITE 200
ANCHORAGE, AK 99518
T 907.349.9712
F 907.349.9713
www.eiceng.com

JOB NO.	E23-4211
DATE	08/03/2023
DRAWN	JRW
REVIEWED	EDC

SHEET TITLE:
ELECTRICAL SPECIFICATIONS

SHEET NO.
E0.2

Project Status

IF THIS SHEET IS LESS THAN: 22"X34" IT IS A REDUCED PRINT
- DO NOT SCALE DIMENSIONS FROM BLUEPRINTS -

8/3/2023 12:06:07 PM C:\Users\JosiahWarta\EIC Engineers\Design - Files\Projects\E23\E23-4211 Chugach School District Training Office\DES\E23-4211_ESht24_ChugachSchoolDistrictTrainingOffice.rvt
qc:08/03/2023 12:06:04 - fc:2 - !visOnSht : abubbi : 0,4.2,4.2,8/2753

1" ACTUAL

THIS SHEET IS FULL SIZE AT 34"x22"

LUMINAIRE SCHEDULE	
NOTES	
(KEY)	'(x)' DENOTES A GENERAL, NON-REFERENCED, NOTE. NUMBERED NOTES ARE REFERENCED IN THE SCHEDULE.
(A)	CATALOG NUMBERS ARE FOR GENERAL REFERENCE AND ARE NOT INCLUSIVE OF ALL OPTIONS/REQUIREMENTS DENOTED ON PLANS AND SPECIFICATIONS. ASTERISK (*) DENOTES COORDINATION ITEMS.
(B)	REFER TO ARCHITECTURAL DRAWINGS FOR EXACT LOCATION AND PROVIDE MOUNTING HARDWARE/FLANGES ETC FOR ALL LUMINAIRES FOR CEILING TYPES SHOWN.
(C)	PROVIDE UNIVERSAL OR MULTI-VOLTAGE VOLTAGE DRIVERS WHEN AVAILABLE. COORDINATE EXACT VOLTAGE/PHASE WITH CONNECTED CIRCUITS IN ALL OTHER SITUATIONS.
(D)	LIGHT SOURCE COLOR TEMPERATURE, UNLESS OTHERWISE NOTED: 3500K (SELECT NEAREST AVAILABLE COLOR TEMP FOR EACH LUMINAIRE TYPE). LIGHT SOURCE CRI TO BE 80 MIN, UON.
(E)	COLOR FINISH FOR ALL EXTERIOR LUMINAIRES TO BE DARK BRONZE UON.
1	NOT USED.

SCHEDULE

TYPE	DESCRIPTION	WATTS	LUMENS	MOUNTING	MANUFACTURER	MODEL	NOTES
LC4	4FT LED STRIP WITH DROPPED LENS WHITE FINISH	28 W	3693 LM LED	SURFACE	LITHONIA	CLX L48 4000LM SEF RDL * GZ10 *K *CRI WH	
ZW6	OUTDOOR LED WALL LUMINAIRE, DIE-CAST ALUMINUM	46 W	5554 LM LED	WALL + 14'	LITHONIA	DSXW1 LED 20C 700 *K x x *	

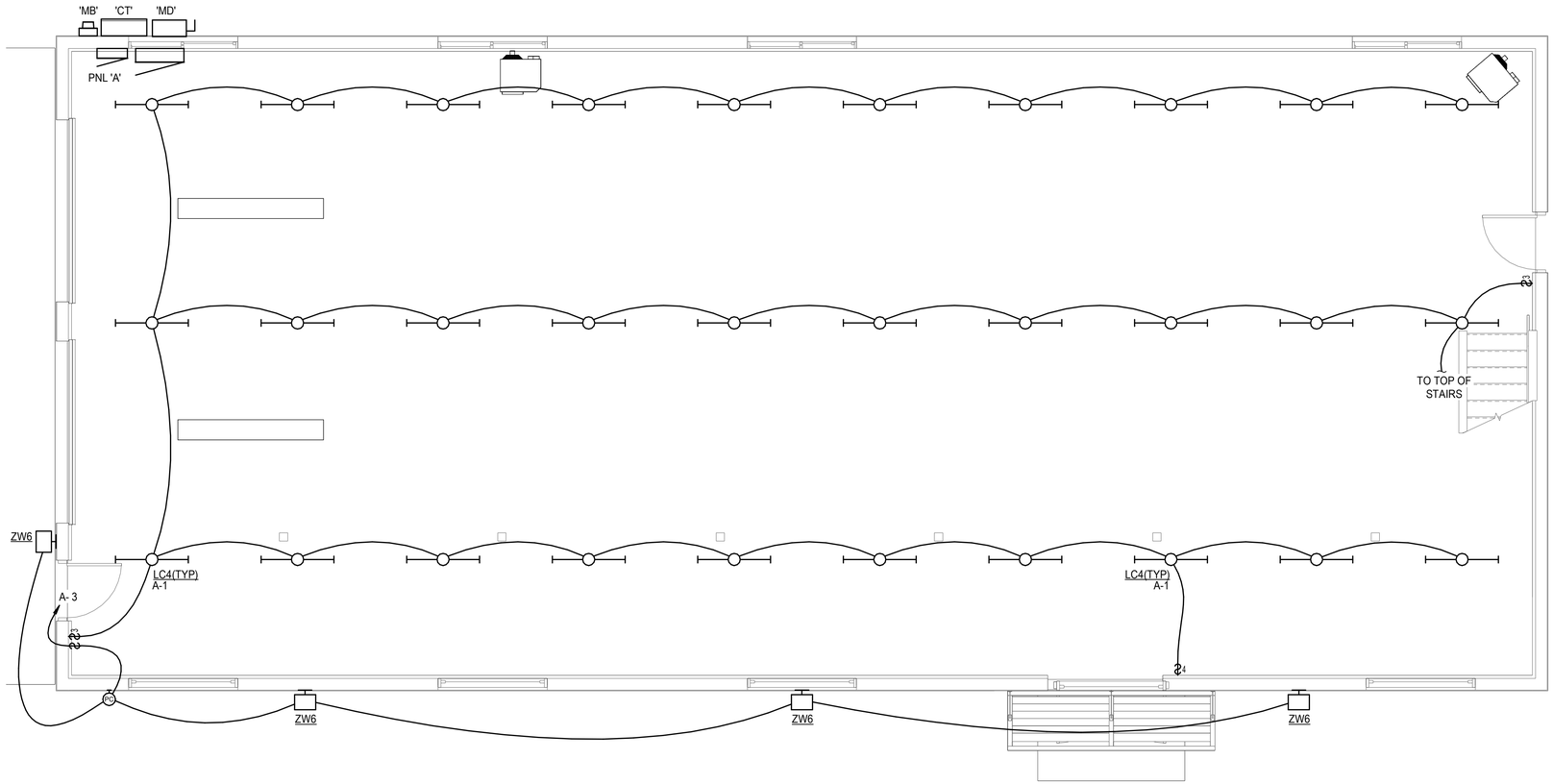

1 E1.1 LIGHTING PLAN - LEVEL 1
SCALE: 1/4" = 1'-0"

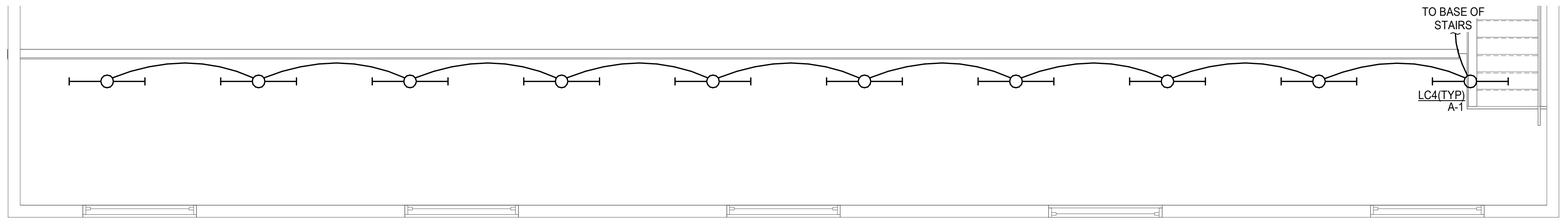

2 E1.1 LIGHTING PLAN - MEZZANINE
SCALE: 1/4" = 1'-0"

- MOA STAMP BLOCK -

REFERENCED SHEET NOTES

REF	NOTE

STATE OF ALASKA
49TH
PRELIMINARY NOT FOR CONSTRUCTION
JOSHUA J. BOWLING - 9773
PROFESSIONAL ENGINEER

ROHDE ARCHITECTS
Architecture Planning Design/Build
11925 Old Glenn Hwy., Suite 201, Eagle River, AK 99577
ph. (907)696-2800
ARohde@RohdeArchitects.Com Corp. Auth. #AECC769

NO.	REVISION	DATE

CHUGACH TRAINING BUILDING
9312 VANGUARD DR, ANCHORAGE, AK, 99507

EIC ENGINEERS, INC
ELECTRICAL ENGINEERS
EIC JOB NO: E23-4211
CORP. #AECC1105
6927 OLD SEWARD HWY
SUITE 200
ANCHORAGE, AK 99518
T 907.349.9712
F 907.349.9713
www.eiceng.com

JOB NO.	E23-4211
DATE	08/03/2023
DRAWN	JRW
REVIEWED	EDC

SHEET TITLE:
LIGHTING PLAN

SHEET NO.
E1.1

Project Status

IF THIS SHEET IS LESS THAN: 22"X34" IT IS A REDUCED PRINT
- DO NOT SCALE DIMENSIONS FROM BLUEPRINTS -

8/3/2023 12:06:07 PM C:\Users\JoshuaWarta\EIC Engineers\Design - Files\Projects\E23\E23-4211 Chugach School District Training Office\DES\E23-4211_ESht24_ChugachSchoolDistrictTrainingOffice.rvt
qc:08/03/2023 12:06:04 : fc:2 : !vsOnSht : abuDbl : 0.4;2.4;2.8/2753

THIS SHEET IS FULL SIZE AT 34"x22" | 1" ACTUAL

EQUIPMENT CONNECTION SCHEDULE	
NOTES	
(KEY)	'(x)' DENOTES A GENERAL, NON-REFERENCED, NOTE. NUMBERED NOTES ARE REFERENCED IN THE SCHEDULE.
(A)	REFER TO FLOOR PLAN DRAWINGS FOR EQUIPMENT TYPE REQUIREMENTS, LOCATIONS AND QUANTITIES.
(B)	COORDINATE ALL CONNECTION REQUIREMENTS WITH ACTUAL EQUIPMENT SUPPLIED PRIOR TO ROUGH-IN.
(C)	COORDINATE AND PROVIDE SPECIFIC SIZING OF OVERLOADS AND FUSES WITH EQUIPMENT NAMEPLATES.
(D)	FRACTIONAL HP TYPE MOTOR SWITCH WHERE AUTO CONTROL IS REQUIRED PROVIDE 'RELAY IN BOX'.
1	NOT USED.

SCHEDULE

EQUIP ID	LOCATION OR FUNCTION	KVA	HP	FLA	MCA	MFS	TYPE	CONFIG	V	PH	OPD	FEEDER (MINIMUM) CU UON	NOTES
EF-1	EXHAUST FAN	1.656	3/4				COMBO STARTER		240	1		XX"C, (X)XX AWG, (1)XX AWG EGC	
UH-1	GAS FIRED UNIT HEATER	1.176	1/2				COMBO STARTER		240	1		XX"C, (X)XX AWG, (1)XX AWG EGC	

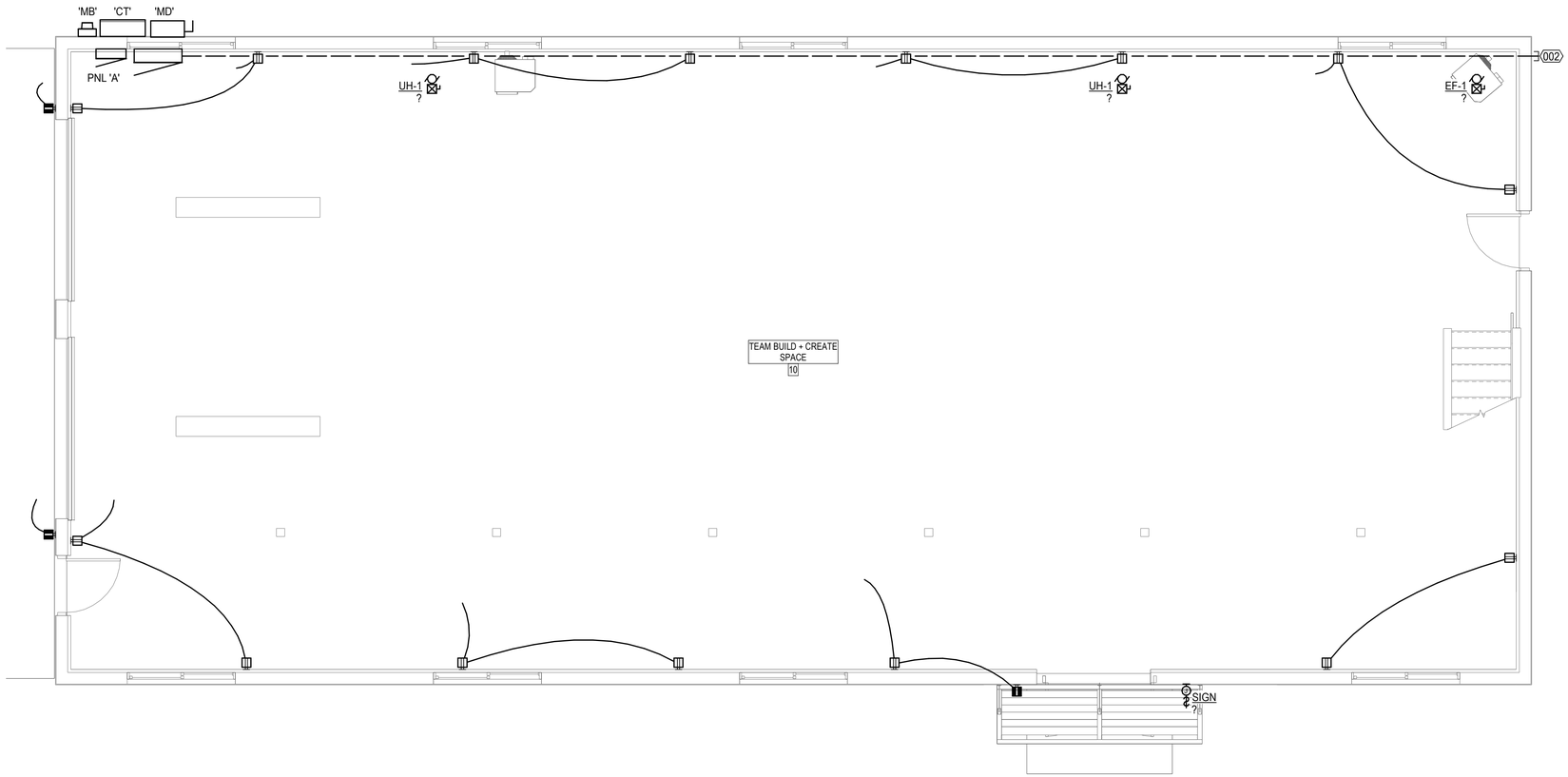

1 E2.1 POWER AND SIGNAL PLAN - LEVEL 1
SCALE: 1/4" = 1'-0"

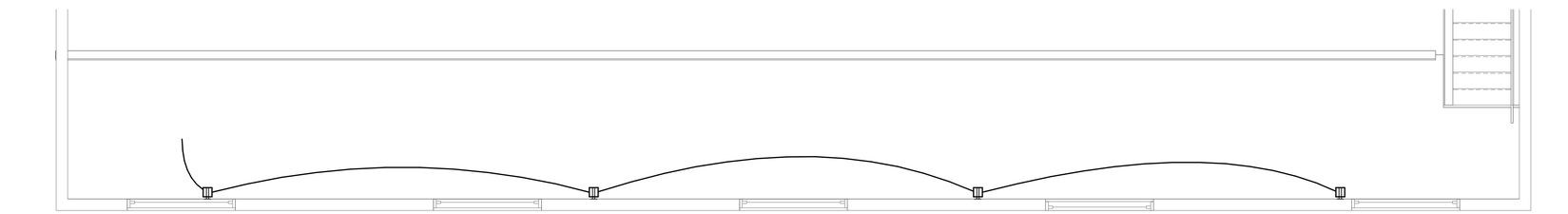

2 E2.1 POWER AND SIGNAL PLAN - MEZZANINE
SCALE: 1/4" = 1'-0"

- MOA STAMP BLOCK -

GENERAL NOTES

1. ALL RECEPTACLES ON LEVEL 1 TO BE MOUNTED AT 24" AFF UNLESS OTHERWISE NOTED.

⟨#⟩ REFERENCED SHEET NOTES

REF	NOTE
002	PROVIDE 2" CONDUIT FROM 'MDP' TO OUTSIDE OF EAST WALL. STUB UP AND CAP AT GROUND LEVEL FOR FUTURE EXPANSION.

STATE OF ALASKA 49TH
PRELIMINARY NOT FOR CONSTRUCTION
JAMES R. OWLING - 9773
PROFESSIONAL ENGINEER

ROHDE ARCHITECTS
Design/Build
Architecture Planning
11925 Old Glenn Hwy., Suite 201, Eagle River, AK 99577
Ph: (907) 696-2800
ARohde@RohdeArchitects.Com Corp. Auth. #AECC769

NO.	REVISION	DATE

CHUGACH TRAINING BUILDING
9312 VANGUARD DR, ANCHORAGE, AK, 99507

EIC ENGINEERS, INC
ELECTRICAL ENGINEERS
EIC JOB NO: E23-4211
CORP. #AECC1105
6927 OLD SEWARD HWY
SUITE 200
ANCHORAGE, AK 99518
T 907.349.9712
F 907.349.9713
www.eiceng.com

JOB NO.	E23-4211
DATE	08/03/2023
DRAWN	JRW
REVIEWED	EDC

SHEET TITLE: POWER AND SIGNAL PLAN

SHEET NO. E2.1

Project Status

IF THIS SHEET IS LESS THAN: 22"X34" IT IS A REDUCED PRINT
- DO NOT SCALE DIMENSIONS FROM BLUEPRINTS -

8/3/2023 12:06:08 PM C:\Users\JosiahWarta\EIC Engineers\Design - Files\Projects\E23\E23-4211 Chugach School District Training Office\DES\E23-4211_ESht24_ChugachSchoolDistrictTrainingOffice.rvt
qc:08/03/2023 12:06:04 - fc:2 : !visOnSht : abuDb! : 0.4;2.4;2.8/2753

1" ACTUAL
THIS SHEET IS FULL SIZE AT 34"x22"

DISTRIBUTION SCCR SCHEDULE
EQUIPMENT SHALL HAVE A SCCR EXCEEDING THE SHORT CIRCUIT AMPS (SCA) OR MINIMUM SCCR, WHICH EVER IS GREATER. EQUIPMENT SHALL BE FULLY RATED. BRANCH CIRCUIT PANELS RATED 225 AMPS OR LESS MAY USE MANUFACTURER TESTED COMBINATIONS PER NEC 240.86(B) AND THE MOTOR LOADS DO NOT EXCEED 1% OF THE LOWEST AIC RATED DEVICE IN THE PANEL PER NEC 240.86(C).
CONTRACTOR TO VERIFY EQUIPMENT TO BE PROVIDED WITH SERVING UTILITY PRIOR TO PROCUREMENT. ANY DECREASE OF TRANSFORMER %Z, CONDUCTOR LENGTHS, OR INCREASE IN TRANSFORMER KVA OR CABLE SIZES TO BE REPORTED TO CONTRACT OFFICER FOR RECALCULATION OF SCA PRIOR TO PROCUREMENT. LENGTHS PROVIDED ARE MINIMUM FOR VALID CALCULATED VALUE AND DO NOT REPRESENT ACTUAL FEEDER LENGTH.

ASSUMED UTILITY SYSTEM CONFIGURATION (BASIS FOR CALCULATION)			
SERVICE TRANSFORMER			
		SCA SECONDARY	
KVA	%Z	LINE-LINE	LINE-NEUTRAL
100	1.40	29,745	47,593

- FOR CALCULATION ONLY - SERVICE LATERAL	
AMPS	FT
400	2EA: (3)3/0 AWG 25

EQUIPMENT ID	SCA	MIN SCCR	XR
A	24,932	28,000	1.69
CT	29,646	33,000	1.91
MD	27,038	30,000	1.79
MDP	26,679	30,000	1.77

FEEDER SCHEDULE		
ID	AMPERAGE	FEEDER (MINIMUM) CU UON
MD	400	2EA: 2"C, (3)3/0 AWG, (1)2 AWG BJ
MDP	400	2EA: 2"C, (3)3/0 AWG, (1)2 AWG EGC
A	200	2"C, (3)3/0 AWG, (1)6 AWG EGC

SERVICE EQUIPMENT SCHEDULE					
NOTES					
(KEY)	'(x)' DENOTES A GENERAL, NON-REFERENCED, NOTE.				
(A)	'MB' DENOTES ELECTRICAL SERVICE METERBASE PER UTILITY STANDARDS.				
1	NOT USED.				
SCHEDULE					
ID	FUNCTION	OPD	VOLTAGE CONFIG	ENCLOSURE	NOTES
CT	CT ENCLOSURE	400 A	240/120V, 1PH, 3W	NEMA 3R	
MD	MAIN DISCONNECT	400 A	240/120V, 1PH, 3W	NEMA 3R	

(#) REFERENCED SHEET NOTES

REF	NOTE

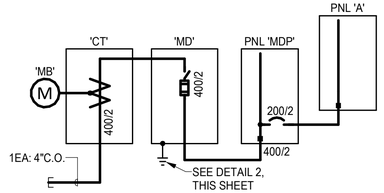

1 E3.1 POWER ONE-LINE DIAGRAM
SCALE: NONE

NOTES:
1. BOND ALL BUILDING STEEL AND METALLIC PIPING TO PROVIDE ELECTRICALLY CONTINUOUS SYSTEMS. BOND HOT AND COLD METALLIC WATER PIPES TOGETHER AT EACH WATER HEATER WITH 8 AWG MINIMUM.
2. PROVIDE RACEWAY FOR ALL ELECTRODE AND BOND CONDUCTORS. RACEWAY TO BE METALLIC IN PLENUM AIR SPACES. BOND METALLIC RACEWAY TO EACH END OF CONDUCTOR.
3. COMBINE GROUNDING ELECTRODE CONDUCTORS PER NEC.

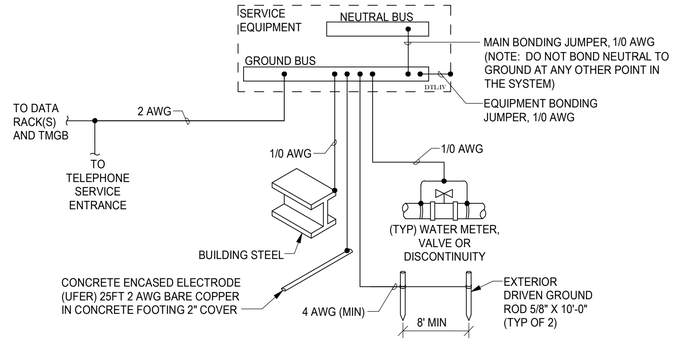

2 E3.1 GROUNDING SYSTEM ONE-LINE DIAGRAM
SCALE: NONE

PANEL SCHEDULE NOTES (COLUMN 'N' OF PANEL SCHEDULE)	
'KEY'	DEFINITION OF REQUIREMENT - NOT ALL KEY NOTES ARE NECESSARILY REFERENCED
A	PROVIDE COMBINATION-TYPE AFCI CIRCUIT BREAKER.
B	PROVIDE CIRCUIT BREAKER RATED FOR "BACKFEED" USE.
C	CONTROL CIRCUIT VIA CONTACTOR.
D	PROVIDE DUAL FUNCTION AFCI AND GFCI CIRCUIT BREAKER.
E	PROVIDE GFPE CIRCUIT BREAKER.
G	PROVIDE GFCI CIRCUIT BREAKER.
L	PROVIDE CIRCUIT BREAKER WITH OEM LOCK-OFF DEVICE FOR USE AS DISCONNECT PER NEC.
N	PROVIDE NEW CIRCUIT BREAKER MATCHING EXISTING BREAKER AIC RATINGS.
O	PROVIDE CIRCUIT BREAKER WITH OEM LOCK ON DEVICE IDENTIFIED WITH RED MARKINGS.
S	PROVIDE SHUNT TRIP CIRCUIT BREAKER CONTROLLED BY ASSOCIATED SYSTEM.

PANEL 'A' SCHEDULE

VOLTAGE: 240/120V, 1PH, 3W
OPD RATING: 200 A
LOCATION: TEAM BUILD + CREATE SPACE 10
ENCLOSURE: NEMA 1
MOUNTING: SURFACE

CKT	N	LOAD DESCRIPTION	AMP	P	A		B		P	AMP	LOAD DESCRIPTION	N	CKT
1		LTG: RM 10	20	1	1.36								2
3		LTG: RM 10	20	1			0.20						4
5													6
7													8
9													10
11													12
13													14
15													16
17													18
19													20
21													22
23													24
25													26
27													28
29													30
31													32
33													34
35													36
37													38
39													40
41													42
		TOTAL KVA/PHASE:			1.4		0.2						
		TOTAL AMPS/PHASE:			11.3		1.7						

SUMMARY BY LOAD TYPE

LOAD CLASSIFICATION	CONNECTED	NEC FACTORS	TOTAL NEC
LTG	1.560 kVA	125.00%	1.950 kVA

PANEL TOTALS
CONNECTED KVA: 1.560 kVA
NEC CALCULATED KVA: 1.950 kVA
CONNECTED AMPS: 7 A
NEC CALCULATED AMPS: 8 A

LOAD CLASSIFICATIONS SCHEDULE	
NOTES	
(A)	NOT ALL LOAD CLASSIFICATIONS ARE NECESSARILY USED. ONLY CLASSIFICATIONS FROM LOADS THAT ARE CONNECTED TO EACH PANEL ARE SHOWN IN THE SUMMARY SECTION OF THE PANEL SCHEDULES.
(B)	PANELBOARD BUS RATINGS TO EQUAL OR EXCEED OPD RATINGS SHOWN IN PANEL SCHEDULES UNLESS OTHERWISE NOTED.
(C)	THE NEC DEMAND PERCENTAGE VALUES SHOWN IN THE PANEL SCHEDULE ARE A WEIGHTED AVERAGE. EXAMPLE 100VA @ 125% PLUS 100VA @100% IS A WEIGHTED AVERAGE OF 112.5% RESULTING IN 225VA NEC COMPUTED DEMAND AND 200VA CONNECTED.

SCHEDULE		
CLASS.	NEC 2020	DESCRIPTION
CONT	210.20(A)	125% OF THE CONTINUOUS LOAD.
ETR	220.87	RECORDED LOAD * 125%. INDIVIDUAL CIRCUITS WITH 0.00 IN THE KVA/PHASE COLUMNS ARE "EXISTING TO REMAIN" LOADS WHICH WERE RECORDED AT THE FEEDER LEVEL AND INCLUDED IN THE SCHEDULE'S SUMMARY SECTION.
KTCH	220.56	TABLE 220.56 - DEMAND FACTORS FOR KITCHEN EQUIPMENT.
LTG	210.20(A)	LIGHTING LOADS CONSIDERED TO BE CONTINUOUS. 125% OF THE CONTINOUS LOAD.
LTGE	210.20(A)	CALCULATED SAME AS 'LTG' BUT EXCLUDED FROM ENERGY LIGHTING POWER DENSITY CALCULATIONS.
MTR	430.24	125% OF THE FULL-LOAD CURRENT RATING OF THE HIGHTEST RATED MOTOR PLUS THE SUM OF THE FULL-LOAD CURRENT RATINGS OF ALL OTHER MOTORS.
NCDN	220.60	NONCOINCIDENT LOADS: WHERE TWO OR MORE LOAD ARE UNLIKELY TO BE IN USE SIMULTANEOUSLY, THE LARGEST LOAD WILL BE USED. LOADS CLASSIFIED AS NCDN WILL HAVE ZERO LOAD.
NCNT	210.20(A)	100% OF THE NON-CONTINUOUS LOAD.
REC	220.44	NON-DWELLING GENERAL USE RECEPTACLES = FIRST 10KVA OR LESS AT 100% PLUS REMAINDER AT 50%.
MCA	(SEE MTR)	THE LOAD IS BASED ON THE GIVEN MCA (MINIMUM CIRCUIT AMPACITY) WHICH INCLUDES 125% OF THE LARGEST MOTOR OF THE UNIT. 100% OF THE MCA LOAD.

SWITCHBOARD 'MDP' SCHEDULE

VOLTAGE: 240/120V, 1PH, 3W
OPD RATING: 400 A
LOCATION: TEAM BUILD + CREATE SPACE 10
ENCLOSURE: NEMA 1
MOUNTING: SURFACE

CKT	N	LOAD DESCRIPTION	POLES	TRIP	A	B	NOTES
1		PANEL 'A'	2	200 A	1.4	0.2	
2	--	PREPARED SPACE	2	200 A	0.0	0.0	
3	--	PREPARED SPACE	2	200 A	0.0	0.0	
4	--	PREPARED SPACE	2	100 A	0.0	0.0	
5	--	PREPARED SPACE	2	100 A	0.0	0.0	
6	--	PREPARED SPACE	2	100 A	0.0	0.0	
7	--	PREPARED SPACE	2	100 A	0.0	0.0	
8	--	PREPARED SPACE	2	200 A	0.0	0.0	
				TOTAL KVA/PHASE:	1.4	0.2	
				TOTAL AMPS/PHASE:	11.3	1.7	

LOAD CLASSIFICATION	CONNECTED	NEC FACTOR	TOTAL NEC
LTG	1.560 kVA	125.00%	1.950 kVA

PANEL TOTALS
CONNECTED KVA: 1.6 kVA
NEC CALCULATED KVA: 2.0 kVA
CONNECTED AMPS: 6.5 A
NEC CALCULATED AMPS: 8.1 A

- MOA STAMP BLOCK -

STATE OF ALASKA
49TH
PRELIMINARY NOT FOR CONSTRUCTION
OWLING
9773
PROFESSIONAL ENGINEER

ROHDE ARCHITECTS
Design/Build
Planning
Architecture
11525 Old Glenn Hwy., Suite 201, Eagle River, AK 99577
ph. 907.696.2800
ARohde@RohdeArchitects.Com Corp. Auth. #AECC769

NO.	REVISION	DATE

CHUGACH TRAINING BUILDING
9312 VANGUARD DR, ANCHORAGE, AK, 99507

EIC ENGINEERS, INC
ELECTRICAL ENGINEERS
EIC JOB NO: E23-4211
CORP. #AECC1105
6927 OLD SEWARD HWY
SUITE 200
ANCHORAGE, AK 99518
T 907.349.9712
F 907.349.9713
www.eiceng.com

JOB NO.	E23-4211
DATE	08/03/2023
DRAWN	JRW
REVIEWED	EDC

SHEET TITLE:
ONE-LINE DIAGRAMS, DETAILS, AND SCHEDULES

SHEET NO.
E3.1

Project Status

IF THIS SHEET IS LESS THAN: 22"X34" IT IS A REDUCED PRINT
- DO NOT SCALE DIMENSIONS FROM BLUEPRINTS -

8/3/2023 12:06:08 PM C:\Users\JoshaWarta\EIC Engineers\Design - Files\Projects\E23\E23-4211 Chugach School District Training Office\DES\E23-4211_ESht24_ChugachSchoolDistrictTrainingOffice.rvt
qc:08/03/2023 12:06:04 : fc:2 : !visOnSht : abuDbl : 0.4;2.4;2.8/2753

1" ACTUAL

THIS SHEET IS FULL SIZE AT 34"x22"

MECHANICAL SYMBOL LEGEND

PIPING SYMBOLS

SYMBOL	ABBR.	DESCRIPTION
———	W	WASTE
- - - - - -	V	VENT
—— – ——	CW	COLD WATER
—— – – ——	HW	HOT WATER
—— – – – ——	HWC	HOT WATER RECIRCULATION
--GHR--	GHR	GLYCOL HEATING RETURN
——GHS——	GHS	GLYCOL HEATING SUPPLY
--SMR--	SMR	SNOW MELT RETURN
——SMS——	SMS	SNOW MELT SUPPLY
——G——	G	LOW PRESSURE GAS
		DEEP SEAL TRAP
		PIPE ELBOW DOWN
		PIPE ELBOW UP
		UNION
	GV/SOV	GATE VALVE/SHUT-OFF VALVE
		PLUG VALVE
		GAS COCK
		GLOBE VALVE
	MOV	MOTOR OPERATED VALVE 2-WAY
	MOV	MOTOR OPERATED VALVE 3-WAY
	PRV	PRESSURE REDUCING VALVE
	RV	RELIEF VALVE
	CV	CHECK VALVE
		BALL VALVE (FULL PORT)
		STRAINER
		THERMOMETER
		PRESSURE GAUGE W/ISO. VALVE
		SOLENOID VALVE
	BV	BALANCING VALVE
		BUTTERFLY VALVE
		FLEX CONNECTION
Y	WHA	WATER HAMER ARRESTER (Y=SIZE)
		AUTOMATIC FLOW CONTROL
	CO	CLEAN-OUT
	WCO	WALL CLEAN-OUT
	FCO	FLOOR CLEAN-OUT
	FD	FLOOR DRAIN
		PIPE ANCHOR
		PIPE GUIDE

HVAC SYMBOLS

SYMBOL	ABBR.	DESCRIPTION
		NEW DUCTWORK
	S.L.	ACOUSTICALLY LINED DUCT
		THERMALLY INSULATED DUCT
UP		DUCTWORK UP
DN		DUCTWORK DOWN
		TURNING VANES
		AIR EXTRACTOR
	S/A	SUPPLY REG., GRILLE OR DIFFUSER
	R/A	RETURN/EXHAUST REG. OR GRILLE
		SUPPLY
		RETURN OR EXHAUST
		SUPPLY AIR SLOT WITH FLEX DUCT
		RETURN AIR SLOT
		FLEXIBLE DUCT
		FLEXIBLE CONNECTION
VD	VD,BD	VOLUME DAMPER
FD	FD	FIRE DAMPER
FS	FSD	FIRE/SMOKE DAMPER
D	MOD	MOTOR OPERATED DAMPER
20"X12"		DUCT SIZE
	HC	HEATING COIL
	S/A	SUPPLY AIR
	R/A	RETURN/RELIEF AIR
	E/A	EXHAUST AIR
	O/A	OUTSIDE AIR
DD	DD	DUCT DETECTOR
		ACCESS PANEL
T T	T'STAT	THERMOSTAT,& W/INS. BASE
SP		STATIC PRESSURE SENSOR
S		SWITCH

ABBREVIATIONS

ABBR.	DESCRIPTION
EAT	ENTERING AIR TEMPERATURE
LAT	LEAVING AIR TEMPERATURE
EWT	ENTERING WATER (GLYCOL) TEMP.
LWT	LEAVING WATER (GLYCOL) TEMP.
AFF	ABOVE FINISHED FLOOR
AFG	ABOVE FINISHED GRADE
BDD	BACK DRAFT DAMPER
BG	BELOW GRADE
SS	STAINLESS STEEL
TP	TRAP PRIMER
VTR	VENT THRU ROOF
OADB	OUTSIDE AIR DRY BULB
AAV	AUTOMATIC AIR VENT

DIFFUSER KEY

DIFFUSERS, GRILLES, AND REGISTERS SYMBOL:

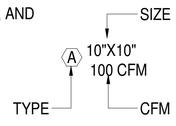

SYMBOLS DO NOT NECESSARILY APPEAR ON PLANS IN SAME SIZE AND PROPORTION AS SHOWN HERE.

PLANS DO NOT NECESSARILY USE ALL OF THE SYMBOLS SHOWN HERE.

MECHANICAL SPECIFICATIONS

GENERAL:

1. THESE DRAWINGS ARE DIAGRAMATICAL IN NATURE AND DO NOT SHOW ALL FITTINGS AND/OR ACCESSORIES NECESSARY FOR A COMPLETE, FUNCTIONAL AND COORDINATED INSTALLATION. IT IS THE RESPONSIBILITY OF THE CONTRACTOR TO COORDINATE THEIR WORK WITH OTHER TRADES AND WITH FIELD CONDITIONS.
2. ALL PLUMBING PIPING SHALL BE PER THE ULNIFORM PLUMBING CODE, 2018 EDITION AND ALL LOCAL AMENDMENTS.
3. ALL MECHANICAL WORK SHALL BE PER THE INTERNATIONAL MECHANICAL CODE, 2018 EDITION AND ALL LOCAL AMENDMENTS.
4. ALL PENETRATIONS THROUGH FIRE RATED CONSTRUCTION (FIRE BARRIERS, SHAFTS AND HORIZONTAL ASSEMBLIES) MUST COMPLY WITH IBC CHAPTER
5. THE CONTRACTOR SHALL SECURE AND PAY FOR ALL PERMITS AND FEES.
6. THE CONTRACTOR SHALL PROVIDE SUBMITTAL DATA ON ALL MECHANICAL SYSTEMS. THIS INFORMATION SHALL BE BOUND IN A THREE RING BINDER, PROPERLY MARKED AND TAGGED. DATA SUBMITTED SHALL BE COMPLETE AND SUBMITTED AT ONE TIME AS PARTIAL SUBMITTALS WILL BE RETURNED WITHOUT REVIEW. SUBMITTALS SHALL BE CLEARLY MARKED TO INDICATE EXACT ITEM TO BE SUPPLIED.
7. NO SUBSTITUTION OF MATERIALS WILL BE ALLOWED WITHOUT OWNERS APPROVAL.
8. AT THE END OF THE PROJECT PROVIDE THE OWNER WITH THREE COPIES OF AN OPERATION AND MAINTENANCE MANUAL ASSEMBLED SPECIFICALLY FOR THIS PROJECT FOR ALL MECHANICAL EQUIPMENT FURNISHED UNDER THIS CONTRACT. INFORMATION SHALL BE COMPLETE AND SHALL PROVIDE SPECIFICATION, OPERATION AND MAINTENANCE INFORMATION, WARRANTY INFORMATION, AS WELL AS SOURCES OF REPLACEMENT PARTS.
9. PROVIDE A COMPLETE SET OF AS-BUILT DRAWING AT THE END OF THE PROJECT, DRAWINGS SHALL SHOW ALL CHANGES MADE TO THE PROJECT DURING CONSTRUCTION. AS-BUILT OF CONTROL DRAWINGS SHALL ALSO BE INCLUDED.
10. ALL WORK PERFORMED UNDER THIS CONTRACT SHALL BE FREE FROM DEFECTS FOR A PERIOD ON ONE YEAR AFTER ACCEPTANCE OF THE PROJECT BY THE OWNER. THIS SHALL INCLUDE MATERIALS, EQUIPMENT AND WORKMANSHIP. ALL DEFECTS SHALL BE REPLACED OR REPAIRED TO THE OWNERS SATISFACTION.
11. PROVIDE MANUFACTURERS RECOMMENDED CLEARANCE AND ACCESS TO ALL EQUIPMENT.
12. ALL PIPING, DUCT WORK, AND EQUIPMENT SHALL BE SEISMICALLY RESTRAINED IN ACCORDANCE WITH THE SMACNA SEISMIC RESTRAINT MANUAL FOR MECHANICAL SYSTEMS.

SHEET METAL:

1. DUCTWORK SHALL BE FABRICATED SHEET METAL AND INSTALLED IN ACCORDANCE WITH SMACNA HVAC DUCT CONSTRUCTION STANDARDS.
2. DIMENSIONS SHOWN FOR DUCTWORK ARE THE INSIDE CLEAR DIMENSIONS. CONTRACTOR SHALL ADD TO THE DUCT ALLOWANCES FOR SOUND LINING.
3. PAINT INTERIOR OF ALL DUCTWORK VISIBLE THROUGH GRILLES, REGISTERS AND DIFFUSERS FLAT BLACK.

PIPING:

1. WASTE, AND VENT PIPE SHALL BE "ABS" PIPING WITH DRAIN, WASTE & VENT FITTINGS AND SHALL BE INSTALLED AND TESTED PER THE REQUIREMENTS OF THE LATEST ADOPTED EDITION OF THE UNIFORM PLUMBING CODE. PROVIDE BACKFLOW PREVENTERS WHERE REQUIRED BY THE UPC AND OR THE LOCAL AUTHORITIES.
2. VALVES FOR PLUMBING SYSTEMS SHALL BE BALL VALVES. PROVIDE ISOLATION VALVES FOR EACH FIXTURE BATTERY AND WHERE INDICATED ON DRAWINGS.
3. NATURAL GAS PIPING SHALL BE SCHEDULE 40 STEEL PIPE WITH THREADED FITTINGS. VALVES SHALL BE AGA APPROVED.

HEATING:

1. HEATING EQUIPMENT SHALL BE COMMERCIAL GRADE COMPLETE WITH ALL SAFETIES AND TRIM. FOR INFORMATION ON MODEL ETC., SEE EQUIPMENT SCHEDULES.

INSULATION:

1. INSULATE EXHAUST DUCT WORK FROM FAN TO THE EXTERIOR.
2. 2" INSULATION ON ALL OSA, AND RELIEF AIR DUCTWORK.

CONTROLS:

1. THE CONTRACTOR SHALL PROVIDE A COMPLETE AND OPERATIONAL CONTROL SYSTEM AS REQUIRED TO PROVIDE EQUIPMENT CONTROL.

BALANCING:

1. BALANCE HVAC & PLUMBING SYSTEMS USING NATIONAL ENVIROMENTAL BALANCING BUREAU (NEBB) RECOMMENDED PROCEDURES.

STATE OF ALASKA 49 TH NOT FOR CONSTRUCTION Thomas W. Spurlock III 12345 xx/xx/xx REGISTERED PROFESSIONAL ENGINEER

ROHDE ARCHITECTS
Architecture Planning Design/Build
1925 Old Glenn Hwy., Suite 201, Eagle River, AK 99577
ph. (907)696-2660 fax (907)696-2662
ARohde@Rohde4chitects.Com Comp. Auth. #AECC769

NO.	REVISION

C.S.D. - TRAINING OFFICE
9312 Vanguard Drive Anchorage, Alaska

SAI CONSULTING ENGINEERS
SPURLOCK & ASSOCIATES, INC.
3705 ARCTIC BLVD.#1567
ANCHORAGE, AK. 99503
1150 S. COLONY WAY ST. 3
PMB 370
PALMER, AK 99645
AECC 734

JOB NO.	23918
DATE	08/01/23
DRAWN	BKS
REVIEWED	TWS

SHEET TITLE:
LEGENDS, ABBREVIATIONS & SCHEDULES

SHEET NO.
M1.1

65% submittal

IF THIS SHEET IS LESS THAN: 22"X34" IT IS A REDUCED PRINT
- DO NOT SCALE DIMENSIONS FROM BLUEPRINTS -

8/2/2023 12:55:00 PM C:\Users\tom\Dropbox\Projects\23-Projects\23918\Architect\918Mechanical.rvt

FAN SCHEDULE

TAG	LOCATION	SCFM	RPM	E.S.P.	TYPE	NOM. SIZE	USE	DISC.	MOTOR HP /VOLTS/ PH	REMARKS
EF-1	TEAM BUILD.	2,100	----	0.25"	CENTR.	----	E/A	HORIZ.	3/4/230/1	GREENHECK "BSQ 120-7" WITH DISCHARGE DAMPER, INLET GUARD AND ALL REQUIRED TRIM

EQUIPMENT SCHEDULE

TD-1

TRENCH DRAIN: MEA/JOSAM "MEADRAIN PRO-PLUS C-100" UNITS IN POLYMER CONCRETE WITH BUILT IN PROTECTION OF HD-PE. PROVIDE LAYOUT AS SHOWN ON DRAWINGS. USE DUCTILE IRON GRATES WITH LOCKDOWN & CAST IRON EDGING. PROVIDE WITH SEDIMENT BUCKET. SLOPE UNITS TOWARD SEDIMENT BUCKET.

UH-1

UNIT HEATER: MODINE GAS FIRED UNIT HEATER MODEL "HDS-100". 100 MBH INPUT, 82 MBH OUTPUT. 1,140 CFM, 1/2HP,230 VOLT, FURNISH COMPLETE WITH ALL REQUIRED TRIM TO INCLUDE ALL REQUIRED CONTROLS AND SAFETIES. PROVIDE MANUFACTURERS VENT TERMINATION KIT.

OWS-1

OIL WATER SEPARATOR: STRIEN OIL WATER SEPARATOR MODEL "OS-35", 35 GPM OIL/SAND SEPARATOR. FURNISH COMPLETE WITH ALL REQUIRED TRIM.

STATE OF ALASKA
49 TH
NOT FOR CONSTRUCTION
Thomas W. Spurlock III
ME-6248
XX/XX/XX
REGISTERED PROFESSIONAL ENGINEER

ROHDE ARCHITECTS
Architecture Planning Design/Build
11925 Old Glenn Hwy., Suite 201, Eagle River, AK 99577
ph. (907)696-2960 fax (907)696-2962
ARohde@RohdeArchitects.Com Corp. Auth. #AECC769

NO.	REVISION

C.S.D. - TRAINING OFFICE
9312 Vanguard Drive Anchorage, Alaska

SAI CONSULTING ENGINEERS
SPURLOCK & ASSOCIATES, INC.
3705 ARCTIC BLVD.#1567
ANCHORAGE, AK. 99503
1150 S. COLONY WAY ST. 3
PMB 370
PALMER, AK 99645
AECC 734

JOB NO.	23918
DATE	08/01/23
DRAWN	BKS
REVIEWED	TWS

SHEET TITLE:
MECHANICAL SCHEDULES

65% submittal

IF THIS SHEET IS LESS THAN: 22"X34" IT IS A REDUCED PRINT
- DO NOT SCALE DIMENSIONS FROM BLUEPRINTS -

SHEET NO.
M1.2

THIS SHEET IS FULL SIZE AT 34"x22"
1" ACTUAL

8/2/2023 12:55:00 PM C:\Users\tom\Dropbox\Projects\23-Projects\23918\Architect\918Mechanical.rvt



1 Underground Plumbing Plan
1/4" = 1'-0"

THIS SHEET IS FULL SIZE AT 34"x22"
1" ACTUAL

8/2/2023 12:55:00 PM C:\Users\tom\Dropbox\Projects\23-Projects\23918\Architect\918Mechanical.rvt

STATE OF ALASKA
49 TH
NOT FOR CONSTRUCTION
Thomas W. Spurlock III
ME-6248
REGISTERED PROFESSIONAL ENGINEER

ROHDE ARCHITECTS
Architecture Planning Design/Build
11925 Old Glenn Hwy., Suite 201, Eagle River, AK 99577
ph. (907)696-2960 fax (907)696-2962
ARohde@RohdeArchitects.Com Corp. Auth. #AECC769

NO.	REVISION

C.S.D. - TRAINING OFFICE
9312 Vanguard Drive Anchorage, Alaska

SAI CONSULTING ENGINEERS
SPURLOCK & ASSOCIATES, INC.
3705 ARCTIC BLVD.#1567
ANCHORAGE, AK. 99503
1150 S. COLONY WAY ST. 3
PMB 370
PALMER, AK 99645
AECC 734

JOB NO.	23918
DATE	08/01/23
DRAWN	Author
REVIEWED	Checker

SHEET TITLE:
Underground Plumbing Plan

65% submittal

IF THIS SHEET IS LESS THAN: 22"X34" IT IS A REDUCED PRINT
- DO NOT SCALE DIMENSIONS FROM BLUEPRINTS -

SHEET NO.
M2.0

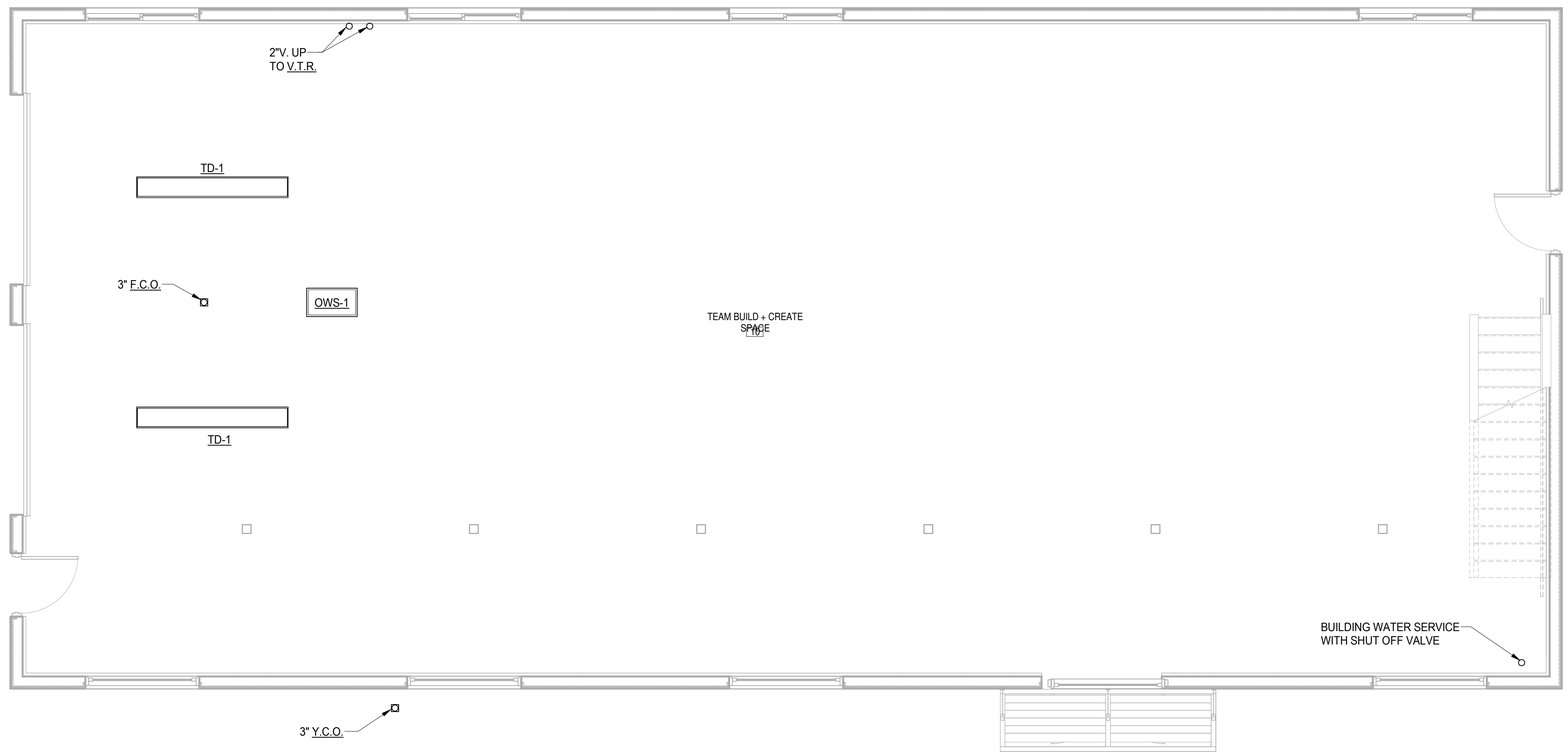

1 Plumbing Plan
1/4" = 1'-0"

THIS SHEET IS FULL SIZE AT 34"x22"
1" ACTUAL

8/2/2023 12:55:01 PM C:\Users\tom\Dropbox\Projects\23-Projects\23918\Architect\918Mechanical.rvt

STATE OF ALASKA
49 TH
NOT FOR CONSTRUCTION
Thomas W. Spurlock III
ME-6248
REGISTERED PROFESSIONAL ENGINEER

ROHDE ARCHITECTS
Architecture Planning Design/Build
11925 Old Glenn Hwy., Suite 201, Eagle River, AK 99577
ph. (907)696-2960 fax (907)696-2962
ARohde@RohdeArchitects.Com Corp. Auth. #AECC769

NO.	REVISION

C.S.D. - TRAINING OFFICE
9312 Vanguard Drive Anchorage, Alaska

SAI CONSULTING ENGINEERS
SPURLOCK & ASSOCIATES, INC.
3705 ARCTIC BLVD.#1567
ANCHORAGE, AK. 99503
1150 S. COLONY WAY ST. 3
PMB 370
PALMER, AK 99645
AECC 734

65% submittal

IF THIS SHEET IS LESS THAN: 22"X34" IT IS A REDUCED PRINT
- DO NOT SCALE DIMENSIONS FROM BLUEPRINTS -

JOB NO.	23918
DATE	08/01/23
DRAWN	Author
REVIEWED	Checker

SHEET TITLE:
Plumbing Plan

SHEET NO.
M2.1

THIS SHEET IS FULL SIZE AT 34"x22"

1" ACTUAL

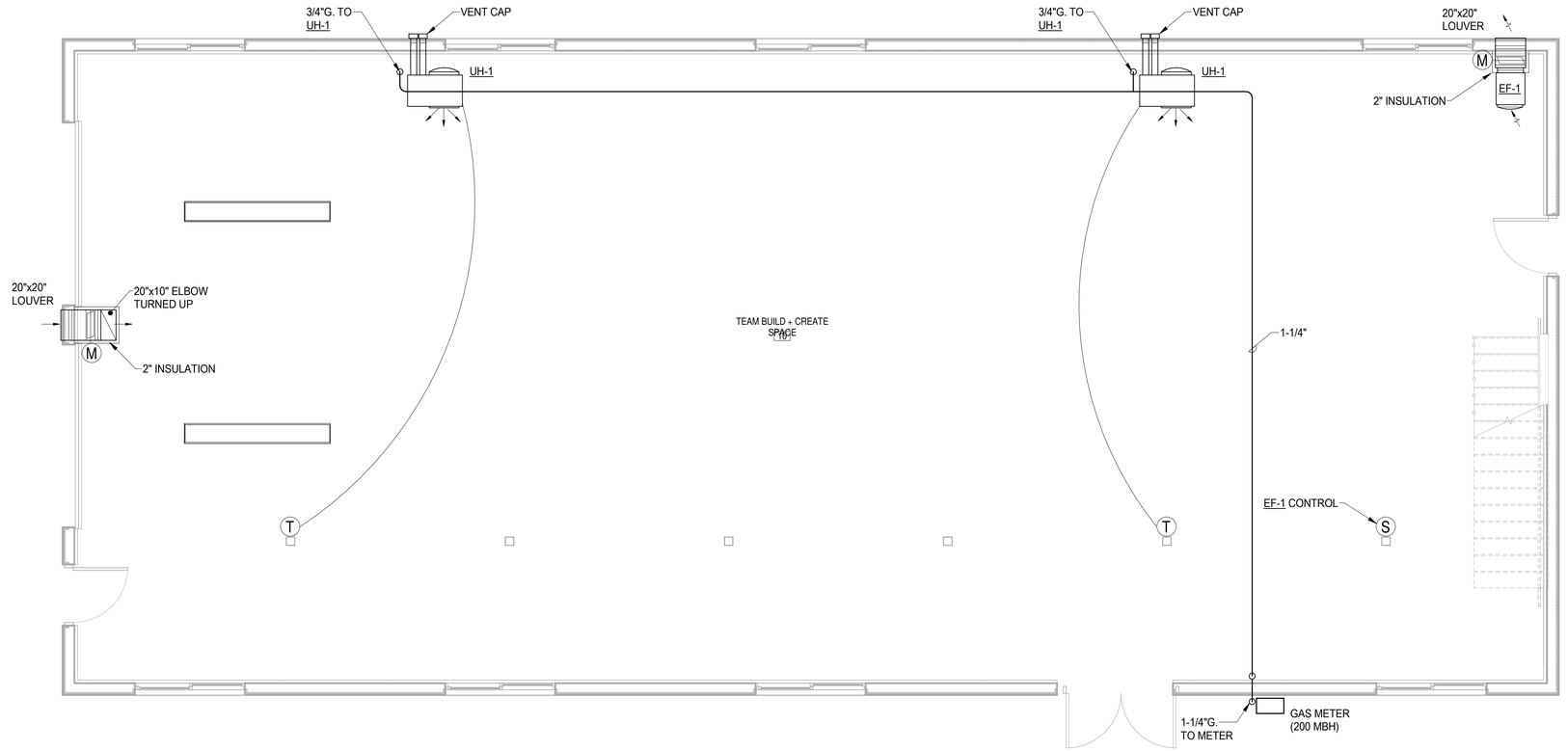

1 HVAC Plan
1/4" = 1'-0"

STATE OF ALASKA
49 TH
NOT FOR CONSTRUCTION
Thomas W. Spurlock III
ME-6248
REGISTERED PROFESSIONAL ENGINEER

ROHDE ARCHITECTS
Architecture Planning Design/Build
1525 Old Glenn Hwy., Suite 201, Eagle River, AK 99577
Ph. (907)696-2660 Fax (907)696-2661
ARohde@Rohde4Architects.Com Comp. Auth. #AECC769

NO.	REVISION

C.S.D. - TRAINING OFFICE

9312 Vanguard Drive Anchorage, Alaska

SAI CONSULTING ENGINEERS
SPURLOCK & ASSOCIATES, INC.
3705 ARCTIC BLVD.#1567
ANCHORAGE, AK. 99503
1150 S. COLONY WAY ST. 3
PMB 370
PALMER, AK 99645
AECC 734

65% submittal

IF THIS SHEET IS LESS THAN: 22"X34" IT IS A REDUCED PRINT
- DO NOT SCALE DIMENSIONS FROM BLUEPRINTS -

JOB NO.	23918
DATE	08/01/23
DRAWN	Author
REVIEWED	Checker

SHEET TITLE:
HVAC Plan

SHEET NO.
M3.1

8/2/2023 12:55:01 PM C:\Users\tom\Dropbox\Projects\23-Projects\23918\Architect\918Mechanical.rvt

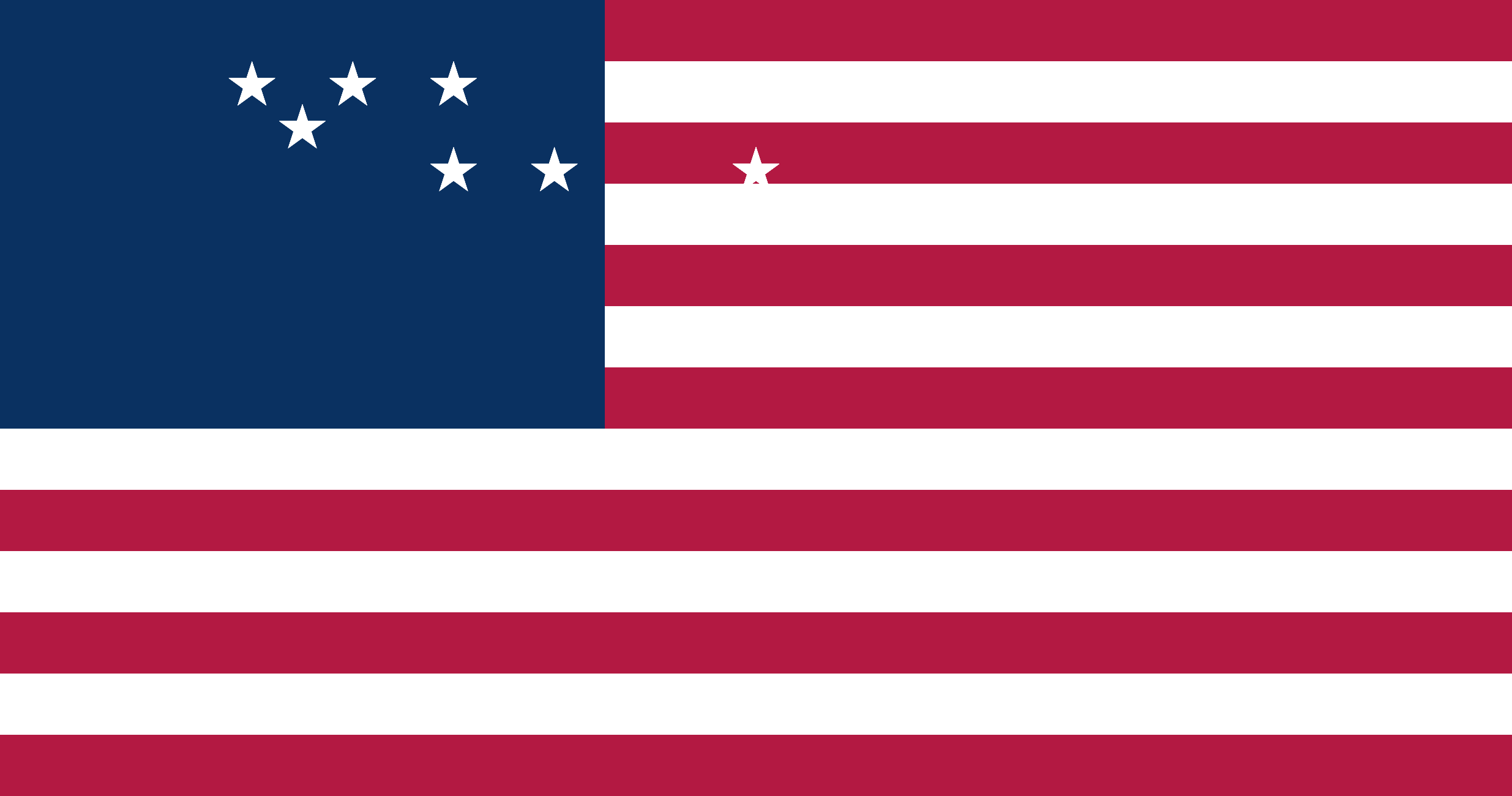

APEX
Alaska Performance Excellence
2009 Award Recipient

Chugach School District

9312 Vanguard Drive
Anchorage, AK 99507-5355
(907) 522-7400 Phone
(907) 522-3399 Fax
www.chugachschools.com

Malcolm Baldrige National Quality Award
2001 Award Recipient

Charlene Arneson, President – Gail Evanoff, Vice President
David Totemoff, Member – Deserae Stellwag, Member – Wayne Shen, Member

CHUGACH SCHOOL DISTRICT BOARD MEETING
UNAPPROVED MINUTES – June 1, 2023

1. CONVENED MEETING JUNE 1, 2023 9:00AM

2. MEMBERS PRESENT:
Board Members Present: Charlene Arneson, Board President; Gail Evanoff, Vice President - Zoom; David Totemoff, Board member; Deserae Stellwag, Board Member; Wayne Shen, Board Member - Zoom

3. WORK SESSION:

4. SCHOLARSHIP PROGRAM FUNDRAISING AND FINANCES

5. SCHOLARSHIP APPLICATION REVIEW AND SELECTION

6. REVIEW STRATEGIC PLAN AND BOARD GOALS

7. DOUG PENN END OF YEAR REPORT

8. RYAN SCHMIDT END OF YEAR REPORT

9. CHIEF SCHOOL ADMINISTRATOR REPORT

10. WORK SESSION CONCLUDED 11:30AM

11. CONVENE REGULAR MEETING 1:05PM
Board Members Present: Charlene Arneson, Board President; Gail Evanoff, Vice President - Zoom; David Totemoff, Board member; Deserae Stellwag, Board Member; Wayne Shen, Board Member - Zoom

12. APPROVAL OF AGENDA – June 1, 2023 Action

Moved by D. Totemoff, seconded by G. Evanoff
to approve June 1, 2023 agenda.

Voice Vote: 5 ayes, 0 nays, passed unanimously.

13. PLEDGE OF ALLEGIANCE
14. MISSION/VISION STATEMENT, LAND ACKNOWLEDGMENT
Vision Statement: W. Shen

Mission Statement: G. Evanoff
Chugach School District Mission Statement: T. Mase
Land Acknowledgement: D. Stellwag

15. APPROVAL OF MINUTES – April 13, 2023 and April 27, 2023Minutes Action

Moved by G. Evanoff, seconded by W. Shen
to approve both April 13, 2023 and April 27, 2023Minutes.

Voice Vote: 5 ayes, 0 nays, passed unanimously.

16. INTRODUCTION OF GUESTS and/or ANNOUNCEMENTS
S. Jackson, Board Secretary
R. Schmidt, Tech and Facilities Coordinator
S. Burgoon, Whittier and Voyage Principal
D. Penn, District Principal
J. Hawk, FOCUS Fairbanks Secretary
M. Rowland, Teacher
D. Treece, Director of Student Services

16.a. SCHOLARSHIP RECIPIENTS
Elaina Hanson
Amie Salzman
Cha'Miya Hines

17. BOARD OF STARS
Read by S. Jackson, S. Burgoon
Doug Penn by Nichole and Jed Palmer
Anna Gregorieff by Deserae Stellwag
Jed & Nichole Palmer by Deserae Stellwag
Joseph Cross by Chenega EAC
Jaimie Gilson by Lori Montes
Gail Evanoff by Lisa Lane
Nichole Palmer by Lisa Lane
Annie Dougherty by Doug Penn
Lela Lazaros by Doug Penn
Serena Jackson by Doug Penn

18. REPORTS AND PRESENTATIONS

18.a. EAC Minutes
Chenega EAC Minutes

18.b. PROGRAM LEAD REPORTS
1. Doug Penn Report Summary
2. Ryan Schmidt Report Summary
3. Ty Mase Report Summary
3. Debbie Treece Report
4. Stephanie Burgoon Report
5. Tanya Wimer Report - Unavailable

19. PUBLIC COMMENT ON AGENDA ITEMS
None

20. BOARD REPORTS
Speaker(s): DAVID TOTEMOFF, GAIL EVANOFF, DESERAE STELLWAG, WAYNE SHEN, CHARLENE ARNESON

21. ITEMS OF BUSINESS

21.a. MEMO 23-19 CSD BUDGET - Second Reading Action

Moved by D. Totemoff, seconded by D. Stellwag
Approving the FY24 operating budget for Chugach School District.

Voice Vote: 5 ayes, 0 nays, passed unanimously.

21.b. 2022/2023 BUDGET AND CIP EXPENSES Informational
Read by Ty Mase

21.c. MEMO 23-20 DEFERRED COMPENSATION MATCH Action

Moved by D. Totemoff, seconded by D. Stellwag
Authorizing a FY23 Empower Chugach School District contribution of 1.5% to eligible Chugach School District employee accounts.

Voice Vote: 5 ayes, 0 nays, passed unanimously.

22. OLD BUSINESS - None

23. NEXT BOARD MEETING:
August 17, 2023 10:30 A.M. Work Session and Business Meeting at 1:00 P.M. at the District Office in person.

24. ADJOURNMENT @ 3:28 PM

Moved by W. Shen, seconded by D. Stellwag to adjourn at 3:28 PM.

Voice Vote: 5 ayes, 0 nays, passed unanimously.

Recorded by: _____
Serena Jackson, Board Secretary Date

Attested to by: _____
Board President or Vice President Date

Attested to by: _____
Ty Mase, Chief School Administrator Date

Chugach School District

9312 Vanguard Drive, Suite 100
Anchorage, AK 99507-5355
(907) 522-7400 Phone
(907) 522-3399 Fax
www.chugachschooldistrict.com

Date: September 15, 2023

To: Chugach School Board

From: Ty Mase

RE: Chief School Administrator's Report – September, 2023

HR Update: We have a handful of talented new CSD staff this school year. Please join me in welcoming:

1. Tim Bloodgood - Whittier
2. Jane Alzner - Whittier
3. Megan Maloney - Whittier
4. Camille Parry - Chenega
5. Suzanne Parker Chenega
6. Adeline Knavel – Student Teacher Voyage/Whittier

Capital Projects: I am pleased to report that we have FINALLY completed the preliminary planning processes and our Tatitlek and Chenega CIP projects went out to bid on September 7th. Bid Documents will also be available to bidders through The Plans Room on Sept 7.

The bid opening will be Oct 19 at 3:00pm at BDS Architects. CSD staff will meet with BDS on the morning of the 20th to award the project. Once awarded, there is a 10-day protest period.

A reminder that we will be bidding the two projects together for logistical and financial efficiency. In addition, CSD is required to comply with the state procurement processes and our selection will need to comply with these processes. The process to select a contractor will be laid out for us and will be fairly black and white.

Student Enrollment – Where we stand:

- Whittier - 51
- Chenega – 11
- Tatitlek - 11
- Focus Fairbanks - 289
- Focus Valdez - 66
- Focus Anchorage/Mat Su - 184

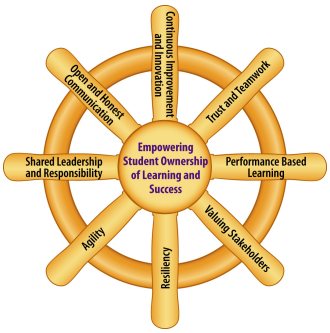

Chugach School District

9312 Vanguard Drive, Suite 100
Anchorage, AK 99507-5355
(907) 522-7400 Phone
(907) 522-3399 Fax
www.chugachschooldistrict.com

Grants:
We are continuing to aggressively pursue soft monies through available grant competitions. Last spring we wrote and were awarded a literacy grant through DEED. This grant will provide approximately $250,000 to help us with staffing support, professional development, and literacy interventions. This is a one-year grant.

We were also awarded a preschool support grant through DEED which allows us to continue services to our pre-k kiddos. This is a 3-year grant.

Lastly, we are submitting, or are writing, several science grants: the NOAA Science Grant, the Battelle Grant and the Office of Naval Research Grant**.**

CSA Goals:

1. Refine processes, policies, and procedures
2. Focus on instructional design and innovation
3. Encourage shared leadership
4. Embrace financial and facility efficiencies

Aurora Institute:
With a professional goal of improving instructional design and innovation, I am super excited for this year's Aurora Conference, October 14-20. This is the largest competency-based conference in the United States and promises to have something for everyone. I would like to again personally thank the Board for supporting this professional development opportunity for our staff.

I would also like to thank Debbie Treece who is making sure the logistics of a trip like this run smoothly and do not interfere with the actual experience! We are in good hands – thank you Debbie.

Important Dates to Remember:

- October 2-27 Student Count Period
- October 3 Local Election
- October 9 Indigenous Peoples Day
- October 19-21 AFN
- November 7-8 Next Board Meeting?
- November 9-12 AASB Annual Conference
- December 8-9 AASBs School Law and Equity

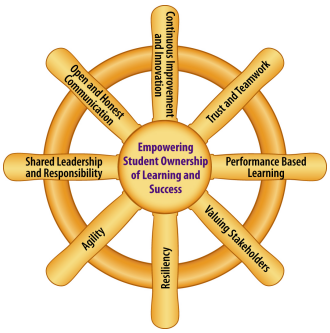

Chugach School District

9312 Vanguard Drive, Suite 100
Anchorage, AK 99507-5355
(907) 522-7400 Phone
(907) 522-3399 Fax
www.chugachschooldistrict.com

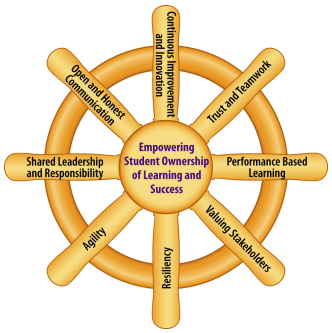

Chugach School District

9312 Vanguard Drive, Suite 100
Anchorage, AK 99507-5355
(907) 522-7400 Phone
(907) 522-3399 Fax
www.chugachschooldistrict.com

September 8, 2023

Welcome Back to Another CSD School Year!

It is hard to believe that fall is here, the leaves are changing, there's termination dust on the mountains, and our schools are now all in full swing. We are pleased to report that we are off to a great start with our first several weeks of school running smoothly. As I enter my 15th year as a district lead, I can honestly say that I am just as excited for this school year as any in the past. Our new staff are as good as they come and we have a great veteran staff returning to us. It promises to be a very solid year!

A reminder that our teachers and staff cannot do it alone, your partnership is invaluable. I encourage all of you, our parents and stakeholders, to look for ways to help support our schools/programs in any way you can. Chugach is a very special place and we are known nationwide as a district that offers a world-class competency-based education – please help us keep it that way! Your help and support are appreciated and make a huge difference in what we can accomplish.

As always, the doors are open and we hope you stop by your school to see what is happening in the classrooms. Open communication between home and school is a cornerstone of success. As well, the district office is just a phone call or email away – we are here to help. We welcome your involvement, questions, and insights as we work together to provide the best possible education for your children.

Here's to a fantastic school year ahead!

Sincerely,

Ty Mase, Chief School Administrator

Dear President Arenson, Superintendent Mase and the entire School Board,

Please accept our sincere thank you for hosting our board of directors during our annual summer meeting. Your team at Chugach SD did everything possible to make this event successful. Your willingness to house some of us and allow us to use your beautiful kitchen and dining areas as well as your classroom for our meeting was so appreciated. Allowing us use of your van and car was made the entire meeting so much easier.

Stephanie Bugoon was a delight to work with and we appreciate her help with everything in the Voyager Center. Serena Jackson was there to help our team with all the little things we needed as well. There is nothing your staff did not think about and plan for us during the visit.

As a small token of our thanks, we would like to offer you a free workshop for your board at any time in the year ahead. Simply let us know when you would like to use this and we will waive the workshop fee.

Again, we appreciate all that CSD does for the students in your region and for all the other districts in the state.

Smiles,

Timi C. Tullis
Associate Executive Director

Upon receipt of an invoice simply call Timi or Laurie Miller at 907-463-1660 and let us know you'd like to use your 'free' workshop.

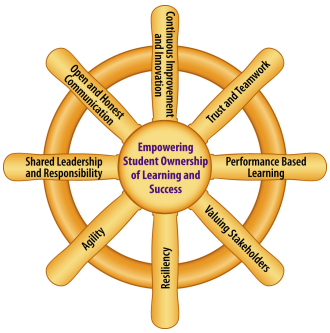

Chugach School District

9312 Vanguard Drive, Suite 100
Anchorage, AK 99507-5355
(907) 522-7400 Phone
(907) 522-3399 Fax
www.chugachschooldistrict.com

8-22-23

Alaska Department of Education and Early Development
Office of the Commissioner
PO Box 110500
Juneau, AK 99811-0500

Commissioner Deena M. Bishop, Ed.D.,

I am writing, on behalf of Chugach School District (CSD), to request permission, under 4 AAC 33.090(h), for our variable-term residential program to report the number of students housed for FY24 on October 6, 2023 instead of the last day of the student count period. This date more accurately reflects the numbers of students CSD will house throughout the school term.

Your consideration is much appreciated.

Respectfully,

Ty Mase, Chief School Administrator

EAC Agenda September 7, 2023

Melonie, Gail, Camille, Sue, Terri

1. Election of Officers: same

2. Student Council Report: Today the kids elected officers. Gabby – P, Jubal – VP, Aniska – Secretary. Sept 20, next meeting – debrief about Heritage week. Gail asked about student council funds and money that was owed by adults in the community from the class trip. Teachers stated that since we do not have paperwork to show exactly who owes what, only a say so of past teachers, they are not comfortable asking for repayment of the debt owed to the student council.

Student representative for the school board?

3. Heritage Week Update:
    a. Gear – ordered. Ready by 15th for pickup. Doug will pick up and bring with him to Chenega for Heritage week. Student council decided that t-shirts could be given to students.
    b. Transportation – OMC will be picking up Tatitlek students between 10:30 and 11:00 Sunday, 9/17. Gail asked what kind of insurance for the kids to be able to go on the OMC for travel and hunt. Camille will check on it again with Doug.
    c. Lodging – Chenega Corp is donating 2 houses for Tatitlek guests
    d. Meals – Food arrived yesterday for the meals
    e. Hunt – 6-12 will be allowed to go on the hunt
    f. Volunteers – Asking the community and others to help with meals, Gail said she would help

    Doug & Cheryl will be coming in on Monday seat fare. Coastal studies people will be coming in on seat fare on Monday.

4. Halloween Carnival: Student council asked if they could have the carnival on Halloween. 4-6 pm so they are done before time to go trick or treating. Student council would like to have good concessions and not charge for all games. Cake walk, soda ring toss and maybe a pie in the face game could be charged for. Concessions would be charged for. Student council will meet again in 2 weeks to further discuss.

5. Class Trips: Teachers do not want to do class trips. Do not feel comfortable taking students out of state. Do not feel comfortable taking younger students.
    a. Camille stated that in 11 years of working to raise money, her children did not benefit from any of the fundraising. This is something that could happen to any

student and/or family, due to illness or the timing of the trip. Student council funds could be used for something that would be a better benefit for the entire community and school more than once every few years.

b. Melonie stated that maybe we can take the students on the ferry and go to an educational site wildlife center or other places within state.
c. Gail stated that we have a lot to see in the state of Alaska.

6. Inservice: Palm Springs California for 7 days in October. Teachers leave on Oct 13 and return on October 20. School will be out of session during that time.

7. Teacher reports –
    a. Sue – DIBELS testing.
    b. Camille – gothic novels with students. Very kid friendly – Night Gardener. Dracula for Gabby. Biology, civics

8. EAC member questions and Concerns:
    a. Gail staffing – Camille, Sue Staff. Steve – janitor.
        i. How is it best to reach the school? Land line or Camille's cell.
        ii. What is happening with the language program? We currently have no language program as grants have run out.
        iii. Student handbooks for all families, EAC handbooks
        iv. Covid precautions – we have hand sanitizer, cleaners, will check on masks and updated policy. Internet concerns – none at this time.
        v. NYO banner has been lost. Need to decide how big and who to deal with.
        vi. Gail has a concern about student council t shirts. Chenega does not have a Chenega Corp website so people are not aware that we have Chenega school shirts for sale. Camille would like to ask the student council about settling on one logo for Chenega School.
        vii. Joey - NYO training starting earlier? We would not be opposed to 2 or 3 days a week starting soon.

9. Next meeting time and date: October 5th @ 3:45.

10. Adjourn: 5:19

MEMORANDUM #23-21 **DATE: September 14, 2023**
TITLE: VENDOR APPROVALS

SUGGESTED MOTION:

I move that the board approve item 14.a, Memo 23-21 which approves the new list of homeschool vendors to provide curriculum and services to the Chugach School District.

BACKGROUND:

It is a board responsibility to approve the curriculum for the district including that used by our homeschool families. We have done this by approving the vendors who provide specific curriculum. These vendors have been vetted, approved by and recommended by our homeschool teachers to provide services and materials to our students and families. Our teachers will continue to monitor specific curriculum being used by our students and if it qualifies for reimbursement from the district-funded allotments.

SUPERINTENDENT RECOMMENDATION:

It is the recommendation of the superintendent to approve the list of new vendors.

SCHOOL BOARD VOTE:

Memorandum 23-21 passed/didn't pass by the Chugach School Board this 14th day of September, 2023.

Board Member	Approve/ Yea	Reject/ Nea	Abstain	Not Present
Charlene Arneson				
Deserae Stellwag				
Wayne Shen				
David Totemoff				
Gail Evanoff				

Attested By: _____ Date 9/14/23
Serena Jackson

Title: Chugach School Board Secretary

FOCUS Homeschool Vendor Overview October 2023

VENDOR NAME	TYPE PRODUCT	STANDARD MET	SOP CRITERIA MET
Aurora's Cakery and Bakery Wasilla, AK 99623	In-person classes	MA, RE, CD, SC, CC	All criteria met
Vaughn T Ewig Fairbanks, AK 99701	Online classes, in-person classes	SS, STEM	All criteria met
Hannah Marjorie Wagar North Pole, AK 99705	In-person lessons	CC	All criteria met
First Frets Lexington, KY 40515	Online curriculum materials, subscriptions, on-line supplemental materials	CC, PSS	All criteria met
Tiny Nest Studio Eagle River, AK 99577	Physical curriculum materials, digital-online curr. materials, physical supplemental materials	SC, RE, CC, SS, PSS	All criteria met
Amber Bohart Fairbanks, AK 99701	In-person Math lessons	MA	All criteria met
Bricks Kids & Gears Wasilla, AK 99654	In-person classes, physical supplemental materials, online supp. mat.	MA, SC, TE, RE, PSS	All criteria met
Lit League Lake Forest, IL	Physical curr. mat., subscriptions	RE	All criteria met
The Writing Initiative Eagle River, AK	Digital/Online curr. materials	WR	All criteria met
Write from the Heart Indiana, PA	Physical Curric., Digital/online curric., supp. Materials,	RE, WR	All criteria met
Money Munchkids Reseda, CA	Phys. curr. materials, Digital/online curr. mat.	MA, RE, PSS, CD	All criteria met
Beakers & Bricks, LLC Asheboro, NC	Phy. curr. mat., digital/online curr. mat. Subscriptions	SC, PE	
Chem Explained. Com Fergus Falls, MN	Digital online curr., subscriptions	SC	All criteria met
Classical Historian San Clemente, CA	Phy. curr. mat., digital/online curr. mat., physical supp. mat.	RE, CC, SS	All criteria met
Bear Paw Archery	In-person classes	PE	All criteria met

Roundabout Books, LLC Anchorage, AK 99518	Curriculum materials, supplemental materials, subscriptions	SC, MA, TE, SS, RE, WR, CC, PSS, CD	All criteria met
Rachael Ivy Eielson AFB, AK	In-person piano lessons	CC	All criteria met
Christopher Wiles Valdez, AK	In-person music lessons	CC	All criteria met
Brush & Glaze Learning Studio Wasilla, AK	In-person classes	CC	All criteria met
Petr's Violin Shop, INC Anchorage, AK	Curriculum materials, supplemental mat., other	CC	All criteria met
Sarah Cochran Valdez, AK	Curriculum materials, In-person classes art & music	CC	All criteria met
Mat-Su Children's Choir/Building a Musical Home Eagle River, AK	In-person classes & activities	CC	All criteria met
Imagine Learning LLC Scottsdale, AZ	Curriculum materials, online classes, supplemental materials	TE, MA, RE, WR, CC, CD, SC	All criteria met
Anchorage Music & Dance Ctr Anchorage and Wasilla, AK	In-person lessons	CC, PE	All criteria met
Sewing Together Sewing Studio Wasilla, AK	In-Person lessons	RE, CC, CD, PSS, TE	All criteria met
Alaska Trappers Assoc. Fairbanks, AK	In-person lessons, curr. mat., supp. curr., subscriptions, other	SC, CC, PSS, CD, PE	All criteria met
Heart & Souls CPR (AHA) Fairbanks, AK	In-person lessons	SC, PE	All criteria met
Greatland Youth Chorus Jessica Swan Anchorage, AK	In-person lessons	CC, PSS	All criteria met
Raven City Studio Fairbanks, AK	In-person lessons	CC, SS	All criteria met
Middle School Learning Services Wasilla, AK	In-person lessons	MA, RE, WR	All criteria met
Screaming Eagle Archery of AK Wasilla, AK	In-person classes or activities	CC	All criteria met
The Diane Craft "Right Brain" Learning System Castle Rock, CO	Curriculum materials, online materials, supplemental materials	MA, RE, WR, Health	All criteria met

FOCUS Homeschool Vendor Overview October 2023

Carrick Family Farms, Baked Goods and More Fairbanks, AK	In-person baking classes	SC, PSS, CD	All criteria met
Motion Music & Arts Anchorage, AK	In-person classes	CC	All criteria met
Ramirez, Stephen Fairbanks, AK	In-person classes	MA, SC, Tech	All criteria met
Our Little Farm Palmer, AK	Curriculum materials, In-person classes	PSS, CD, PE, SC	All criteria met
MYTEK LAB Minneola, FL	Digital/Online Curriculum, Tech	MA, SC, Tech	All criteria met
Annie's Bookshelf – Paper Pie Fairbanks, AK	Phys. Curriculum, subscriptions	RE	All criteria met



CHUGACH SCHOOL DISTRICT GENERAL FUNDS 9/27/23

Current Year-To-Date Budget & Expenditures

From July 1, 2023 - September 27, 2023

Fund #	Description		Revised Budget	Year-To-Date	% Spent
100-100	Instruction	Teachers Salaries, Travel, Supplies	$ 3,132,812.00	$ 402,509.82	12.85%
100-200	SPED Instruction	Special Ed. Teacher & Travel	$ 196,484.00	$ 8,205.21	4.18%
100-220	SPED Support	Pyschological & Speech Therapist + Travel	$ 333,038.00	$ 63,007.10	18.92%
100-350	Support Services-Instruction	Staff Salaries, Travel, Supplies (copiers/phones, internet)	$ 1,527,224.00	$ 70,724.48	4.63%
100-400	School Adminstration	School Adminstration Salary + Benefits	$ 123,871.00	$ 43,945.16	35.48%
100-510	District Administration	District Administration Salary, Benefits, Travel, Utilities	$ 198,835.00	$ 53,337.59	26.83%
100-511	Board Of Education	Board Travel, Stipends & Dues	$ 77,000.00	$ 1,871.99	2.43%
100-550	District Administration Suppc	District Administration Salary, Benefits, Insurance	$ 265,053.00	$ 177,536.98	66.98%
100-600	Operations & Maintenance	Classified Salary, Benefits, Travel, Energy, Insurance	$ 531,935.00	$ 105,198.37	19.78%
100-600	Other Financing Issues	Interfund Transfers (Breakfast)	$ 55,275.00	$ 1,020.78	1.85%
100-780	Other Expenses	Scholarship	$ 5,000.00	$ -	0.00%
		TOTAL	**$ 6,446,527.00**	**$ 926,336.70**	**14.37%**
390-540	VTE Residential Stipend	State Stipend as $1,200/per student for 9 months	$ -	$ 60,255.02	#DIV/0!

Interested earned in Savings thru August 31, 2023 = $66,351.28

COALITION FOR EDUCATION EQUITY OF ALASKA

August 4, 2023

Dear Coalition for Education Equity member:

The past few years have been challenging – for our teachers, for our kids, for all of us. And yet, to witness so many of our colleagues, partners, community members, and students standing up and testifying for the needs of our public education system during the last legislative session was truly inspiring. We all know how critical a successful, quality public education system is to the State of Alaska. We know our state must do better for our schools, teachers, staff, and kids. We know how hard we are all working. So, yes, the outcome of the legislative session was truly disheartening. And it means that the work of our coalition is more important than ever.

Your 2023-2024 Coalition for Education Equity membership renewal invoice is attached.

In the face of repeated, consistent failure to adequately fund public education in Alaska, it is clear that strong action is required. We believe there is a strong case to be made that the state is not meeting its constitutional mandate to accord to Alaska children a meaningful opportunity to be educated. We are actively building our strategy to make this case to the public, to our elected officials, and if necessary, to the courts.

To do this will require all our voices. It will take time, the investment of resources, and active participation of our membership. Your engagement in our work will be critical. Your seat at the table matters.

It can often feel like we are banging our heads against the wall, sliding backwards, shouting out into the abyss. But we know from experience that our efforts do make a difference, even when it doesn't happen as quickly as we know it needs to. *For example:*

- After three years, CEE's efforts and threats of legal action resulted in the FY23 reinstatement of previously vetoed funding for school bond debt reimbursement and the REAA/Small Schools Construction ($220.9 million and $83.96 million respectively).
- After ten years of consistent, unwavering advocacy, CEE's efforts protected and expanded funding for quality pre-elementary programs, changed the conversation, and we are now on track to implement statewide voluntary pre-elementary programs over the next five years.
- Over the past five years, we have worked in concert with other advocates for increased education funding. When one-time funding was threatened and withheld in FY19 and FY20, CEE stood strong and fought to ensure it was disbursed to our school districts.

Yes, there is much to do. In the meantime, we've been getting prepared. We're launching a new logo, brand, and social media strategy as a first step in widening our reach, increasing membership, and raising investment in our work. And as we say goodbye to long-time executive director Sarah Sledge, we are preparing to bring on a new director who is passionate and ready for the task of guiding our important work. We look forward to introducing you soon!

For now, please take a moment to process your membership renewal and send it in. Your prompt payment will ensure that we can continue our work.

As always, thank you for everything you do for our kids.

Sincerely,



Jamie Burgess
President
Coalition for Education Equity

Coalition for Education Equity

PO Box 90791
Anchorage, AK 99509

Invoice

Date	Invoice #
8/04/2023	Chugach24

Bill To
Chugach School District Attn: Ty Mase / Debbie Treece 9312 Vanguard Drive, Suite 100 Anchorage, AK 99507

www.ceequity.org

E-mail director@ceequity.org

Please make checks payable to Coalition for Education Equity

P.O. No.	Terms
	Due upon receipt

Quantity	Description	Rate	Amount
	Membership Renewal 23/24 Annual Memberships run July 1 - June 30	4,000.00	4,000.00
		Total	$ 4,000.00
		Payments/Credits	$0.00
		Balance Due	$ 4,000.00

AASB 2023 Resolution Process & Timeline

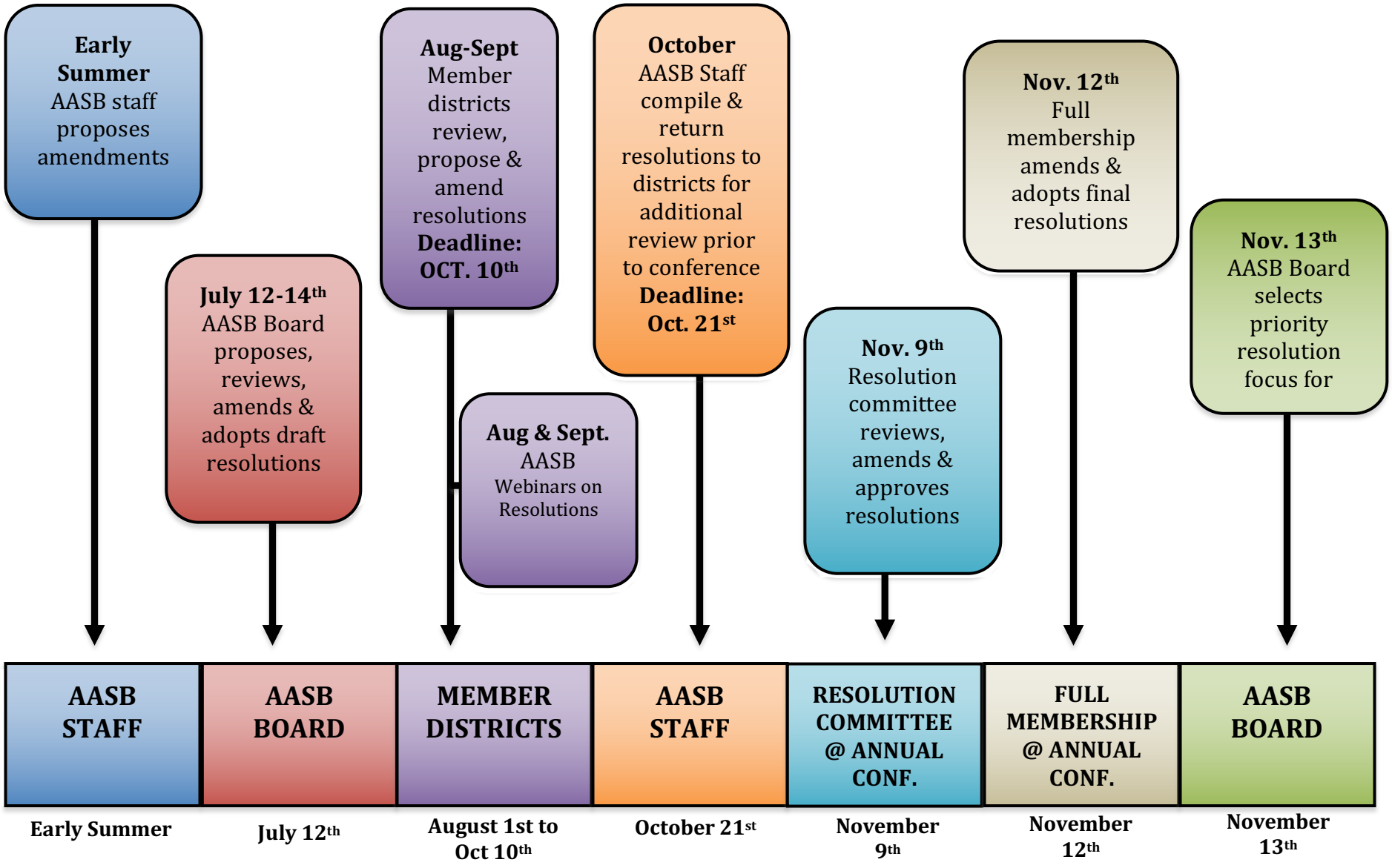

NOTE: New or amended resolutions must be received by AASB thirty **(30)** days prior to the November Resolutions Committee meeting. (Submitted digitally only) Resolutions to be returned to districts via email or on the AASB website no later than twenty **(20)** days prior to the first business meeting of the annual conference.

AASB 2023 Resolution Process & Timeline

Who	When	What
AASB Staff	Early Summer	Staff proposes amendments and sunsetting recommendations
Board of Directors	July 12-14, 2023	Review amendments, adopt draft resolutions
Member districts	August 1 to Oct 10, 2023	Review, propose & amend resolutions. Return to AASB by Oct. 10th
AASB Staff	October 21, 2023	Compile amendments. Return to districts by Oct. 21st
Resolution Committee	November 9, 2023	Review, amend & approve resolutions
Resolutions Committee Report	November 10, 2023	Submission to the first AASB business meeting
Resolutions from the floor	November 10, 2023 by 6:00 PM	Resolutions to be introduced from the floor at the Delegate Assembly
Full Membership	November 12, 2023	Resolutions amended & adopted
Board of Directors	November 13, 2023	Select priority resolution focus for 2024



association of
ALASKA
school boards

Where We Stand 2024

Working Draft #2

The resolutions and belief statements of the Association of Alaska School Boards

Based on the actions of the AASB Delegate Assembly

November 6, 2022

[Note: Sunsetting resolutions are highlighted in yellow]

-Table of Contents-

BELIEF STATEMENTS BY SUBJECT AREA

GOVERNANCE *PAGE 8*
B.1 Local Governance
B.2 Binding Arbitration
B.3 Advisory Board Training
B.4 School Board Member Training
B.5 Class Size
B.6 Pledge of Allegiance

FUNDING *PAGE 9*
B.7 Educational Programs and Funding as Top Priority
B.8 Unfunded Mandates
B.9 Meeting School Facility Needs for Alaska Students
B.10 Funding for Early Learning Programs in Alaska

CHILD ADVOCACY *PAGE 10*
Preamble
B.11 Child Advocacy Mission Statement
B.12 Language, Cultural and Ethnic Diversity
B.13 Increase in Family and Parental Involvement in Schools & Educational Programs
B.14 Supporting Sobriety
B.15 Prevention/Early Intervention
B.16 Prohibiting Persons Convicted of Sexual Abuse from Serving on School Boards
B.17 Declaring Children Alaska's Top Priority
B.18 Equity in Education

PERSONNEL *PAGE 12*
B.19 Alaska Native Teacher Hire & Retention
B.20 Quality Staff Improves Student Learning

EDUCATION PROGRAMS *PAGE 12*
B.21 Early Childhood Education
B.22 Educational Improvement
B.23 Civic Responsibility

GOVERNANCE *PAGE 14*
1.1 Opposing Mandated School Consolidation
1.2 Opposition to Mandated Borough Formation
1.3 Maintaining Local Control in Charter School Formation
1.4 Oppose School Vouchers

1.5 Centralized Treasury: Distribution of Allocated Funds for Schools and Interest Earned
1.6 School Improvement & Student Achievement
1.7 Accountability and Advocacy for Students Outside the School System
1.8 Compulsory Attendance Law
1.9 **DISCONTINUED** ~~Accountability for Student Attendance~~
1.10 **DISCONTINUED** ~~Urging NSBA To Create A Designated Seat For A Member Of National American Indian/Alaska Native Council of School Board Members.~~
1.11 Recognition of Chronic Absenteeism and Truancy in The Role of Education
1.12 Supporting Local Control for Determining School Board Term Limits and Sectional Representation
1.13 Land Acknowledgement
1.14 **DISCONTINUED** ~~Cultural Regalia for School Ceremonies~~
1.15 Opposing the REAA Reapportionment and Recasting of Seats for REAA's impacted
1.16 Voter Participation

FUNDING *PAGE 26*

2.1 Sustained, Reliable and Adequate Educational Funding for Alaska's Students Through a Nonvolatile Funding Source
2.2 Urging Adequate, Equitable and Predictable Funding
2.3 Secure Rural Schools
2.4 Encouraging the Legislature to Fund A Grant Program for School Improvement Strategies
2.5 AASB Advocacy on Individuals with Disabilities in Education Act
2.6 **MOVED TO BELIEFS** ~~Funding Standards-Based Early Learning Programs in Alaska~~
2.7 Funding for Intensive Needs Pre-School and Other Intensive Needs Students Enrolling Post-Count Date
2.8 Following the Capital Improvement Project Priority List for Non-Bonded Projects
2.9 Local Contribution in the School Funding Formula
2.10 Education Endowment
2.11 Instructional Technology
2.12 School Construction Debt Retirement for Bonded Indebtedness
2.13 Revenue Sharing
2.14 Pupil Transportation
2.15 Funding for School District-Operated Regional Boarding Home Programs
2.16 Funding for Transient Students in Schools
2.17 Insurance Costs
2.18 Statutory Grounds for Reduction in Force

2.19 Legislative Financial Relief for Ongoing TRS And PERS Employer Rate Increases
2.20 Energy Cost Relief
2.21 Reliable & Efficient Service by the Alaska Marine Highway System
2.22 Supporting Bypass Mail in Alaska
2.23 Funding for Schools By Establishing The Base Student Allocation In Advance
2.24 Reconstitution and Active Management of the Public School Land Trust and Permanent Fund
2.25 Supporting Excellence in Science, Technology, Engineering and Math Instruction
2.26 Urging revisions to the Step-Down Hold Harmless Clause for Reductions in ADM
2.27 **DISCONTINUED** ~~Supporting a Reduction in the ADM Threshold for K-6 and 7-12 Schools~~
2.28 Urging the State to take an Inventory of Excess Facility Space in Districts
2.29 Urging the State to Conduct and Fund Facility Condition Surveys (et al)
2.30 Urging State Travel Assistance for State-Level Competitions
2.31 Urging the Continuation of Funding for Career and Technical (Vocational) Education
2.32 Supporting State Funding for School Meals
2.33 Supporting Partial Funding for Schools with Seven to Nine Students
2.34 Focus on Grade-level Proficiency for K-3rd Grade Students
2.35 **DISCONTINUED** ~~Addressing the Need for Remediation~~
2.36 Comprehensive Statewide Energy Plan
2.37 District Cost Factor
2.38 Urging the State of Alaska To Fund Alternative Modes of Transportation for All Districts
2.39 Urging A Transparent Process with Stakeholder Input and Prioritization of Equity Concerns in State Studies
2.40 Supporting Use of Federal Impact Aid by Qualified REAAs
2.41 Funding for Internet Services
2.42 Funding for Students who Return for Diplomas
2.43 **DISCONTINUED** ~~Cost of Implementing Alaska Standards~~
2.44 Urging Retention of 10-student Minimum for Funding
2.45 Urging the Legislature to Address Inequities in School Funding
2.46 Resources to Implement the Alaska Safe Children's Act
2.47 Local Control of School Funding
2.48 Increasing the Fund Balance Cap for School Districts
2.49 **DISCONTINUED** ~~Requesting Evaluation of Single Payer Healthcare Plan for Alaska~~
2.50 Inflation-proofed Base Student Allocation (BSA) Investments
2.51 Fully Funding the REAA Rural Construction Fund and Bond Debt Reimbursement

2.52 Support the University of Alaska System
2.53 Urging the State to Fund As 14.14.115, *THE COOPERATIVE ARRANGEMENT GRANT PROGRAM* to Empower Districts to Find Greater Efficiencies
2.54 **DISCONTINUED** ~~Use of FY20 Student Adjusted Average Daily Membership Data to Hold District's Harmless in Loss Of Student Enrollment Related To Covid-19 During The FY21 and FY 22 School Year~~
2.55 Requesting Dedicated Funding for School Health Professionals Outside the Foundation Funding Formula
2.56 Support for Funding of COVID-19 Related Expenses for Education
2.57 **DISCONTINUED** ~~Addressing Equity Issues with Internet Access and Connectivity~~
2.58 Teacher Education Loan Expansion
2.59 **DISCONTINUED** ~~School Funding During the COVID-19 Pandemic~~
2.60 Power Cost Equalization
2.61 Funding for Skill Proficiency and Credit Recovery Related to COVID Disruptions
2.62 Support for the Adoption of Legislation for State-Funded Voluntary Early Childhood (Pre-K) Education in Public School Districts
2.63 Funding for Education and Transportation
2.64 Base Student Allocation Increase: Making Up for Lost Ground Due to Inflation

CHILD ADVOCACY *PAGE 86*

3.1 Declaring Children the Top Priority of Alaska
3.2 Promoting Student Success Through Social and Emotional Learning and Positive Youth Development and Support
3.3 Fetal Alcohol and Drug Exposed Students
3.4 **DISCONTINUED** ~~Preventing Access to Pornography on the Internet~~
3.5 Violence in Electronic Media and Entertainment
3.6 Opiates, Inhalants, Alcohol, Tobacco, Methamphetamine & Other Drug Abuse
3.7 Cooperation Among Service Providers Serving Children
3.8 Suicide Prevention, Education and Treatment Efforts
3.9 Safe, Caring and Connected Schools
3.10 Support of State Funding for Student Health Services in Alaska
3.11 HIV/AIDS and Other STI Education
3.11 HIV/Aids and Other Sexually Transmitted Infection (STI) Education
3.12 Education of Students in Responsible Behaviors Relating to Human Sexuality
3.13 In Support of the Alaska Children's Trust
3.14 Increased Support for Alaska Head Start Programs
3.15 Supporting the Safe and Drug-Free Schools and Communities Act

3.16 Revise Parental Permission Requirements for Questionnaires and Surveys Administered in Public Schools
3.17 Student Wellness
3.18 Promoting Awareness of The Importance of Early Childhood Brain Development
3.19 School Activity Schedules in Relation to Major Religious Holidays
3.20 Interventions and Sanctions that Reduce Loss of Credit
3.21 Supporting Expansion of Health Insurance Coverage to School-Age Children and Their Families
3.22 Student Participation in Interscholastic Activities
3.23 Support of Full State Funding of Public Health Requirements
3.24 **DISCONTINUED** ~~Tobacco Free Schools~~
3.25 Supporting Sex Abuse Awareness and Prevention Education
3.26 Supporting the Adoption of Trauma-Informed and Culturally Relevant Practices to Improve Student Achievement and Reduce Behavioral Deficits for All Alaskan Students
3.27 Support for The Treatment of Abuse of Opiates
3.28 Education on The Dangers of Tobacco, Electronic Nicotine Delivery Systems, Marijuana Use and Secondhand Smoke
3.29 Promoting Student Transportation Safety Programs
3.30 Safe and Inclusive Learning Environments for LGBTQ+ Students

PERSONNEL *PAGE 117*

4.1 Supports for Staff Development
4.2 **DISCONTINUED** ~~National Certification of Teacher~~
4.3 Alaska Statewide Educator Mentoring
4.4 Special Education and Related Services Training
4.5 Addressing the Teacher, Specialist and Administrator Shortage
4.6 Repeal the Social Security Government Pension Offset and Windfall Elimination Provision
4.7 Relating to Defined Benefit Retirement
4.8 Relating to Health Care Costs and Medical Insurance
4.9 **DISCONTINUED** ~~Supporting Use of Licensed Professionals to Facilitate Services by Electronic Means~~
4.10 **DISCONTINUED** ~~Urging the State of Alaska to Continue the Retire-Rehire Program~~
4.11 Alternative Pathways to Certify Effective Teachers
4.12 Teacher Endorsements Change Notification
4.13 Continue to Strengthen Training Requirements for Superintendents and Superintendent/Principals
4.14 **DISCONTINUED** ~~Alternative Pathways to Superintendent Certification~~
4.15 Removing a Roadblock to Hiring Temporary Superintendents
4.16 Supporting Effective**,** Culturally--Integrated Pedagogy in Alaska
4.17 Addressing the Paraprofessional Shortage
4.18 Establishing a New Teacher Incentive Program for Alaska

EDUCATION PROGRAMS *PAGE 132*

5.1 Career-Exploration Programs
5.2 Curriculum Expansion Via Distance Delivery
5.3 Alaska Native Indigenous Language Program Development
5.4 Community School Programs
5.5 **DISCONTINUED** ~~Increasing Student Contact Time~~
5.6 Encouraging Civic Education in School Districts
5.7 Requesting the State to Provide Standards-based Assessments in Alaska Native indigenous languages
5.8 Supporting Regional Career and Technical Education Centers
5.9 Urging flexibility in testing requirements to support indigenous language programs
5.10 Supporting universal access to education for Alaska's 3- and 4-year-old learners
5.11 Encouraging districts to adopt Standards for Parent/Family Involvement Programs
5.12 Urging Continuation of The Alaska Native Education Act
5.13 Relating to Postsecondary Classes for Secondary Students
5.14 **DISCONTINUED** ~~Recognition of the True and Improving High School Graduation Rate~~
5.15 Supporting Assessments to Measure Progress
5.16 Support of Public-School Library Development Grant Program
5.17 Urging the Legislature to Change Alaska State Statute 14.07.030 To Allow for Elementary Age Students Who Have Been Displaced Due to A School Closing to Be Eligible for The State Boarding Home Program.
5.18 **DISCONTINUED** ~~Mandated State Testing~~
5.19 Supporting Authentic Assessments
5.20 Supporting Easier Access to Charter School Programs
5.21 Supporting the Alaska Performance Scholarship Program
5.22 Supporting CTE Credits for the Alaska Performance Scholarship
5.23 Supporting Innovation and Collaboration to Improve Student Achievement for All Alaskan Students
5.24 Recognizing the Valuable Educational Opportunities the Annual Elders & Youth Conference and AFN Convention Provides Students
5.25 Education of Gifted and Talented Students
5.26 Request for An Alaska DEED Graduation Success Program for Students Ages 19-21
5.27 In Support of Arts Education
5.28 Supporting the Preservation and Restoration Of Alaska Native Indigenous Languages
5.29 Urging A Statewide Annual Alaska Indigenous Language Conference
5.30 Requesting A Thorough Analysis of The Statewide Testing and Accountability System
5.31 Alaska Standards for Culturally Responsive Schools

5.32 Alaska History Textbook
5.33 Restoring the Alaska Learning Network (AKLN)
5.34 Support for Proposed ESSA Priorities
5.35 Creating Comprehensive Support for Families and Students to Navigate College and Career Training Opportunities

AASB Mission Statement

The mission of AASB is to advocate for children and youth by assisting school boards in providing quality public education, focused on student achievement, through effective local governance.

Belief Statements

Belief Statements are brief philosophical statements about issues the AASB membership believes to be true. They are distinguished from Resolutions in that they are longstanding, universally accepted statements that require no specific action yet underpin the beliefs of the association.

GOVERNANCE

B.1 LOCAL GOVERNANCE

Public education is the responsibility of the states and of the local school boards created by those states. This system of local school board governance is one of the purest examples of democracy in action today in that school boards, as locally elected representatives, are held accountable for public education by the public they serve as locally elected representatives. The mission of the Association of Alaska School Boards is to advocate for children and youth by assisting school boards in providing students with quality public education, focused on student achievement through effective local governance. *Amended 2003, 2007, 2009*

B.2 BINDING ARBITRATION

Binding arbitration removes decision making from locally elected school boards and puts it in the hands of an outside entity, and allows a third party to determine the salaries, benefits and working conditions of school district employees who bargain collectively. It is the elected school board's responsibility to weigh the consequences of decisions concerning management of school resources. The Association of Alaska School Boards opposes any legislation that provides for binding arbitration as the final step in collective bargaining.

B.3 ADVISORY BOARD TRAINING

State law requires the establishment of advisory school boards in REAA's and allows them in city and borough school districts. Regional School boards have delegated authority and responsibility to those advisory school boards. Regional School Boards are encouraged to provide in-service opportunities and training to local advisory boards to help them become effective contributors to excellence in education in their communities.

B.4 SCHOOL BOARD MEMBER TRAINING

School board members are elected by their local school district citizens based on minimum statewide requirements of eligibility to vote and residency. They are responsible to the public for policy issues and budgets of millions of dollars and are coming under increasing public scrutiny. The Association of Alaska School Boards strongly encourages all school board members to avail themselves of training opportunities to increase their understanding of the issues confronting their district, to improve their ability to make the decisions required of them and to demonstrate their accountability to the public.

B.5 CLASS SIZE

AASB opposes any legislative mandating of class size or making class size a negotiable item of bargaining. The Alaska Supreme Court has held that class size is not a mandatory subject of collective bargaining. While school boards recognize the advantage of small class size, they must be able to use discretion when weighing the cost of reduced class sizes with other financial obligations and educational needs of a district. Making class size a mandatory subject of collective bargaining might make class size subject to grievance binding arbitration or otherwise diminish board control over staffing levels. Legislative mandates similarly infringe on the discretion of local decision-makers. *Amended 2009*

B.6 PLEDGE OF ALLEGIANCE

The Pledge of Allegiance is an important civics lesson, recited every day across the nation by school children. Each school district shall incorporate the Pledge of Allegiance to our nation's flag in a manner that it sees fit as a regular part of the district's activities, in compliance with AS 14.03.130. Every effort should be made to inform students of the true meaning of this pledge to deepen their interest and understanding of citizenship and civic responsibility in a democratic society. Additionally, in accordance with AS 14.03.130 school districts shall inform all affected persons at the school of their right not to participate in the pledge. *Adopted 2013 Amended 2015, 2018*

FUNDING

B.7 EDUCATIONAL PROGRAMS AND FUNDING AS TOP PRIORITY

Article VII, Sec. 1 of The Alaska State Constitution states "The Legislature shall by general law establish and maintain a system of public schools open to all school age children…". Public education is fundamental to democracy and economic advancement of the state and tribes**.** AASB calls upon the Governor and the Alaska Legislature to make early, sustainable, adequate and equitable funding a top priority for the exemplary education of our youth. *Amended 2003, 2005, 2006*, 2008, 2017, 2018

B.8 UNFUNDED MANDATES

Schools have been inundated with statutes, regulations and court decisions that require additional services without accompanying appropriations. With limited and decreasing resources due to significant revenue shortfalls, increasing costs, and expectations for services; unfunded mandates result in an overwhelming financial burden for school districts throughout our state. These mandates are invasive to the educational process, limiting local school boards in their flexibility and autonomy to appropriate funds within

their district, thus negatively impacting their ability to govern local schools. AASB encourages all policy makers to consider the impact of their mandates and to take responsibility by fully funding or repealing them. *Amended 1999, 2015, 2016*

B.9 MEETING SCHOOL FACILITY NEEDS FOR ALASKA STUDENTS

AASB believes that the Alaska State Legislature and the Governor must adequately fund the constitutionally mandated need for educationally appropriate school facilities and major school maintenance. *Amended 1998, 2002, 2006, 2009, 2014, 2015, 2016*

B.10 FUNDING FOR EARLY LEARNING PROGRAMS IN ALASKA

AASB supports legislation to add additional funding for the planning and programming of voluntary early learning and family support programs, including online programs, for all children from birth to school age as an important long-term investment in Alaska's future workforce and citizenry. *Adopted 2020*

CHILD ADVOCACY

Preamble

As community leaders committed to education and the equal opportunity for each child to achieve their potential, we act on behalf of all children for the good of the community; and we act on behalf of each child. We accept our responsibility and its challenge of finding viable and relevant solutions to the myriad of problems facing children today. We believe that while parents bear primary responsibility for the education of their children, it takes a whole community to educate a child. We encourage parents and guardians, the legislature, tribal governments, agencies, municipalities, organizations, businesses, communities, congregations, and extended families to willfully commit to the development of each child. Together we will identify and clearly articulate the needs of our children, and together we will implement effective solutions and achieve measurable results. Together, we will share in the rewards that an emotionally healthy, educated, and vital citizenry will contribute to the future of Alaska. To fulfill our role in the shared responsibility of educating children, we are resolved to pursue the following resolutions. *Amended 2002, 2006, 2007, 2009, 2011, 2012, 2019*

B.11 CHILD ADVOCACY MISSION STATEMENT

The advocacy role of school board members is to promote parental, public and social service commitment to the shared responsibility of educating all children and youth in public education while creating an environment that supports children to thrive and be empowered to choose a path to success in their future. *Amended 1998*, 2019

B.12 LANGUAGE, CULTURAL AND ETHNIC DIVERSITY

Alaska is a vast state and is populated by persons of diverse cultural, ethnic, and linguistic backgrounds. Our schools must promote an environment that respects and reflects the ethnic, linguistic and cultural identity of the student populations. AASB honors and celebrates those languages and cultures indigenous to Alaska, and supports those efforts that integrate indigenous languages and cultural knowledge into the delivery of academic programs. *Amended 1998, 2007, 2011, 2012, 2013, 2015, 2018*

B.13 INCREASE IN FAMILY AND PARENTAL INVOLVEMENT IN SCHOOLS & EDUCATIONAL PROGRAMS

AASB believes, and research supports the belief, that one of the most important factors in student achievement is parental, family and guardian involvement in the educational process, both at home and in the schools. AASB feels that family involvement in the education of children is the highest priority and strongly encourages school districts to be proactive and engage families in a culturally responsive way. *Amended 2003, 2006, 2007, 2008, 2009, 2012*

B.14 SUPPORTING SOBRIETY AND SUBSTANCE USE PREVENTION

AASB acknowledges the multifaceted and generational complexities of Alaska's drug and alcohol history. AASB encourages our Board Members, school staff, students, parents and community members to help in overcoming our communities' affliction with alcohol and drugs. AASB supports efforts of schools and communities to become and remain free of alcohol and drug use through activities that: encourage the formation of sobriety groups in every Alaska community; encourage the practice of healthy lifestyles, values and activities; support existing groups working to promote sobriety; educate students on the consequences of their actions and the science of addiction; and encourage and support sober role models. *Amended 2007, 2010, 2013, 2019*

B.15 PREVENTION/EARLY INTERVENTION

AASB believes in the prevention aspects of health and social service programs. Prevention is cost effective, both in dollars and in reducing human suffering. Many of the social and health problems we are experiencing now will only continue to grow if effective prevention/intervention programs are not in place. AASB supports early identification of and intervention for children at risk and inclusion of parents and guardians and community partners in prevention and intervention services in a culturally relevant way. *Amended 2002, 2006, 2008, 2019*

B.16 PROHIBITING PERSONS CONVICTED OF SEXUAL ABUSE FROM SERVING ON SCHOOL BOARDS

School board members should serve as role models for students and staff. AASB believes that persons convicted of sexual abuse should be legally prohibited from serving on school boards, REAA boards, and advisory school boards. *Amended 1998, 2007, 2008, 2013*

B.17 DECLARING CHILDREN THE TOP PRIORITY OF ALASKA

AASB believes children are the top priority of our state. This declaration extends to the education, health, physical and psychological safety,, mental wellness, and future of our children. *Adopted 2005, Amended 2006, 2008*

B.18 EQUITY IN EDUCATION

All children must have access to an educational program that meets their individual physical, academic, cultural, social and emotional needs. The Association of Alaska School Boards believes that the allocation of educational resources including access to technology and connectivity, must provide equity for every student regardless of their economic status, geographic location or the economies of scale. *Adopted 2016*

PERSONNEL

B.19 ALASKA NATIVE TEACHER HIRE & RETENTION

Studies have shown that Native teachers have had a very positive effect on Native students. The hiring and retention of qualified Alaska Native teachers has long been supported by educational and Native organizations. AASB strongly urges school districts to recruit qualified Native teachers and administrators. Colleges and universities within the state are encouraged to more actively recruit Native students and to develop Indigenous certification programs designed to build on the strengths of indigenous pedagogies. Local school districts, with the help of the Alaska Department of Education and Early Development, are encouraged to provide leadership in developing programs to encourage Native students to choose education as a field of study, and to make every effort to foster the hiring and retention of Native teacher aides and teachers. *Amended 2010, 2011*

B. 20 QUALITY STAFF IMPROVES STUDENT LEARNING

High-quality, highly motivated, culturally responsive and innovative teachers, administrators and other staff are essential for successful student learning. *Amended 2015*

EDUCATION PROGRAMS

B.21 EARLY CHILDHOOD EDUCATION

All children should have rich learning opportunities during the formative early childhood years. The Association of Alaska School Boards therefore supports and encourages districts and/or communities to develop early childhood programs, which include parent and family involvement. AASB supports sustainable, reliable and adequate State funding for early childhood education. *Amended 1998, 2007, 2012, 2015*

B.22 EDUCATIONAL IMPROVEMENT

AASB believes the elements of a quality educational improvement effort should address the following key areas:

- Parent/Guardian Involvement: Should encourage a high degree of caregiver involvement and engagement in all aspects of their child's education; collaboration on societal issues outside schools that impact children's learning (schools and various agencies must collaboratively plan to provide services to children to effectively meet their needs); and accountability to the public to ensure the desired results: a "world class" education.

- Community engagement: Should involve many different sectors of the community in the schools to broaden students' experiences and promote the shared responsibility of adults in our communities to support Alaska's youth to achieve academic success, engage in positive behaviors, and foster the growth of children who are grounded in their cultural identity.

- Student Standards: Should include the development of educational programs using best practices including a variety of delivery methods to meet standards and

identified competencies that meet the diverse educational and cultural needs of students and prepare them to be healthy, resilient, and productive citizens.

- Professional Standards: Should include the highest ethical and professional standards throughout the district.

- Learning Environment: Should include adequate and appropriate indoor / outdoor spaces, class sizes, furnishings, equipment, supplies and technology, and be reflective of the cultures of the community. *Amended 1998, 2010, 2011, 2015, 2016*

B.23 CIVIC RESPONSIBILITY

The strength of our democracy rests in large part on the success of our public schools in educating all students. It also rests on students' deep understanding of accurate, representative histories from the local to the global level. This understanding includes a working knowledge of evolving governmental principles and structure, the importance of citizenship, and civic responsibility. These lessons should begin in preschool and spiral throughout the school years, including meaningful student government opportunities. Lessons should provide strong grounding for fully informed and involved citizenship. It is the duty of each generation to teach the next how democracy works. *Adopted 2008, Amended 2010, 2012, 2016*

GOVERNANCE

1.1 OPPOSING MANDATED SCHOOL DISTRICT OR LOCAL SCHOOL CONSOLIDATION

AASB is opposed to mandated school district or local school consolidation because it would greatly reduce local control for a significant number of school districts in Alaska.

Rationale. In 2004 the Alaska Local Boundary Commission (LBC) and Department of Education & Early Development (EED) completed a report, which suggests only marginal savings by consolidation of school districts. AASB continues to seek and engage in cooperative and shared service opportunities, thereby creating a significant savings of state tax dollars for all involved.

The concept of cooperation and shared services, as an alternative to mandated consolidation, ensures local autonomy and decision-making is preserved. AS.14.14.115 provides a grant program that encourages the sharing of services to recognize cost economies. Some communities and school districts have considered it viable to consolidate, and have done so through their own volition as a local decision. Others currently participate in shared administrative services, including purchasing and other business functions, and should be applauded and encouraged in their efforts to achieve efficiencies.

No evidence has been provided to support the proposition that significant savings or improved student learning would result from the indiscriminate combining of school districts or schools. Studies on school consolidation imply an imperceptible savings. Public perception may be different. School boards are encouraged to involve the public more thoroughly in efforts to explain their budget and to seek input throughout the budgeting process.

Adopted 1997, 2017
Amended 1999 & 2003, 2015, 2017
Renewed 2022
(Sunset 2027)

1.2 OPPOSITION TO MANDATED BOROUGH FORMATION

AASB continues to oppose mandatory formation of boroughs. A mandatory borough act reduces the current level of local responsibility and control by encouraging the elimination of small REAA districts and small city districts, creating an extra level of government with the associated costs.

Rationale. Local communities may differ in their values and the priorities associated with the delivery of educational services.

A mandatory borough act ignores the economic reality of the lack of an adequate tax base in some rural areas of the State. If the state wishes to require local communities to contribute financially, the legislature already has the statutory authority to implement a tax in the unorganized borough. Creating an additional level of local government may not produce the desired effect.

Adopted 1998
Amended 2001, 2003, 2016
(Sunset 2023)

1.3 MAINTAINING LOCAL CONTROL IN CHARTER SCHOOL FORMATION

AASB recognizes charter schools as a locally developed alternative to the standard education program. AASB urges the Department of Education & Early Development to work in partnership with local school districts in the formation of new charter schools. AASB supports charter schools as long as the local school board:

a) Retains the sole authority to initiate the approval or rejection of the charter,

b) Retains options to terminate the charter of any school that fails to meet criteria set forth in the charter or as otherwise specified by the local school board

c) Maintains authority to require and enforce accountability, including determining the criteria, standards, or outcomes that will be used in establishing the charter;

d) Ensures that a charter does not foster racial, social, religious or economic segregation or segregation of children with disabilities.

Rationale. Section 14.12.020 in Title 14 of the Alaska Education Laws states that a school district shall be operated under the management and control of a school board. HB 278, adopted in 2014, interjected the Department of Education & Early Development as an authorizing agency of charter schools whose formation was rejected at the local level.

Adopted 1997, 2017
Amended 1998, 1999, 2003, 2011, 2014, 2017
Renewed 2022
(Sunset 2027)

1.4 OPPOSE SCHOOL VOUCHERS

AASB is opposed to using public funds to finance private schools, parochial schools, or private home school/correspondence programs, whether through vouchers, tax credits, or individual K-12 savings accounts, or any other funding that would divert funds from public education.

Rationale. Public schools educate every child, regardless of race, ability, religion, economic circumstance, or special needs. Public schools, through their elected school boards, are directly accountable to the citizens of the community for the expenditure of public funds. Taxpayer-funded vouchers for private, parochial, or home school tuition and fees drain scarce resources from public classrooms and diminish revenues available for public schools. Vouchers may raise local taxes if state appropriation is insufficient.

The U.S. Supreme Court ruled in June 2002 that a voucher program in Ohio did not violate the U.S. Constitution. Referenda in other states have turned down vouchers. The Alaska Supreme Court has held that the following provision of the Alaska Constitution, a restriction independent of the U.S. Constitution, bars disbursement of public funds for the purchase of private or parochial education:

"The legislature shall by general law establish and maintain a system of public schools open to all children of the State, and may provide for other public educational institutions. Schools and institutions so established shall be free from sectarian control. No money shall be paid from public funds for the direct benefit of any religious or other private educational institution."

(Alaska Constitution, Section 1. Public Education.)

In addition, voucher funding tied to students could not fully ensure students or taxpayers the benefits of accountability measures, like state mandated content and student performance standards, and could not satisfy other state and federal mandates under which public schools are required to operate, without invading the religious and other constitutional freedoms of private and parochial schools.

Adopted 2012, 2017
Amended 2013, 2014, 2015, 2017
Renewed 2022
(Sunset 2027)

1.5 CENTRALIZED TREASURY: DISTRIBUTION OF ALLOCATED FUNDS FOR SCHOOLS AND INTEREST EARNED

AASB urges the Legislature and local governing bodies to assure that all designated funds directed to school districts, including interest earning related thereto, must go to school districts without penalty, and that all interest on school district funds must accrue to the school district.

Rationale. Educational funds appropriated by State and local governments are appropriated for the purpose of public education. The efforts of local school districts should be to provide sound planning for future educational needs. Certain municipalities under centralized treasuries have retained state funds allocated to school districts. Some municipalities retain fund balances on school budget monies, and interest accrued on school funds are sometimes held by the municipalities. As it is unclear how interest on school funds are to be distributed, this action will make certain all moneys allocated and earned for schools are used to benefit children. Currently, with a municipal centralized treasury it is possible for school money to be used for things other than education. “Use it or lose it” is a disincentive to utilize educational funds in the most efficient and effective manner.

Adopted 1998.
Amended 2002, 2004, 2008
Renewed 2018
(Sunset 2023)

1.6 SCHOOL IMPROVEMENT AND STUDENT ACHIEVEMENT

AASB supports the goals of the Every Student Succeeds Act and implementation of the state plan approved on May 16, 2018, in particular AASB supports the emphasis on reaffirming local school board authority over public education and limiting federal and state overreach. AASB urges Congress to fully fund the law and the state legislature to provide sufficient funds to implement and support the plan.

Rationale. State plans must have a statewide accountability system and support and improvement strategies. While the measure of Adequate Yearly Progress in the former law is no longer in effect, accountability systems within each state must cover all students and subgroups of students and include measures of interim academic progress. The accountability system should retain as much local control as possible.
Adopted 2006
Amended 2008, 2010, 2011, 2013, 2015, 2016, 2018
(Sunset 2023)

1.7 ACCOUNTABILITY AND ADVOCACY FOR STUDENTS OUTSIDE THE PUBLIC SCHOOL SYSTEM

AASB urges the Legislature to give State Department of Education and Early Development the authority and funding to register and track the achievement and academic growth of all school-age children throughout the state who are not enrolled in public schools or private schools that perform assessment substantially equivalent to that performed by the state. Parents of such students should be required to provide information regarding instruction of and progress of their children, to provide accountability that essential skills are being taught and learned. Public schools students are already accountable through statewide assessments.

Rationale. The goal is to ensure every child receives a quality education. Children receiving an education outside the public school system at home are not required to register or be accountable throughout their education. The State of Alaska has no compulsory law requiring some form of educational plan be filed with the state. Whether by not enrolling or by leaving the school systems of the state, no "safety nets" for students are in place to assure that all students are receiving the benefit and right of an education. No independent or objective testing is required for these students.

Though home schooling can be very effective for some, public schools often receive students who have fallen behind due to failed home schooling or the lack of schooling. Entry of these students into public education puts the receiving districts in a position of providing substantial remedial assistance, while subjecting the students to the same testing and evaluation standards as other students.

Adopted 2000,
Amended 2001, 2003, 2006, 2008, 2010, 2014, 2015, 2016
(Sunset 2025)

1.8 COMPULSORY ATTENDANCE AGE

Current state law requires compulsory school attendance from age 7-16. AASB supports changing the mandatory age for school attendance to be age 6 through 18 unless a student has graduated high school earlier or is enrolled in a GED or alternative program.

Rationale. State and local performance standards set high expectations in mathematics, reading and writing for children age 5 through 7. Furthermore, research indicates that earlier education is beneficial. In fact, most children in Alaska are enrolled by the age of 6.

Most 7-year-old kids are in first or second grade. With the renewed emphasis on reading, writing, and mathematics skills in the first few years, skills on which the child will be assessed, children starting school late are at a big disadvantage.

Mandatory attendance laws must be enforced, but the best way to keep students in school is to fund and provide education programs that engage students.

Adopted 2001
Amended 2002, 2003, 2004, 2005, 2006, 2009, 2014, 2016, 2022
Renewed 2021
(Sunset 2026)

1.11 RECOGNITION OF CHRONIC ABSENTEEISM AND TRUANCY IN THE ROLE OF EDUCATION

AASB urges the Alaska Legislature, and the Department of Education and Early Development to support districts in meeting the state's compulsory attendance laws. AASB supports the creation of comprehensive family/guardian education in regard to truancy and the enforcement of truancy laws.

Rationale: It is no longer enough simply to count how many students show up on average for school every day or to concentrate on truancy (unexcused absences). State policy and action can ensure that districts and schools use chronic absence data to trigger a timely response and collaborate with families and community partners to prevent children from missing so much school that they fall behind in their education. Where truancy only addresses unexcused absences, chronic absenteeism, by definition, flags any students who are missing more than 10% of school for any reason. A school district can have an average attendance rate of 90% with up to 30% of their students being chronically absent. When it comes to lost instructional time, an absence is an absence.

AS 14.30.030. *Prevention and Reduction of Truancy*. The governing body of a school district, including a regional educational attendance area (REAA), shall establish procedures to prevent and reduce truancy.

Adopted 2017
Renewed 2022
(*Sunset 2027)*

1.12 SUPPORTING LOCAL CONTROL FOR DETERMINING SCHOOL BOARD TERM LIMITS AND SECTIONAL REPRESENTATION

AASB supports the fundamental right of local control in determining the maximum length of service a school board member may serve (i.e., term limit). AASB supports and believes in the principle of local, self-determination in regard to length of service and school board member sectional representation within the boundaries of any school district.

Rationale: While the basic structure for school boards is well defined in Alaska statute (AS 14.08.041 and AS 14.12.030) the number of terms an elected school board member may serve is not prescribed by state law. In addition, Alaska statute defers decisions for sectional representation by school board members to local voters within either a Regional Education Attendance Area (REAA)(AS 14.08.051), borough, or city school district. The basic tenet of local, democratically elected control of governance for school districts has long been championed and advocated for by the Association of Alaska School Boards (AASB). Thus, AASB will continue to protect such principles and practices and resist any efforts to create statewide mandates that supersede local control.

Adopted 2019
(*Sunset 2024)*

1.13 LAND ACKNOWLEDGEMENT

"A Land Acknowledgement is a formal statement recognizing the Indigenous people of a place. It is a public gesture of appreciation for the past and present Indigenous stewardship of the lands that we now occupy. Land Acknowledgement opens a space with gratefulness and respect for the contributions, innovations, and contemporary perspective of Indigenous peoples. It is an actionable statement that marks our collective movement towards decolonization and equity." Anchorage Museum

AASB honors and respect the Ancestral Lands on which all Alaskans live, work, play, and learn and encourage activities and practices that acknowledge and recognize the past and present stewardship of these lands.

AASB supports the following:
1. Having a Land Acknowledgement spoken, for all to hear, on a regular basis, including but not limited to its official meetings, conferences, celebrations, and gatherings.
2. Working with local Tribes to identify appropriate wording for a Land Acknowledgement.
3. Encouraging member School Boards to add a Land Acknowledgement before official meetings, conferences, celebrations, and gatherings.

Rationale:
A. Almost 20% of Alaska's population identifies as American Indian or Alaska Native, by far the highest of any state.
B. A Land Acknowledgment opens a space with gratefulness and respect for the contributions, innovations, and contemporary perspective of Indigenous peoples. It is an actionable statement that marks our collective movement towards decolonization and equity.
C. Alaska Native Tribes and their descendants have lived and subsisted on Alaska's lands and waters for thousands of years.
D. These lands and waters have been cared for through traditions passed from generation to generation.

Adopted 2021
(*Sunset 2026)*

1.15 Opposing the REAA Reapportionment and Recasting of Seats for REAA's Impacted

AASB urges the division of elections, division of community and regional affairs, and the Alaska Department of Education and Early Development to consult with AASB and REAAs before the final reapportioning and recasting of school board member representation occurs.

Rational:
When school districts have invested time, effort, and money to send board members to professional development trainings, that investment is immediately lost if the affected board members can't finish their current terms before the reapportionment becoming effective.

The reapportionment will eliminate some board members that have just been re-elected to their respective seats that results in our current board members running against each other. It will also force some to have to run consecutive years just to stay on

Adopted 2022
(Sunset 2027)

FUNDING

2.1 SUSTAINED, RELIABLE AND ADEQUATE STATE FISCAL PLAN AND EDUCATIONAL FUNDING FOR ALASKA'S STUDENTS THROUGH A NON-VOLATILE FUNDING SOURCE

The sustainability, reliability and adequacy of Alaska's funding for public education are of highest concern to the Association of Alaska School Boards. AASB urges the Legislature to develop a state fiscal plan. This fiscal plan would provide a long-term approach to funding the costs of public education and other services upon which Alaska's students and their families depend. The plan should be strategic, sustainable and realistic, providing a framework for balancing budgets while adequately funding public education.

Rationale. The State of Alaska provides a wide range of services to a diverse population spread over a logistically complex area. A long-term plan that ensures reliability of funding for education and other state services that impact the delivery of education, regardless of variation in volatile resource markets, is needed to provide a stable business climate and to ensure the citizens of necessary services.

Adopted 2002
Amended 2004, 2015
Renewed 2017, 2022
(Sunset 2027)

2.2 URGING EARLY, ADEQUATE, EQUITABLE, AND PREDICTABLE FUNDING OF PUBLIC EDUCATION

AASB urges the State of Alaska to provide early, adequate, equitable, and predictable funding of public education. AASB believes that adequate funding should include the following:

- State funding of the TRS-PERS retirement liability;
- An increase to the Base Student Allocation to inflation proof pre-K through 12th grade education funding by no less than the amount of $860 for the 2023-2024 fiscal year.
- Increase funding to account for flat funding in past years.
- Recognition of the need to keep pupil-teacher ratios to a level in line with research-based best practices;
- Funded career and technical education.
- An early adoption timeline that allows school boards and district administration to effectively plan instruction and staffing for the upcoming school year.
- Programs and Initiatives focusing on Alaska Native languages and cultures.

AASB urges that in the years when the Alaska Legislature has not approved an education budget by April 1, the budget from the previous year shall be the legal minimum funding for the next fiscal year.

AASB urges the Legislature to review and recommend appropriate adjustments to AS.14.17.460, District Cost Factors, to ensure equity in school funding.

AASB urges the Legislature to provide stable forward funding that addresses inflation, including the use of an education endowment, to ensure funding predictability.

Adopted 2014
Amended 2017, 2022
Renewed 2019
(Sunset 2024)

2.3 SECURE RURAL SCHOOLS

AASB urges permanent reauthorization of the Secure Rural Schools and Community Self Determination Act (SRSCA) by the U.S. Congress as a key component of federal financial assistance to local governments and school districts in Alaska. This law recognizes the need for sustained funding to school districts that have non-taxable national forest lands within their boundaries.

Rationale. The Secure Rural Schools Act is critically important to 24 of Alaska's 54 school districts (44% of all districts), which have relied heavily on Secure Rural School funds to supplement local funding for education. Without positive action, 24 Alaska school districts and the communities encompassing these districts will lose $18 million in revenue, resulting in significant community and district job loss, education program reductions, and major overall economic upheaval. In at least one single site school district, 25% or more of the district's revenue would be lost.

In 1908 Congress passed a law, which formed a compact with counties, boroughs and parishes in rural America where the National Forests are located. That compact stipulated that the Forest Service would share 25 percent of its revenues with local governments to support roads and schools. The program impacts our school districts and the welfare of our students in more than 600 rural counties as federal payments-in-lieu-of-taxes to jurisdictions with forestlands and reserves.

The uncertainty of whether the program will be continued from year-to-year is impacting local budget allocations for education funding. (In 2000, Congress passed the Secure Rural Schools and Community Self Determination Act to address the negative effects of declining federal receipts on local governments. Since 1908, the federal government has shared a portion of the revenues generated on public forestlands with local governments

It is imperative that this act is permanently reauthorized for the many national forested counties, boroughs and school districts that have little ability to generate local tax revenue to support schools and roads.

Adopted 2011
Amended 2012, 2014
Renewed 2016, 2021
Sunset 2026

2.4 ENCOURAGING THE LEGISLATURE TO FUND A GRANT PROGRAM FOR SCHOOL IMPROVEMENT STRATEGIES

AASB encourages the Alaska Legislature to provide grant funding for improvement of school performance as originally designed in AS 14.03.125, under the mechanism already detailed to support 14.03.125 in Alaska Administrative Code ARTICLE 2 33.200 through 4 AAC 33.290.

Rationale. The grant funding could be targeted on strategies that address low academic student performance, such as grants for early learning and pre-literacy programs, research-based targeted intervention programs, systemic initiatives, teacher retention programs and graduation rate improvement strategies.

A fund for the improvement of school performance, AS 14.03.125, was created by the Legislature in 1990, for grants by the Commissioner of Education & Early Development to school districts. It has never been funded by the Legislature. The settlement of 3AN-04-9756 CI, Kristine Moore et al. V. State of Alaska, established a fund for improving the performance of 40 schools in the state. The Legislature funded that agreement and a grant system for school improvement strategies.

Adopted 2012
Renewed 2017, 2022
(Sunset 2027)

2.5 AASB ADVOCACY ON INDIVIDUALS WITH DISABILITIES IN EDUCATION ACT (IDEA)

Following passage of the Individuals with Disabilities Education Improvement Act of 2004, AASB will monitor and advocate the following:

1. Increase in funding to fully fund the federal mandate.
2. Resolution of differential treatment and discipline for special education students to ensure a safe and productive learning environment for all students.
3. Provision for adequate staffing/teacher preparation.
4. Establishment of post-secondary educational programs to train additional individuals as certified special education teachers and related services providers (i.e. school psychologists, physical therapists, and speech therapists).
5. Decrease in current high staff turnover.
6. Provision for liability/legal protections for teachers and advocates.
7. Placement of students and delivery of services.
8. Mediation between school districts and parents/guardians when disagreements develop over student placements and/or services
9. Reduction of excessive paperwork.

Rationale. AASB joins with the National School Boards Association in urging Congress to fairly and fully fund this federal mandate. IDEA was enacted in 1975 when the federal government committed to paying for each child with disabilities an amount equal to 40 percent of the national average cost of educating students with disabilities. According to the National School Boards Association, federal funding accounts for approximately 18% of the necessary funding. The remainder comes directly from the regular instructional program of local school districts. The total under-funding of IDEA was estimated at $8.3 billion in fiscal year 2008.

Local school officials must be empowered to preserve a productive and safe learning environment free of undue disruption or violence. Consistent discipline requirements and procedures are the keys to a safe environment. Issues such as discipline and excessive paperwork are having a negative impact on educators; as a result fewer certified personnel are willing to teach in special education programs.

Adopted 2000
Amended 2001, 2002, 2003, 2004, 2005, 2005, 2009, 2012
Renewed 2015
(Sunset 2025)

2.6 FUNDING FOR EARLY LEARNING PROGRAMS IN ALASKA

AASB supports legislation to add additional funding for the planning and programming of voluntary early learning and family support programs, including online programs, for all children from birth to school age as an important long-term investment in Alaska's future workforce and citizenry.

Rationale. State and local performance standards set high expectations in mathematics, reading and writing for children age 5 through 7. Research indicates that earlier education is critical for many children to successfully reach those expectations. Even in communities that have Head Start programs, the program is usually unable to accommodate all children who qualify. Strict Headstart income requirements deprive many pre-schoolers who could benefit from the program. Pre-School models other than Head Start are worthy of consideration to meet this need. Appropriately housed early learning programs should be an integral part of district curriculum. Inclusion of early learning in a school has an impact on facilities planning and would be a wise use of state funds.

The state offers only very limited pilot funding for early-learning education. Many communities do not meet the qualifications for federal Head Start or early-learning funding and sources of present federal funding are uncertain. Most existing early-learning programs cannot afford certificated early-learning teachers. Programs such as Parents as Teachers and Best Beginnings can reap huge educational benefits for very little money.

Adopted 1998
Amended 2001, 2002, 2004, 2007, 2008, 2009, 2013, 2014, 2015
Renewed 2018
(Sunset 2023)

2.7 FUNDING FOR INTENSIVE NEEDS PRE-SCHOOL AND OTHER INTENSIVE NEEDS STUDENTS ENROLLING POST-COUNT DATE OR LEAVING A DISTRICT IN A SINGLE YEAR

AASB supports prorated funding for preschool students with intensive needs who turn three years old after the October count date, thereby becoming eligible for enrollment and enrolling in public school after state funding has become fixed. In addition, pro-rated funds must also be provided for all other intensive needs students enrolling after the count date. AASB also urges the Alaska Legislature to pass legislation that holds districts harmless when losing a large percentage of intensive needs students in a single count period.

Rationale. IDEA '97 requires that public schools enroll students with disabilities at age three. These students typically require not only special education services but also extensive related services (speech therapy, occupational therapy, physical therapy). Preschool students with disabilities whose third birthday falls after the October count date incur costs to the district that are not typical of other students enrolling after the count date. The district is required to provide all services identified by the IEP team. Currently, districts receive no funding for these costly services for those intensive-needs children who turn three years old after the state's October count date.

Other intensive-need students who move to a district after the October count date pose a similar financial challenge. The cost to provide federally mandated services to a single intensive needs child is many times the cost of services to a non-special needs child. Districts cannot be expected to absorb the costs of services for intensive needs children who first enroll after the count date under a budget that provides no funding to satisfy this federal requirement. Supplemental funding for post-count date intensive needs students is critical. At the same time, districts that have lost intensive needs students through transfers have already entered into binding contracts with staff and cannot easily avoid that continued cost.

Adopted 2003
Amended 2004, 2005, 2006, 2009, 2012, 2014
Renewed 2018
(Sunset 2023)

2.8 FOLLOWING THE CAPITAL IMPROVEMENT PROJECT PRIORITY LISTS FOR NON BONDED PROJECTS

AASB supports following the priority lists for non-bonded projects as presented by the Department of Education and Early Development and providing funding with no adjustments, deletions, or additions that would not otherwise be of an emergency basis. AASB strongly encourages the legislature and administration to make significant progress on eliminating the statewide capital project and major maintenance backlog.

Rationale. The Capital Improvement Projects list goes through a very comprehensive prioritization process developed and implemented, based on need, by the Department of Education and Early Development. AASB encourages the Legislature to follow the prioritized lists and recognize that fluctuations in enrollment cause many districts to face varying economies of scale when maintaining educational facilities.

Adopted 2000,
Amended 2001, 2004, 2008, 2009, 2010, 2012, 2017
Renewed 2015
(Sunset 2025)

2.9 LOCAL CONTRIBUTION IN THE SCHOOL FUNDING FORMULA

AASB supports retaining in the school funding formula the local option of establishing a local contribution based on 45 percent of basic need for borough and municipal school districts.

Rationale. The current education funding formula was developed with statewide support for all school age children. It allows for a minimum local contribution of the lesser of 2.65 mills or 45% of basic need.

Adopted 2001
Amended 2004, 2005, 2012
Renewed 2016, 2021
Sunset 2026

2.10 EDUCATION ENDOWMENT

AASB lends its full support to the establishment of an adequately funded and well-managed educational endowment as part of secure stable and full funding for education to be used for public elementary and secondary education.

Rationale. The funding of public K-12 education in our state is an annual appropriation from the General Fund and is subject to the shifting funding priorities of administrations and legislatures, and the variable level of state revenues. Budgetary cycles have increasingly failed to provide a stable and secure funding source for Alaskan students. An educational endowment will provide one proven, relatively secure, and dedicated fiscal resource to support future public education funding for our state, and allow long-range education planning with confidence in the availability of that resource.

Adopted 1997
Amended 1998, 1999, 2002, 2007, 2009, 2012, 2016
Renewed 2017, 2022
(Sunset 2027)

2.11 EDUCATIONAL TECHNOLOGY

Because of the global economy of which our youth are a part, AASB urges the state and federal governments:

a) To strongly encourage state leadership by virtue of student rights to equitable educational opportunity to ensure all classrooms are provided affordable, adequate and equitable broadband access (low-latency terrestrial broadband Internet access) to the national and international information infrastructure.

b) To implement appropriations or matching grants for instructional technology that would address hardware and software purchases, communication, infrastructure, curriculum expansion and training needs of students and staff,

c) To fund continuation and expansion of Digital 1:1 efforts for districts and AASB's Consortium for Digital Learning.

d) To join us in urging Congress to fully fund either the provisions of the Telecommunications Act of 1996 (E-rate program) or a robust educational technology substitute that protects the Universal Service Fund to help provide affordable telecommunications to rural areas.

e) To assist schools in improving Internet connectivity by using new E-Rate subsidies for construction of low latency terrestrial broadband Internet delivery systems.

Rationale. Alaskan students are growing up in a digital age that is allowing access to all global markets. If our students are to thrive in this ever-increasing global economy, K-12 schools must have the tools and trained staff to provide the appropriate education. Currently, a number of schools have seen many of their technology purchases become obsolete, outdated, and inoperable. Teachers are unable to effectively integrate technology in the classrooms due to lack or inadequacy of equipment and/or training. Current school district budgets cannot provide adequate funds to meet existing or future instructional technology needs.

Equality in educational opportunity has always been a goal of the Association of Alaska School Boards. Future economic viability will not depend as much on physical presence, but rather the ability to import, transmit or convey ideas and information electronically. Today's globally competitive economy requires that all schools have access to modern technologies–Internet access, computers, distance learning–that can open new doors of educational opportunity for our school children. Appropriations by the Alaska Legislature in 2006 and 2008 have enabled about half of the state's school districts to pilot intensive digital learning for some of their students as members of the AASB Consortium for Digital Learning.

Adopted 1997
Amended 1998, 1999, 2001, 2004, 2006, 2008, 2010, 2011, 2012, 2013, 2015
Renewed 2017, 2022
(Sunset 2027)

2.12 SCHOOL CONSTRUCTION DEBT RETIREMENT FOR BONDED INDEBTEDNESS

AASB urges the Legislature and the administration to fully honor the statutory commitments for previously incurred and future bonded indebtedness reimbursement by appropriating all funds necessary to satisfy that commitment.

Rationale. Article 7, Sec. 1 of the Alaska State Constitution states that the Legislature shall establish and maintain a system of public schools open to all children. Under AS 14.11.100 the State of Alaska commits to repay school districts at set percentage rates for school construction bonded indebtedness in past years. Extending that program into the future helps meet school construction needs in areas of the state that are able to bond. Over the past years many regions of the State have bonded for school construction with the expectation that the State would honor its obligation.

Adopted 1997
Amended 1998, 2001, 2002, 2003, 2004, 2007, 2008, 2009, 2010, 2012, 2015, 2016
Renewed 2017, 2022
(Sunset 2027)

2.13 REVENUE SHARING

Municipalities play a large part in financing education and providing community services necessary to student learning. The Association of Alaska School Boards supports restored and increased funding for Municipal Revenue Sharing & Assistance. An increase in community support cannot substitute for necessary increases in direct education funding by the state.

Rationale. Support for this program is essential. Without revenue sharing, which was vetoed in 2003, communities were forced to raise taxes to meet the cost of state mandates. Passage of SB 72 in 2008 restored the program with $60 million in general funds for distribution to communities annually over the next three years. As the level of state revenue collected under AS 43.55.011(g) fluctuates, payments to local governments may go up or down. Revenue sharing as a proportion of the state budget is near its historic low point. Statehood was premised on the notion that state-owned resources would generate tax or other revenue and that this money would be shared with local government because local government could not survive without it.

Adopted 1999
Amended 2000, 2001, 2004, 2007, 2008, 2009, 2010, 2012
Renewed 2019
(Sunset 2024)

2.14 PUPIL TRANSPORTATION

AASB urges the State of Alaska to adequately fund pupil transportation by increasing the transportation allocation to accurately reflect true costs, to avoid the use of operating fund dollars, and to provide funding for districts with increased transportation needs due to state legislated labor costs, rising fuel costs, special circumstances and/or student growth. Getting students safely to and from school is a vital part of public education.

Rationale. Passage of SB 182 in 2012 requires the Department of Education & Early Development to establish statewide standards for pupil transportation contracts and to enforce compliance with those standards in 2016. Passage of SB57 in 2013 increases pupil transportation funding at the rate of the Anchorage Consumer Price Index through November 2015, at which time the automatic increase is repealed.

Adopted 2000
Amended 2001, 2002, 2003, 2006, 2007, 2008, 2010, 2011, 2012, 2013, 2016 (Sunset 2025).

2.15 FUNDING FOR SCHOOL DISTRICT-OPERATED REGIONAL BOARDING HOME PROGRAMS

AASB supports providing adequate funding for locally controlled and operated, regional boarding high schools throughout the state.

Rationale. The number of students requesting enrollment at Mt. Edgecumbe School exceeds the space available. Legislation enacted in recent years has increased the state stipend paid for students at district operated boarding schools and expanded the authority for their operation statewide. Districts were also allowed to enter into contracts with Alaska Native corporations for operation of dormitory facilities.

Adopted 1996
Amended 1997, 2000, 2001, 2002, 2003, 2004, 2005, 2007, 2013, 2014
Renewed 2016, 2021
Sunset 2026

2.16 FUNDING FOR TRANSIENT STUDENTS IN SCHOOLS

The Association of Alaska School Boards supports development of a funding mechanism for compensating schools for students entering after the October count date without harming a school that loses a student for which it has already incurred costs.

Rationale. Each year, students throughout Alaska enroll in boarding and other schools around the state. Often, students leave schools immediately following the October count. These students generally return to their home districts. Other districts face large influx of military-dependent and resource development project students. The untimely arrival of students after the count date puts the receiving school districts at a financial disadvantage. Districts receiving students after the October count must bear the financial responsibility for educating these students without corresponding funds. Districts losing students after the count date have already committed themselves to legally binding contracts and cannot easily adjust spending levels to account for the loss of those students.

Adopted 2002
Amended 2003, 2008, 2009
Renewed 2017, 2022
(Sunset 2027)

2.17 INSURANCE COSTS

AASB strongly urges the Alaska State Legislature to thoroughly investigate**,** evaluate, and report on pooling arrangements or other funding as a way to mitigate increases in insurance costs for school districts. Districts must be permitted to individually decide to participate in pooling arrangements and other funding options favorable to their local situation. Districts should be enabled, but not required, to secure larger collaborative group medical service and group medical coverage, as well as value-based payment and procurement methods among public and private sector employees.

Rationale. Insurance costs are draining badly needed resources for the classrooms and will continue to do so unless steps are taken to mitigate these uncontrolled increases, which only add to the administrative overhead of all districts. The cost of health and liability coverage, in particular, has added to escalation of fixed costs faced by districts.

Adopted 2002
Amended 2003, 2006, 2007, 2013, 2014, 2016, 2019
(Sunsets 2024)

2.18 STATUTORY GROUNDS FOR REDUCTION IN FORCE

Every Alaska school board must be able to make responsible decisions about how to allocate district resources to provide a high-quality education program that meets the needs of students. The Association of Alaska School Boards supports clarification of the language in the law explicitly to allow the use of projections of enrollment, costs and revenues as valid bases upon which to develop a plan for reduction in force under AS 14.20.177. The Association also supports clarification of the law to recognize that school boards, acting in good faith, have discretion to decide when a reduction in force is necessary for the following year.

Rationale. Under the current wording of AS 14.20.177, NEA-Alaska has argued and at least one Superior Court judge has ruled that reductions in enrollment or revenue must have already taken place in order to reduce staff. In addition, NEA-Alaska has argued and a Superior Court judge has ruled that a school board's judgment regarding the necessity of a reduction in force is not its to make; instead, a school district must prove that a reduction in force is necessary.

A school district's ability to respond quickly to a drop in enrollment or negative change in its financial picture is already significantly limited by the fact that mid-year layoffs of teaching staff are not permitted under AS 14.20.177. Neither is an increase in costs a basis for mid-year layoffs. However, school boards should be able to respond to both actual and projected declines in enrollment or funding by developing plans to reduce staff for the following year. School boards should also have the ability to reduce staff in the following year in response to costs increases that are not offset by increases in funding.

A school board's judgment that a reduction in force is necessary is the kind of policy decision that the public elects school boards to make.

Adopted 2003
Amended 2004, 2005, 2006, 2008, 2012, 2016
Renewed 2018
(Sunsets 2023)

2.19 LEGISLATIVE FINANCIAL RELIEF FOR ONGOING TRS AND PERS EMPLOYER RATE INCREASES

The Association of Alaska School Boards supports the cost-share formula requiring the state to pay 87.44 percent of employer costs under the Teachers' Retirement System and 78 percent of the costs under the Public Employees Retirement System. AASB endorses the use of state revenue or other state-managed funding sources to retire the unfunded liability of the public employee retirement systems without supplanting funds needed for the classroom.

AASB categorically rejects the State of Alaska Department of Law's recent determination that the State of Alaska does not have a legal obligation to assume the portion of the liabilities of the State managed Teacher's Retirement System and the Public Employees Retirement System. AASB expects the State of Alaska to 100% fund to constitutional obligation both TRS and PERS.

Rationale. The State of Alaska Division of Retirement & Benefits notified PERS and TRS employers on September 3, 2015 that the State of Alaska does not believe it has an obligation to assume the liabilities of the State managed Teacher's Retirement System and Public Employees Retirement system in connection with the implementation of Generally Accepted Accounting Standard (GASB) #68 – Accounting and Financial Reporting for Pensions.

The Association of Alaska School Boards believes that the State of Alaska has a long-standing obligation to continue to provide substantial and sustainable financial support of the TRS and PERS retirement systems to ensure that Alaska's school children will be well served by high quality teachers and support staff who know that the State of Alaska remains steadfast and unwavering its support of its teachers, support staff, and their pensions.

Districts simply do not have the capacity to handle the massive unfunded liability of the state's retirement programs. Financially healthy pension funds are an incentive to attracting and retaining high quality employees in the public sector.

Adopted 2003
Amended 2004, 2005, 2006, 2007, 2008, 2010, 2012, 2014, 2015, 2019
(Sunset 2024)

2.20 ENERGY COST RELIEF

AASB urges the Alaska State Legislature to take action to mitigate energy costs facing all school districts. The relief should be based on actual energy costs and be part of an overall program to address conservation of energy, development of alternative energy programs and deferred maintenance of public facilities and buildings.

Rationale. School districts incur energy costs for heating, electricity and transportation. In most districts off the road system, those costs can eat up 30 to 40 percent of operating budgets, diverting dollars from instruction. Even when the cost of fuel declines in urban areas, those savings seldom catch up to consumers in rural communities due to lack of a competitive energy market.

Possible relief measures should include initiating an Energy Cost Increase Factor in the foundation formula and/or providing supplemental funding in the year the cost is incurred, thereby putting funding back in the classroom.

Adopted 2005
Amended 2008, 2010, 2015 2019
(Sunset 2024)

2.21 RELIABLE AND EFFICIENT SERVICE BY THE ALASKA MARINE HIGHWAY SYSTEM

AASB urges the State of Alaska to provide or subsidize frequent, reliable, equitable and efficient ferry service to all Southeast, Southwest, and Southcentral communities served by the Alaska Marine Highway System and alternatives such as the Inter-Island Ferry Authority.

Rationale. School districts in Southeast and Southcentral Alaska depend on ferry access to provide transportation to and from other communities for numerous academic and athletic activities. The lack of frequent and dependable scheduled ferry service often makes it difficult or impossible to utilize the AMHS in school-sponsored trips. The only alternative for many of the communities served by the AMHS is to arrange travel by air, which markedly increases transportation costs and in some cases causes trips to be canceled entirely.

Adopted 2006
Amended 2007, 2008, 2012, 2013
Renewed 2016, 2021
Sunset 2026

2.22 SUPPORTING BYPASS MAIL IN ALASKA

AASB recognizes that the Bypass Mail program provides the only timely and economical way to move essential materials to rural Alaska and is critical to the health of the Alaskan economy. Bypass mail allows Alaska to receive the same universal service at universal rates enjoyed by the rest of the country. AASB strongly urges the US Congress to find ways to continue funding the bypass mail program in Alaska.

Rational: Federal law establishes mail as a basic and fundamental service and requires the Postal Service to "provide prompt, reliable, and efficient services to patrons in all areas and . . . render Postal Services to all communities." Legislation proposed by Congress would unfairly single out Alaska, eliminating funding for bypass mail. Bypass mail represents a lifeline to Alaska communities, transporting food, essential medical supplies, educational materials and items critical to the life and safety of Alaskan residents.

Adopted 2011
Renewed 2016, 2021
Sunset 2026

2.23 FUNDING FOR SCHOOLS BY ESTABLISHING THE BASE STUDENT ALLOCATION IN ADVANCE

AASB supports funding for schools in advance. At a minimum, the Base Student Allocation (BSA) should be established at least one, and preferably three, years ahead to provide sufficient time for school districts to prepare and submit their budgets in a timely manner without spending unnecessary time and resources revising budgets based on legislative action after the local budget process has begun. The Education Fund, AS 14.17.300, must also be maintained and increased for this purpose.

Rationale. When state oil revenues are low the amount spent on education might decline, but local school districts would have a full fiscal year to prepare for the reduction in revenue if education funding is established at least a year in advance. Forward funding will provide fiscal stability for districts so they can make long-term decisions, reduce administrative cost and enable school districts to focus on student instruction rather than constant budget revisions.

While early funding of the education budget – i.e., a signed education funding bill within the first 30 days of the session – would also reduce the administrative burden on school districts, the legislature does not receive its revenue projections in time to accomplish that goal. Advance funding – establishing both the BSA and setting aside sufficient funds to cover it a full year in advance – would eliminate the pressure for passage of the education appropriation early in the legislative session.

Adopted 2006
Amended 2007, 2009, 2010, 2011, 2012, 201, 2015
Renewed 2016, 2021
Sunset 2026

2.24 RECONSTITUTION AND ACTIVE MANAGEMENT OF THE PUBLIC SCHOOL LAND TRUST AND PERMANENT FUND

AASB supports additional research into reconstitution of the Alaska Public School Land Trust, active management of the trust and working with Alaska Parent Teacher Associations and other educational stakeholders to establish a management board with broad stakeholder representation to that end.

Rationale. A promise was made to Alaska public school children on March 4, 1915, when "An Act to reserve lands to the Territory of Alaska for educational uses, and for other purposes," (38 Stat. 1214, Public Law 63-330/Chapter 181, 63 Congress, Session 3) was approved by Congress and signed by President Woodrow Wilson. PL 63-330 requires when federal lands are surveyed, Sections 16 and 36 in each township shall be and were reserved for the support of common schools in Alaska.

Adopted 2007
Amended 2010, 2014
Renewed 2017, 2022
(Sunset 2027)

2.25 SUPPORTING EXCELLENCE IN SCIENCE, TECHNOLOGY, ENGINEERING, ARTS, AND MATH INSTRUCTION

AASB recognizes and supports national efforts to increase the nation's scientific and engineering talent pool in Science, Technology, Engineering, Arts and Math (STEAM/STEM) fields. AASB urges the Governor and the Alaska State Legislature to establish a fund or provide grants to invest strategically in STEAM/STEM education, focusing on professional development, materials and equipment needed for active, hands-on learning for K-12 students in classrooms across the state.

Rationale. The Alaska Department of Education & Early Development has added science standards and testing requirements, and the Elementary and Secondary Education Act added this requirement in 2010. There is growing recognition that the U.S. must increase its commitment to science and math to retain its competitive advantage in the world. Students learn science best by actively engaging in the practice of science, and they develop cognitive skills needed to excel in science and math through the arts, especially music. Teachers need professional development and science resources to offer students outstanding hands-on, active learning opportunities in the sciences. Science classroom equipment and consumable supplies are unique and expensive. Skyrocketing energy costs and increasing operating costs consume school budgets, limiting the ability of districts to address long-deferred expenses such as science curriculum and equipment. Excellence in STEM fields is vital to Alaska's and the nation's long-term economic prospects.

Adopted 2008
Amended 2010, 2012, 2014, 2015
Renewed 2018
(Sunset 2023)

2.26 RECOMMENDING REVISIONS TO THE STEP-DOWN HOLD-HARMLESS CLAUSE FOR REDUCTIONS IN ADM AND NEW HOLD-HARMLESS CLAUSE TO ENCOURAGE SCHOOL SIZE EFFICIENCY

AASB recommends that the Alaska Legislature revise from 5 percent to 2.5 percent the hold-harmless threshold (AS14.17.450) for reductions in average daily membership. AASB also recommends that the Alaska Legislature adopt a new additional three-year hold-harmless provision for school districts who would otherwise lose state funding due to the consolidation of existing school facilities to increase efficiency.

Rationale. Passage of HB 273 by the 25th Alaska Legislature included a provision that if a school district's ADM adjusted for school size decreases by 5 percent or more from one fiscal year to the next, the school district may use the last fiscal year before the decrease as a base fiscal year to offset the decrease. The provision includes a step-down clause holding districts harmless for a portion of the ADM decrease during the next three fiscal years, if the 5 percent enrollment decline continues and none of the decline is attributable to a loss of students caused by a boundary change under AS 29.

Under AS14.17.250, school districts that experience enrollment declines of anywhere between 2 and 5 percent would be impacted severely because they would not qualify for the step-down provision.

Adopted 2008
Amended 2015, 2017
Renewed 2018
(Sunset 2023)

2.28 URGING THE STATE TO MITIGATE THE IMPACTS OF UNUSED OR UNDERUTILIZED FACILITY SPACE IN DISTRICTS

AASB urges the State of Alaska and work to relieve the financial impacts on school districts when reduced enrollment or budget constraints result in unused or underutilized school facilities. AASB urges mitigation of the burden posed by the underutilization or closure of facilities that still have operational costs associated with them.

Rationale. School districts report instances of excess facility infrastructure that were built before advent of state guidelines for construction or because of declining enrollment or both. In some cases, schools have been closed because ADM fell below 10. Excess space must be insured, operated and maintained regardless of whether the funds generated under the foundation formula are sufficient. Closed schools must be insured and should incur some operation and maintenance expenses to ensure that they will be usable if ADM should later warrant reopening them.

Adopted 2008
Amended 2014, 2016,2018
(Sunset 2023)

2.29 URGING THE STATE TO CONDUCT AND FUND FACILITY CONDITION SURVEYS FOR DISTRICTS TO SUPPORT CIP REQUESTS FOR MAJOR MAINTENANCE AND FACILITY REPLACEMENT PROJECTS

AASB urges DEED to conduct facility conditions surveys for all districts in order to establish a uniform assessment of building conditions throughout the State. The Department of Education should conduct facility condition surveys every five years, on a rotating basis. The State administered facility conditions surveys should be accepted as complete and valid, including recommendations for the purposes of CIP requests by districts for major maintenance and facility replacement projects. Nothing shall preclude a district obtaining an independent evaluation of its facilities.

Rationale. The CIP process is a complex process that can be challenging for smaller districts who cannot afford dedicated experienced staff with the unique skillsets required to master the process. REAAs are reliant completely on the State for educational funding. This unique relationship with the State means that in order for REAAs to procure a facility conditions survey from a private entity (which is a requirement to increase their CIP ratings) they are literally using State funds to request State funds. Additionally, they are choosing to reallocate funds that could be used for instructional programs towards a State application process for facility upgrades and improvements. It makes sense for the State to provide resources to conduct facilities condition surveys for districts. This would enable the State to acquire a baseline survey of facilities and to establish a uniform listing of facility conditions. Having the State assume responsibility for this effort would provide the most efficient use of State funds.

Adopted 2008
Amended 2009, 2014, 2015, 2016
Renewed 2018
(Sunset 2023)

2.30 URGING THE ESTABLISHMENT OF A FUNDING POOL TO HELP FUND TRAVEL FOR STUDENTS TO ATTEND STATE-LEVEL COMPETITIONS

AASB recognizes that a comprehensive public education includes extracurricular activities such as sports and the arts. Involvement in interscholastic activities has been shown to increase academic achievement. As such, the opportunity for students to participate at state-level tournaments, festivals and competitions is an important component of a well-rounded education. Due to the ever increasing costs associated with travel and lodging for school districts to attend state-level competitions, AASB urges the Alaska School Activities Association, the Alaska Legislature and the Governor to work together to establish a funding pool to help school districts fund travel for students to attend state-level tournaments, festivals or competitions.

Rationale. Travel expenses to state-level tournaments and competitions are not normally budgeted by school districts. The preponderance of the burden to fund travel for extracurricular activities has fallen to parents and rural communities that are facing more difficult economic issues and fewer available dollars to support these opportunities. The ASAA and the state should help by establishing a funding mechanism to help students to attend state-level competitions.

In addition, the cost of student activities is significantly more expensive for school districts whose students live off the road system and even more for those schools not on the ferry system and distant from air transportation hubs. The state's appropriate funding to assure student access to the benefits of interscholastic activities should include funding to address access from remote rural schools.

Adopted 2009
Amended 2014, 2015
Renewed 2019
(Sunsets 2024)

2.31 URGING THE CONTINUATION OF FUNDING FOR CAREER AND TECHNICAL (VOCATIONAL) EDUCATION

AASB supports increased funding of Career and Technical (Vocational) Education through the foundation formula in AS 14.17.420 and funding for Alaska Construction Academies and regional training centers.

Rationale. Vocational, career tech, and trades offerings help engage students and provide an effective alternate platform for academic education. These courses along with the necessary equipment help middle and high school students learn about and focus on potential career paths to prepare them for post-secondary education and careers in our state.

Adopted 2009
Amended 2010, 2011, 2012, 2014, 2015, 2017, 2018
Renewed 2019
(Sunset 2024)

2.32 SUPPORTING STATE FUNDING FOR SCHOOL MEALS

AASB supports an adequate financial appropriation from the State and Federal Government to strengthen and expand the National School Lunch and Breakfast Program in Alaska and other local programs to be sure that a culturally-relevant and genuinely nutritional school breakfast programs and a sustainable lunch may be available to all children at all schools throughout the state. Such funding must be accomplished without diverting funds that belong in the educational foundation formula. Federal program requirements should be flexible enough to allow for alternative delivery mechanisms.

Rationale. No child should go without breakfast or lunch. The lack of adequate nutrition affects the cognitive and behavioral development of children. Food insecurity, meaning a lack of access at all times to enough food for a healthy, active life, was reported among 15 percent of Alaska children, compared with 11 percent of Alaska adults, in a 2006 study (the Behavioral Risk Factor Surveillance Survey). The problem is more acute in rural Alaska, where nearly one child in four experienced food insecurity.

The National School Breakfast Program decreases food insecurity in children by providing five healthy meals a week. In Alaska schools, 40 percent of students qualify for free/reduced school meals; of these 45,000 students, 15 percent, or about 7,000 children, do not attend schools that offer a breakfast program. In all, more than 100 public schools in Alaska did not sponsor or offer the federal School Breakfast Program in the 2008-09 school year, due primarily to a lack of funding.

Adopted 2010
Amended 2015, 2018
Renewed 2015, 2020
(Sunset 2025)

2.33 SUPPORTING PARTIAL FOUNDATION FUNDING FOR SCHOOLS WITH SEVEN TO NINE STUDENTS FOR UP TO TWO YEARS

AASB urges the Alaska Legislature to provide funding for those schools that fall below the minimum number of students for up to two years before a district is not funded for that school. AASB supports a revision to AS 14.17.450 providing partial foundation funding for small, rural Alaskan schools with seven (7) to nine (9) students. These schools would be funded for up to two (2) years at the following percentage of the amount that would be funded if the school had ten (10) students:

Seven (7) students	= 70% funding
Eight (8) students	= 80% funding
Nine (9) students	= 90% funding

Rationale. The school is often the community center and heart of village life. Education is a constitutional right of all students in Alaska. The Education Clause of Alaska's Constitution (Article VII, Section 1) provides, in relevant part that the "legislature shall by general law establish and maintain a system of public schools open to all children of the State." In small communities, school enrollment often hovers around 10 students. Due to fluctuations in population, the number of students in these schools may drop below 10 one year, then increase above 10 the following year. While it is inefficient to have a school for a small number of students, it is equitable to each child to be schooled in the village of their home.

Unfortunately, with the current funding requirements of AS 14.17.450, schools receive no funding when the enrollment drops below 10 students, which most often results in the closure of the school. When school enrollment hovers around 10 students, no one can predict whether these schools will have ten children enrolled through the entire count period until the last day of that period.

Most of these students cannot commute to a neighboring school. Even considering closing a school creates an exodus of some families and discourages families considering moving to the community. Often, the school is a major community employer and a closure damages the community and any hope of economic viability. This proposal will allow small schools to operate with a partial budget for up to two years, allowing the school and community time to rebound from population fluctuations, rather than closing prematurely and leaving students without a school or teacher.

Adopted 2010
Amended 2014, 2018
Renewed 2015, 2020
(Sunset 2025)

2.34 FOCUS ON GRADE-LEVEL PROFICIENCY FOR PRE- K TO GRADE TWELVE STUDENTS AND ADDRESS THE NEED FOR REMEDIATION

AASB supports additional legislative funding opportunities for intervention for pre-K-12 students needing to make improvement to reach grade level proficiency.

AASB supports the goal of helping students complete high school with measurable and/or identifiable skills to enter the workforce or study at a postsecondary institution, without the need for remedial coursework.

Rationale. The April 2011 report of the Alaska Advisory Task Force on Higher Education & Career Readiness stated in part: "Children who receive quality early education arrive at school ready to learn and perform better in school. They are less likely to need expensive special education interventions, and they are more likely to graduate from high school and to successfully enter the workforce. Research is clear that when students enter kindergarten, 40% of them on average are one to three years behind grade level, and too many of them stay behind throughout their school careers. Alaska can invest a relatively small amount in early childhood and innovative K-12 programs, or a vastly greater amount at the college level. "

AASB believes that the keys to long-term student success include early childhood development and improved reading, writing, and math skills in K-3 students. Good data show that students who succeed in school become more productive citizens, enhancing their own lives and placing fewer demands on public services, from welfare to prisons. Interventions at every grade level are essential to achieving proficiency and creating a well-trained workforce.

Adopted 2011
Amended 2014, 2018
Renewed 2016
(Sunset 2023)

2.35 ADDRESSING THE NEED FOR REMEDIATION

AASB supports the goal of helping students complete high school with measurable and/or identifiable skills to enter the workforce or study at a postsecondary institution, without the need for remedial coursework.

AASB supports additional legislative funding opportunities for intervention for K-12 students needing to make improvement to reach grade-level proficiency.

Rationale. AASB believes that the keys to long-term student success include early childhood development and improved reading, writing, and math skills in K-3 students. Good data show that students who succeed in school become more productive citizens, enhancing their own lives and placing fewer demands on public services, from welfare to prisons. Interventions at every grade level are essential to achieving proficiency and creating a well-trained workforce.

Adopted 2011
Amended 2012, 2015, 2018
Renewed 2016
(Sunset 2023)

2.36 COMPREHENSIVE STATEWIDE ENERGY PLAN

AASB urges the Alaska State Legislature to work with the State Congressional Delegation and stakeholders to develop, fund and implement a comprehensive statewide energy plan that includes current energy sources, conservation of energy and development of alternative energy. The plan should address and fund development of energy efficiency in public facilities and buildings.

Rationale. The State of Alaska currently has no comprehensive statewide energy plan in effect. A comprehensive statewide energy plan would reduce costs to all, directly benefitting school districts and ultimately benefitting all citizens. High consumer energy prices deplete funding for other needs, especially in school districts, which are one of the state's largest consumers of energy. The legislature and administration have been generous with energy cost relief in recent years, which school districts appreciate. However, the relief is not addressing the problem of energy, only the symptom—high costs.

Adopted 2012
Amended 2015, 2018
Renewed 2017, 2022
(Sunset 2023)

2.37 DISTRICT COST FACTOR

AASB urges the Alaska Department of Education & Early Development to comply with state statute AS 14.17.460 that requires regular review of District Cost Factors and development of recommendations for appropriate adjustments, to ensure equity in school funding since the current data being used to determine the District Cost Factors are over 10 years old. Elements in establishing District Cost Factors should include not only the true cost of goods and services but also the mix of goods required in all communities.

AASB further urges the Alaska Legislature provide funding for the required District Cost Factor review and update the cost factors, based upon the resulting DEED recommendations. In addition, AASB urges the Legislature to establish an appeals process related to the DEED recommendations and to include a one-year hold harmless and a phased step-down in the event a school district loses funds due to revisions in the Foundation Formula cost factors. Regular revision of the District Cost Factors is critical to equitable distribution of funding and to address ongoing disparities between districts.

Rationale. The Foundation Formula for K12 education recognizes the different costs of providing public education around the state. Changes to AS 14.17.460 enacted in 2008 established a five-year schedule of changes to the cost factors that were phased in completely in 2013. AS 14.17.460 (b) requires the department to monitor cost factors and to prepare recommendations for the Legislature to consider every other fiscal year.

Adopted 2013
Amended 2014, 2015
Renewed 2018
(Sunset 2023)

2.38 URGING THE STATE OF ALASKA TO FUND ALTERNATIVE MODES OF TRANSPORTATION FOR ALL DISTRICTS

AASB urges the Alaska Legislature to amend the pupil transportation statute (AS14.09.010) to provide equitable funding of transportation for all school districts.

Rationale. In school districts with diverse transportation needs due to the absence of a road system, student travel costs are varied and can be significantly high. State regulations at 4 AAC.27.990 (5) describe vehicles that can be used when a school bus cannot transport students. However, four school districts, Aleutians Region, Chugach, Hydaburg and Pribilof, are not currently eligible for pupil transportation funding because they were not receiving funding in 2003, when AS14.09.010 was amended.

Adopted 2013
Amended 2015
Renewed 2018
(Sunset 2023*)*

2.39 URGING A TRANSPARENT PROCESS WITH STAKEHOLDER INPUT AND PRIORITIZATION OF EQUITY CONCERNS IN STATE STUDIES

AASB urges the responsible agencies to conduct education studies in a transparent process with multiple opportunities for stakeholder input. The studies should use relevant Alaska data from all parts of our diverse state, promote educational best practices, benefit all students in an equitable manner providing an adequate education for all.

Rationale. HB 278 authorized four studies: a salary and benefits schedule for school districts, teacher tenure reform, statewide prototype school design and construction public education funding. The studies were completed in 2016 in the midst of a severe budget deficit and laid fallow. Stakeholder input was inconsistent and limited. Transparency of study designs and practices was not as forthright as many stakeholders and districts had hoped. Such studies, if used for the basis of statutory or budget changes, need to reflect the variety of unique needs and costs for each school as many rural districts have varying costs in hub or out-lying villages. Best practice is not always the cheapest practice to fund.

Adopted 2014
Amended 2016
Renewed 2019
(Sunset 2024)

2.40 SUPPORTING THE USE OF FEDERAL IMPACT AID BY AFFECTED DISTRICTS

AASB supports allowing affected districts to utilize all of the Federal Impact Aid which districts are eligible for without any deduction made by the State in calculations of state funding pursuant to AS 14.17. The State currently deducts up to 90 percent of the eligible funds for affected districts. The purpose of such Impact Aid funds is to assist school districts with the reduced revenue availability and increased expenditures that arise from qualifying federal activities and enrollment of qualified federally connected children.

AASB urges that impact aid not be reduced based on title ambiguity that exists in rural households.

Rationale. It is important that the Federal Impact Aid that affected districts are entitled to can be used for its intended purpose without further impacting the education of students. Federal impact aid is intended to flow to the district within which the aid is generated. The purpose of Impact Aid is, in general, to provide assistance to local school districts with qualifying numbers of children residing on Indian lands, at military bases, low-rent housing properties, or other Federal properties, and children who have parents in the uniformed services or employed on eligible Federal properties who do not live on Federal property. The intent of the aid is not only to provide funding for lands that might otherwise be taxable but also to provide revenue to the receiving district for the additional costs associated with the education of the students. For example, the cost of educating students on military land (public schools on military bases) results in uncontrollable utility costs with rates that are significantly higher than those schools that operate off of a military base. Also, military bases most often bring in an influx of students from various cultures and languages. The addition of these ELL students, and the transiency of military connected students, adds to the need for additional services from the local school district. This increase in utility costs and costs associated with servicing ELL students are not offset by the remaining 10 percent of the Federal Impact Aid that an affected district is allowed to use.

The State is not required by the Impact Aid laws to take into account Impact Aid in determining state aid for education. The federal law only allows a limited exception for a State to take into consideration Impact Aid in determining State Aid if it passes an equalization test (or disparity test). The State should not exercise this limited exception and, instead, should allow affected districts to receive the Impact Aid for which they qualify. In a similar manner, even though organized areas (city and borough school districts with a municipal tax base) are technically allowed to maintain up to 90 percent of their Federal Impact Aid, they are then penalized by the required local contribution as a substitute for part of the foundation funds allocated to each district.

For one district 20 million dollars of the awarded impact aids fund had to be given to the State over a ten year period due to the state's auditing process of determining which households are eligible.

Adopted 2014
Renewed 2019
(Sunset 2024)

2.41 FUNDING FOR INTERNET SERVICES

AASB urges the Alaska Legislature and Federal Government to enact and fully fund equitable Internet services for rural schools and to extend those benefits to urban school districts as well, to support increasing infrastructure for internet access to rural and underserved communities through more efficient e-rate access for remote learning, public-private partnerships, state-wide consortiums, etc., ensuring that all students and staff have access to reasonably priced, high speed high bandwidth connectivity. Digital literacy is a fundamental skill in the 21st century**.** Equitable Internet access will allow all students to develop this skill.

Rationale. The lack of broadband Internet for rural schools continues to exacerbate program inequities for rural schools. AASB thanks the Legislature for including a provision in HB 278 for rural school districts to receive speeds up to 10 megabits. The Legislature did not provide the funding that would allow all eligible schools to have 10 megabits and did not include urban schools as eligible for the state-provided Internet benefits. HB 179 and SB 82, as proposed, would have also benefited urban districts. The Legislature should include the provisions for urban districts and fully fund the program.

Adopted 2014,
Amended 2019
(Sunset 2024)

2.42 FUNDING FOR STUDENTS WHO RETURN TO SCHOOL TO GET A DIPLOMA

AASB urges the Alaska Legislature to provide funding to school districts through the foundation formula for "overage" students to return to school to get credits to earn their diploma. Funding should include students through 21 years old**.**

Rationale. Students without a diploma are denied access to post secondary and employment opportunities including the military. Some students who did not pass the HSGQE lost hope of ever earning a diploma so dropped out of school. All students can now receive a diploma, whether they passed the former HSGQE or not. Districts are encouraged to recruit all students to return to school to earn credits and to receive a diploma if they so desire.

Adopted 2014
Amended 2015, 2019
(Sunset 2024)

2.44 URGING THE STATE OF ALASKA TO MAINTAIN THE 10 STUDENT MINIMUM ADM FOR SCHOOL FUNDING

AASB urges the Alaska Legislature to maintain the present minimum student count of ten (10) students as the minimum school size and base level of funding for a school building in the Public School Funding Program formula.

Rationale: Schools are the center of communities or neighborhoods. They provide a fundamental service to the public in the area that they serve. School boards and community members value their local schools and the educational opportunities provided to their children and youth. Small schools help to maintain the local cultural identities and historical perspectives of each community within the state of Alaska.

During the 2014-2015 school year, there were 65 schools identified with student counts between 10 and 24 students. If the minimum count were raised to 25, all of these schools would not be funded at the minimum level.

Under Article VII, Section 1 of the Alaska Constitution, the state has a duty to establish and maintain a system of public schools open to all children in the state. A legal opinion for the Citizens for the Educational Advancement of Alaska's Children notes that closing small schools would result in disparate treatment of children in two ways: "First, the overall amount of funding available and the educational resources available to provide these children with an adequate education will be reduced. Second, there will be dramatic disparities in the educational opportunities available to these students who will be deprived of the educational resources of the school environment, classroom supports, and a classroom teacher. The evidence-based scientific research supports the need for students to be educated with their peers in a classroom with a qualified teacher. The State will be unable to point to any scientific, research-based alternative as a substitute for educating children in a school with a qualified teacher and administrative support. Without such an alternative, the proposed legislation will violate the State Constitution."

Adopted 2015
Renewed 2020
(Sunsets 2025).

2.45 URGING THE LEGISLATURE TO ADDRESS INEQUITIES IN SCHOOL FUNDING

AASB urges the Alaska Legislature to address and fund inequities in school funding identified in a July 2015 report to the Legislative Budget & Audit Committee.

Rationale. A report for K-12 funding by Augenblick, Palaich & Associates, entitled "Review of Alaska's School Funding Program," recommends that the K-12 foundation formula program (AS 14) provide more opportunities for limited-income children and English language learners to ensure their academic progress. The consequences of an ever-growing gap between rich and poor can be improved with higher educational outcomes. More support to address achievement for Alaska Native students is critical to overcoming the challenges of the effects of oppression and restoring knowledge and culture of the first people of Alaska.

Adopted 2015,
Amended 2018
Renewed 2020
(Sunset 2025).

2.46 RESOURCES TO EFFECTIVELY IMPLEMENT THE ALASKA SAFE CHILDREN'S ACT

AASB urges the Legislature to provide resources to effectively implement the mandates of the Alaska Safe Children's Act (AS 14.30).

Rationale. School Board members recognize the importance of training to staff in protecting children and in educating children on healthy relationships and preventing child sexual abuse. With the passage of the Alaska Safe Children's Act many unfunded mandates were legislated. Just the mandated training for all certificated and classified staff in "restraint and seclusion" will take two days per staff. The cost will be thousands of dollars and a loss of academic instructional time with their students. A plan to examine all the costs of unfunded mandates and provide resources and time to make up for loss of instruction for children's learning is needed.

Adopted 2015
Renewed 2020
(Sunsets 2025).

2.47 LOCAL CONTROL OF SCHOOL FUNDING

AASB urges the Legislature to amend AS 14.03.260 (a) to specify that state pass-through mandates for funding of charter schools do not apply to municipal funding for education so that the required local contribution may be allocated by school boards as they see best in their districts.

Rationale. Each school district is unique in student enrollment, choices available to students in program and course offerings, and in operational costs. Locally elected school boards are best equipped to decide revenue allocations for their districts.

Adopted 2015
Renewed 2020
(Sunset 2025).

2.48 INCREASING THE FUND BALANCE CAP FOR SCHOOL DISTRICTS

AASB urges the Legislature to amend AS 14.17.505 (a) to increase to 15 percent or higher the cap on fund balances.

Rationale. The 10 percent cap on carryover budget balances has restricted school districts since 1998. Extra funds in excess of the 10 percent cap that are gained from realized efficiencies and effective budget management must be transferred back to the state. This can discourage conservative spending. In addition, school funding fluctuates unexpectedly with student count and government funding, creating potential cash flow problems.

Adopted 2015
Amended 2020
(Sunset 2025).

2.50 Inflation-proofed Base Student Allocation (BSA) Investments

AASB urges the State of Alaska to make inflation-proofed incremental investments to the BSA.

Rationale. School Districts have been essentially flat funded since FY 2017. Flat funding means cuts as costs do not stay flat. At the same time children and youth need to be prepared to meet the needs of the growing work force and to be prepared to be engaged citizens. Education is a changing field. Strategic investments in science, career technology, and social-emotional learning are imperative. A modest increase to the Base Student Allocation, including a glide path to make catch up investment to the flat funding is needed to be set for the next three years.

Adopted 2018
(Sunsets 2023)

2.51 FULLY FUNDING THE REAA RURAL CONSTRUCTION FUND AND BOND DEBT REIMBURSEMENT

AASB supports fully funding the REAA Rural Construction Fund and Bond Debt Reimbursement.

Rational: The State of Alaska is responsible for providing an adequate education for all Alaska-children and thus is responsible to fully fund the REAA Rural Construction and Bond Debt Reimbursement Fund in order to provide safe facilities to educate all Alaska students. A proactive approach to funding capital project applications will save result in future major maintenance costs in the future of facilities and infrastructure that has passed its design life.

Adopted 2019
(Sunset 2024)

2.52 SUPPORT THE UNIVERSITY OF ALASKA SYSTEM

AASB supports increased and adequate funding of the University of Alaska.

Rationale: The rationale for this resolution is to support adequate funding for the University of Alaska system. The University of Alaska system works collaboratively with K-12 education systems to offer dual credit opportunities; develops partnerships such as ANSEP; and prepares the future work force of Alaska. The University of Alaska system also supports and conducts research on issues important to Alaskans.

Adopted 2019
(Sunset 2024)

2.53 URGING THE STATE TO FUND AS 14.14.115, THE COOPERATIVE ARRANGEMENT GRANT PROGRAM TO EMPOWER DISTRICTS TO FIND GREATER EFFICIENCIES

AASB urges the state to recognize, encourage, and empower districts to do the necessary work to combine efforts and share resources for greater efficiency and effectiveness.

Rationale. There are great models of collaborative work between districts across the state. These efforts require extensive work and cooperation between school boards and district personnel. There is already a statute in place for this purpose but it has not been funded, and requests for support under 14.14.115 have been denied. A proper appropriation of funds for this purpose will encourage and increase these efforts between districts.

Adopted 2019
(Sunset 2024)

2.55 URGING DEDICATED FUNDING OUTSIDE THE FOUNDATION FUNDING FORMULA

AASB requests the Alaska Legislature to establish dedicated funding outside the Foundation Funding Formula for the express purpose of supporting school districts in hiring health professionals, including school nurses, counselors, social services managers, and mental health professionals, to support the health and well-being of Alaska's students.

Rationale: The credentialed school nurse, with specialized medical background, academic preparation and professional skill, is especially qualified to strengthen the educational process through improvement of the health status of students and to develop and provide leadership for the school's comprehensive health program; and

Chronic illnesses among children in Alaska have been increasing and obesity has been identified as a major health concern in our state and nation, and the incidence among children has been increasing at a rapid rate; and virtually all of Alaska's public schools have students with asthma, those with the need for emergency injections for severe allergies or migraine headaches, and those with children who need blood glucose monitoring and/or insulin injections at school, in addition to other health-related concerns.

Under Section 504 of the Federal Rehabilitation Act of 1973, students with disabilities have the right to receive a free appropriate public education, which includes reasonable accommodations required for the management of chronic medical conditions, of which numerous children in public school classrooms in Alaska have that require special nursing procedures or monitoring; and

In Alaska, the student to credentialed school nurse ratio far exceeds the U.S. Department of Health and Human Services recommendation of 750:1 in regular student populations and 100:1 in special needs student populations; and

The Alaska Department of Health & Social Services cites that school nurses support student success by providing health promotion, disease prevention and management, health care assessment, intervention, and follow-up for all children within the school setting; and

School attendance is linked to academic success and graduation rates, and a higher nurse to student ratio is associated with better attendance rates; and students with a full-time school nurse have about half the student illness- or injury-related early releases as students from a school where no school nurse is present.

Adopted 2020,
(Sunsets 2025

2.56 FUNDING FOR COVID-19 RELATED EXPENSES FOR EDUCATION

AASB supports all efforts on the part of the Alaska Legislature and the Federal Government to provide additional funding allocated directly to K-12 school districts to meet the needs of districts created by the COVID-19 pandemic.

Rationale: While school districts received some additional funding for COVID-19 related expenses in April of 2020 through the CARES Act, the scope of these expenses was difficult to predict and, in many cases, exceeded the allotted funds. Needs such as adequate ventilation for buildings, personal protective equipment, increased food service costs, costs for supporting internet connectivity for students, etc. are critical to allow schools to operate in a safe fashion for students.

Many districts in Alaska are continuing to experience increase in expenses as a result of the COVID-19 pandemic. The pandemic has also negatively impacted enrollment of several districts, making it even more difficult to maintain critical student educational services. Several municipalities who have been traditional strong fiscal partners for educating children in the districts afce similar expense increases and tax revenue short falls related to the pandemic. Federal and State relief to date has not universally provided funding to address these additional costs, nor declines revenues

Adopted 2020,
(Sunsets 2025)

2.58 ***Teacher Education Loan Expansion***

To amend Alaska State Statute A.S. 14.43.700 to retroactively include hub communities that are a gateway to other eligible rural communities, regardless of population, allowing educators in the area to be eligible for the Teacher Education Loan (TEL) Program.

Rationale: In order for a teacher to be eligible for the TEL Program's loan forgiveness they must agree to return to "rural" Alaska to teach for 4 years. AS 14.43.700 states, in relevant part, that "rural means a community with a population of 5,500 or less that is not connected by road or rail to Anchorage or Fairbanks." According to the 2010 Federal Census, Bethel's population is 6080. Therefore, Bethel does not technically meet the definition for a rural community in Alaska; and with increasing population trends, other regional hub communities do risk similar case despite the following facts:

- Hiring of local individuals to teach in local schools has long been a goal of rural school districts. LKSD has a future teacher candidate scholarship that, if coupled with the TEL Program, provides funding to enable local individuals to obtain education degrees and return to our region to teach.
- Teacher retention has been difficult all over the U.S. but has been a critical issue for all rural Alaska. In Bethel teacher retention has been particularly problematic. Funding, such as the TEL Program, would be extremely helpful in encouraging teachers to return home to the Bethel area.
- The population guidelines related to this statute have not been changed since its inception. Yet, according to the definition that applies to Medical Education Support (AS 14.43.510(i)) the definition for rural is the same as the TEL Program except the population restriction is set at a more reasonable 7,500.
- Bethel, like all other rural hub communities, is not connected to any other community by way of a conventional road. All travel and/or supplies must be by completed plane or barge. Because of this the cost of living in Bethel is quite high. Bethel is clearly a rural community.

Adopted 2021
(Sunsets 2026)

2.60 ***Power Cost Equalization***

The Power Cost Equalization (PCE) Program was established by the state of Alaska in 1985 as one of part of a Statewide Energy Plan to reduce the electric rates paid by rural consumers to levels comparable to those paid by the consumers in Anchorage, Juneau, and Fairbanks.

The PCE program was established to assist rural residents at the same time state funds were used to construct major energy projects to assist more urban areas. Most urban and road connected communities benefit from major state-subsidized energy projects such as the Four Dam Pool, Bradley Lake, and the Alaska Intertie.

The State-funded PCE program provides a subsidy to rural electric utilities that pass on the savings to residents and municipal entities in the form of discounted electric utility bills.

"The Alaska Energy Authority (AEA), along with the Regulatory Commission of Alaska (RCA), administers the program that serves 82,000 Alaskans in 193 communities that are largely reliant on diesel fuel for power generation" (AEA's PCE Frequently Asked Questions).

The intent of the PCE program was to provide energy assistance to rural Alaskans with the assurance that rural residents would have a dependable and sustainable program for the foreseeable future.

Rationale: The Power Cost Equalization (PCE) program was created through an understanding between rural and urban lawmakers when the legislature agreed to fund the large dam projects to offset energy cost for the urban areas. PCE is the rural equivalent of the large dam projects since large dam projects weren't probable in rural Alaska. The PCE program provides equitable support for affordable energy and reduces the electric rates paid by rural consumers to levels comparable to consumers in urban areas that benefit from the large dam projects. High electric costs increases all other costs due to the "trickle-down" effect on everything. PCE helps families provide adequate setting to prepare students for learning.

Adopted 2021
(Sunsets 2026)

2.61 FUNDING FOR SKILL PROFICIENCY AND CREDIT RECOVERY RELATED TO COVID DISRUPTIONS

AASB requests that the Alaska State Legislature increase the Base Student Allocation by 20% for the 2021-2022, 2022-2023, 2023-2024, and 2024-2025 school years to fund skill proficiency building and credit recovery for students in grades K-12. These funds shall be used for extended-day learning or summer intensive programs aimed at increasing proficiency in Reading or Math; or credit recovery in any subject required for a student to meet State of Alaska Graduation requirements.

Rationale: The disruptions caused by the Covid-19 pandemic have caused many Alaska children to fall behind in reading and math proficiency; but also in credits needed to graduate. Combined with the enormous budgetary strain faced by almost 20 years of flat funding, districts need additional resources to assist these students in meet standards and stay on-track for graduation. This request will allow districts to rely on stable funding to cope with the extra labor and programmatic demands needed to teach these students in extended learning and summer school programs outside the regular school offerings over the next 4 academic years; starting in the summer of 2022.

Adopted 2021
(Sunsets 2026)

2.62 SUPPORT FOR THE ADOPTION OF LEGISLATION FOR STATE-FUNDED VOLUNTARY EARLY CHILDHOOD (PRE-K) EDUCATION IN PUBLIC SCHOOL DISTRICTS

AASB urges the State of Alaska to transform public education by passing legislation that ensures funding for high quality, accessible, and voluntary pre-K public education. A high-quality public education is guided by learning standards; balances performance expectations across age-appropriate developmental domains; implements and monitors effective teaching and learning practices; and supports the professional development of highly qualified, sustainable staffing.

Rationale: School readiness starts in pre-Kindergarten aged students. The necessity of preparing children for school is never more important than now, and sustainable funding is necessary.

Respected research shows the importance of high-quality pre-K experiences for young children's cognitive, language, and social emotional development. Alaska's reading scores on state assessments are below students' abilities and expected outcomes. Pre-Kindergarten is proven to support language development and reading readiness, along with overall academic performance over time. Children who experienced high quality pre-K programs perform well throughout their school careers and further in life.

Scientific studies repeatedly show that effective early childhood education and support services benefit all groups of children and bring significant value to groups that could otherwise not afford it, thus improving equity in education for all. Additionally, early childhood education is of great value to all children and should be available to all on a voluntary basis because it provides a sound foundation for Kindergarten readiness and helps to develop skills, knowledge, personal competence, confidence, and a sense of social responsibility.

Furthermore, early education (pre-k) programming is a non-partisan policy proven to be one of the soundest educational investments the public can make, providing demonstrated, significant, long-term savings in the costs of special education, grade retention, welfare, and crime. When a community reaches high levels of educational attainment, it becomes a community that is less vulnerable to poverty, unemployment, and crime.

The reduced need for public spending on remedial education, criminal justice, and social support programs, in addition to citizens that are active and productive members of their communities, are key reasons why including pre-K funding within the K-12 system is a necessary investment in our children, our communities, and our state.

Adopted 2021
(Sunsets 2026)

2.63 Funding for Education and Transportation

AASB urges the Alaska Legislature and Administration to provide adequate funding to public education in the State of Alaska, to increase the Base Student Allocation to compensate for inflation, and increase the student transportation award to cover the true costs of student transportation.

Rational:

In addition to the ongoing stance supporting adequate education funding we feel its important to emphasize the costs of transportation and how these expenses have outpaced the state funding provided for this student service.

Adopted 2022
(Sunsets 2027)

2.64 Base Student Allocation Increase: Making Up for Lost Ground Due to Inflation

AASB urges the State of Alaska Legislature to increase the Base Student Allocation (BSA) as the BSA does not change automatically in response to inflation or any other factors, only by passing legislation that modifies the statute.

Rational: This resolution is to help support School Districts that have been flat funded since Fiscal Year 2016-2017. In the 32nd Legislature (2021-2022), HB 272 would increase the BSA in FY23 and again in FY24 allowing districts to address operational costs and plan to meet student need; and, HB 273 would proof against inflation beginning in FY25 for all future years.

When School Districts lose ground financially, schools with growing class sizes receive fewer critical services. The disruption caused to the delivery of education by the pandemic has resulted in a greater need for support services and interventions in schools in order to recover lost academic progress and re-establish student well-being. The statement, "Children are our most valuable natural resource," (Herbert Hoover, 31st U.S. President) has never been more pertinent to the discussion about current and future funding. While there is an opinion that increasing the BSA is the equivalent of "throwing money at a system that doesn't work", the recent introduction of the Reads Act establishes that the legislature sees the need for targeted interventions. But such initiatives cannot be integrated into schools unless the legislature acknowledges the ongoing cost of improving teacher/student ratios, professional development and required certifications for existing staff and facilities that can accommodate culturally responsive, differentiated classroom environments and appropriate interventions. Preventing the legislature from supporting much needed increases in base funding, in favor of a single limited or targeted intervention only, ignores the local solutions and resource needs of Alaska's unique communities and school district's that are rich in traditional knowledge and culture and must be supported to deliver place-based education programs in adequate facilities.

Public school funding consists of state aid, a required local contribution, and eligible federal impact aid (AS 14.17.410). The largest source of funding to Alaska's school districts is based on the state's foundation formula on a per-student basis for K-12. This foundation formula is calculated on an Adjusted Average Daily Membership (AADM) multiplied by the Base Student Allocation (BSA) to determine basic need. "Basic Need" is defined as the absolute minimum resources necessary to provide educational adequacy. With inflation rising 11.6% since 2017, according to the Alaska Consumer Price Index, school districts are operating with significantly less to cover programs that constantly increase, driven by inflation, changing markets, and automatic raises in salaries for teachers as experience is gained.

Adopted 2022
(Sunsets 2027)

CHILD ADVOCACY

3.1 DECLARING CHILDREN OF ALASKA OUR MOST VALUABLE RESOURCE AND THEIR HEALTH, SAFETY, WELFARE, AND EDUCATION IS OF PARAMOUNT IMPORTANCE

AASB understands that the children are our most valuable resource and encourages the Alaska Legislature and the Governor to declare that our children are our most valuable resource and to further declare that their mental and physical health, safety, welfare, and highest standard of education is of paramount importance.

Rationale. A declaration of this kind by the state would lend support to prevention and protective services, for all education needs and for a long-range fiscal plan for state government services. One way to draw attention to the importance of children as our most valuable resource would be to support and promote designation of a National Kids Day on August 3 of each year.

Adopted 2004
Amended 2011, 2016, 2018,
Renew 2019
(*Sunset 2024)*

3.2 PROMOTING STUDENT SUCCESS THROUGH SOCIAL AND EMOTIONAL LEARNING AND POSITIVE YOUTH DEVELOPMENT AND SUPPORT

AASB encourages each neighborhood, faith community, civic organization, community, school district, tribal entity and state agency to review the research in order to advocate, create and sustain programs of social and emotional learning and other initiatives that build assets in Alaska's children and teens, provide positive adult role models and support, and incorporate culturally responsive awareness.

Rationale. Research shows that effective schools, families, faith communities, and all adults in our communities can contribute to the positive development of youth. The difference between troubled teens and those leading healthy, productive, and positive lives, is strongly affected by the presence of what is labeled "developmental assets®." These assets are additive, meaning that the more a young person has, the better. Forty of these assets were identified – 20 exist in the student's environment and 20 belong in the head and heart of every child. These developmental assets serve as building blocks for human development in a young person's life and are developed through positive relationships with adults.

Research shows that the more assets students have the less likely they are to use drugs and alcohol, the less likely they are to be sexually active, to be depressed or have suicidal thoughts, to fail in school, and to exhibit antisocial or violent behavior. The more assets children have the more likely they are to succeed in school, to be involved in their community and to exhibit empathic and caring behaviors.

Research also shows that promoting social and emotional learning leads to reduced violence and aggression among children, higher academic achievement and an improved ability to function both in school and in the workplace. Schools that create socially and emotionally sound learning and working environments and that help students and staff develop greater social and emotional competence, in turn help ensure positive short- and long-term academic and personal outcomes for students and higher levels of teaching and work satisfaction for staff.

Adopted 1997
Amended 1998, 2002, 2003, 2006, 2007, 2008, 2009
Renewed 2017, 2022
(Sunset 2027)

3.3 FETAL ALCOHOL AND DRUG EXPOSED STUDENTS

AASB recognizes the impact of Fetal Alcohol Spectrum Disorder (FASD) and strongly recommends efforts to raise awareness of the need for prevention and appropriate intervention. AASB requests that the Alaska Legislature provide and improve effective programs and services aimed at the prevention, diagnosis and treatment of children with FASD within our state, and to allocate adequate funding to the appropriate agencies necessary to provide parent and guardian training, school staff training, paraprofessional and specialized educational services, including transportation necessary to serve children with FASD and/or who have suffered from prenatal exposure to illicit drugs. Further, AASB urges all Alaska post-secondary institutions to include FASD intervention education in their teacher preparation and paraprofessional programs.

Rationale. Prevention is the best long-term approach. The public must be educated that the use of alcohol/drugs during pregnancy may severely affect and damage children. The child who has been prenatally exposed to drugs and/or alcohol is at risk for developmental, behavioral, psychosocial and learning problems. Alaska's public schools must provide educational services to all children regardless of developmental impairment. Although Alaska has one of the highest incidence rates of children born with FASD, not all communities have the ability to diagnose this disease. Not all children with FASD meet the criteria for Special Education Programs. It is estimated that for every child born with true fetal alcohol syndrome, 10 are born with developmental delay in the context of prenatal alcohol exposure and are difficult to identify.

Children with FASD often require special instructional strategies and materials. The educational identification and service of children with Fetal Alcohol Spectrum Disorder is extremely expensive. Funding support for education of children with disabilities is already barely sufficient to meet the needs of those children currently identified.

Adopted 1997
Amended 1998, 2000, 2002, 2003, 2004, 2006, 2009, 2010, 2011, 2018
Renewed 2017
(Sunset 2023)

3.5 VIOLENCE (And Pornography) IN ELECTRONIC MEDIA AND ENTERTAINMENT

AASB supports efforts encouraging and challenging the media, entertainment and advertising industries to develop more positive content for both children and adults that demonstrate nonviolent solutions to problems and respect for human life. AASB supports efforts to provide parents with the necessary information about the influence of media in order to assist them in their decisions concerning all of its influences upon their children. AASB also supports self-regulation within the industry by asking them to post rating labels on all videos and video games rented or sold by video merchants or loaned by public libraries, and prohibiting children under age of 17 from renting R-or X-rated videos, M-rated video games or attending R-or X-rated movies without parent/guardian permission.

Rationale. It is estimated that children who regularly watch television are exposed through news and entertainment programming to tens of thousands of violent assaults and deaths by the time they reach adulthood.

Analysis of multiple victim school shootings (Anchorage Daily News, June 21, 1998) indicates a commonality of these four factors: obsession with violent pop culture, a child who felt inferior or picked on (probably suicidal), easy access to guns, and ample warning signs. Reducing the violence will not eliminate the threat, but will work in conjunction with efforts directed at addressing the other three factors.

Pornography is highly prevalent on the Internet. The Internet allows access to material all over the world with very little regulation. Innocent searches for class or personal information can occasionally lead into pornography. With rating systems in place that would post a rating scale upon a search using an Internet search engine and voluntary "black-out" with adult verification; children's access to inappropriate material will be limited.

Adopted 1997,
Amended 1998, 1999, 2001, 2003, 2004, 2005, 2007
Renewed 2017, 2022
(Sunset 2027)

3.6 OPIATES, INHALANTS, ALCOHOL, TOBACCO, E-CIGARETTES/ELECTRONIC DELIVERY SYSTEMS, METHAMPHETAMINES, MARIJUANA, DESIGNER DRUGS AND ANY ILLICIT SUBSTANCE USE

AASB calls upon the Legislature of the State of Alaska to support local communities, parents and students in their strength-based education, prevention and treatment efforts to combat opiates, inhalants, alcohol, tobacco, e-cigarettes/electronic delivery systems, methamphetamines, marijuana, designer drugs and other illicit substances and to provide effective law enforcement to ensure laws pertaining to controlled substances are enforced. AASB also requests the State of Alaska make adequate funds available for community-based and residential efforts to address effective substance use and abuse treatment programs for children, young people and their families.

Additionally, AASB supports regulations or modifications to the marijuana statute to counter potential negative impacts on Alaska youth that develops a clear and simple process for a community to implement local option laws. AASB also recommends allocating appropriately the tax revenue from marijuana sales, production and businesses to support education, prevention, and treatment programs regarding substance use and abuse, which are relevant and aligned to local community and cultural values.

Rationale: Drug-related problems, including opiate use, inhalants, alcohol, tobacco, methamphetamines and other drug abuse, are a major debilitating influence on the lives of the youth of Alaska. The abuse and prevalence of opioids has created a statewide emergency declared by Governor Walker in 2017. These addictions have been proven to be the primary contributing factor in the alarming number of dropouts, fatal overdoses and youth suicides in the State of Alaska. Community-based prevention and intervention efforts are proving effective in combating drug-related problems. The treatment of children and young people is very different from the treatment of adults for substance abuse. Communities need adequate funds for effective substance abuse prevention and treatment programs.

The current requirement by the state that substance abuse treatment programs by "evidenced-based" is often challenging for indigenous populations, as the content is often not relevant or culturally appropriate. Numerous studies have shown that culturally relevant programs are more effective and have more positive outcomes for participants.

Adopted 1997, 2017
Amended 1998, 1999, 2001, 2005, 2006, 2007, 2008, 2013, 2014, 2018, 2019
(Sunsets 2024)

3.7 COOPERATION AMONG SERVICE PROVIDERS SERVING CHILDREN

AASB supports information sharing within Federal Rights to Privacy requirements (FERPA, HIPAA, 42CFR) to ensure that children are able to come to school each day ready to learn, and to enable agencies to develop a cooperative treatment plan that involves appropriate school personnel.

Rationale. Children who receive services from social service agencies are already experiencing disruption in their lives. This disruption frequently makes it difficult for them to concentrate on their schoolwork. These students need to have educational skills to succeed in the world. Yet decisions are frequently made about the life of these children that do not take into account their educational needs.

When children are receiving services from multiple agencies, one agency will frequently have information that may be crucial to the service delivery of another agency and/or the child is receiving duplicating and sometime conflicting services from more than one agency. Addressing the needs of the whole child requires an improved delivery system, which is comprehensive, collaborative, child and family centered, and focused on prevention.

Adopted 2000
Amended 2001, 2002, 2005, 2007, 2008, 2011, 2017
Renewed 2020
(Sunset 2025)

3.8 SUICIDE PREVENTION, EDUCATION AND TREATMENT EFFORTS

AASB requests the State of Alaska to provide funding for statewide suicide prevention, education, and treatment efforts coordinated among various entities including peer helper programs, mental health centers, and local and state agencies. Initiatives should include a statewide program to bring professional mental health counselors on-site to visit schools as well as support school-based counseling programs.

Further, AASB urges school districts, tribal entities, and appropriate agencies and communities to engage in responding to this serious and ongoing challenge, through the implementation of protective factors, ensuring culturally relevant strategies.

Rationale. The Center for Disease Control and Prevention reports that suicide is the second leading cause of death among young people 15 -19 years of age, (following unintentional injuries). The rate of teenage suicide in Alaska is much greater than the national average.

Suicide is often precipitated by depression, substance abuse, harassment and intimidation and separation from a significant other. Coordinated efforts among all agencies will be better able to present programs, which address mental health, coping skills in response to stress, substance abuse, employment, and healthy relationships.

The number one protective factor in preventing youth suicide in Alaska natives is to ensure that the person has a strong sense of who they are and that their identity is reflected in the systems with which they interact. A focus on ensuring that each child's school is a place where their cultural identity is affirmed and celebrated is an important step in lowering the suicide rate in Alaska Native youth.

Currently, many Alaskan communities participate in the Community-Based Suicide Prevention Program which allows each community to determine and implement the kind of project it believes is most likely to reduce self-destructive behavior.

Adopted 1997, 2017
Amended 1998, 1999, 2002, 2005, 2006, 2007, 2010, 2015, 2019
(Sunsets 2024)

3.9 SAFE, CARING AND CONNECTED SCHOOLS

AASB recognizes the importance of positive school climate, building positive relationships**,** and student connectedness to school as powerful influences on student academic success and on reducing youth risk behaviors and urges the Legislature and state agencies to join AASB in supporting school district efforts to improve school climate and increase student connectedness to school. AASB supports efforts to provide a school environment that is free from weapons, harassment, bullying and intimidation in any form, violence, drugs (including alcohol and tobacco), and other factors that threaten the safety of students and staff while acknowledging that schools have not historically been safe for all students.

Rationale. It is common sense that when students feel safe and welcome in school where their identity is honored and are encouraged to learn, their attendance increases as well as their academic achievement. Research shows the clear association of school climate and student connectedness with positive academic outcomes and with reduced risk behavior and increased safety. AASB's School Climate and Connectedness Survey has provided a tool for districts to measure climate and connectedness factors. The survey also has provided Alaska data that aligns with national research.

Adopted 1997, 2017
Amended 1998, 1999, 2001, 2002, 2008, 2009, 2014, 2015, 2018
Renewed 2017
(Sunsets 2023)

3.10 SUPPORT OF STATE FUNDING FOR STUDENT HEALTH SERVICES IN ALASKA

AASB strongly urges the Administration and the Legislature to provide funding for school-based student health services.

Rationale. School nurses and other student health services are vitally important supports for student well-being and academic success.

Adopted 1998,
Amended *2002, 2004, 2007, 2008, 2011*
Renewed 2018
(Sunsets 2023)

3.11 HIV/AIDS AND OTHER SEXUALLY TRANSMITTED INFECTIONS (STI) EDUCATION

AASB supports providing effective HIV/AIDS and other Sexually Transmitted Infections (STI) education programs for students and parents, and training for certified and classified school staff. AASB supports an effective and comprehensive education effort that focuses on reducing risk by emphasizing abstinence, healthy decision making and refusal skills. Such instruction should also include the use of barrier methods. An effective way to do this is to bring together a broad consensus of the community in order to develop and implement the district's HIV/AIDS curriculum on preventing HIV/AIDS and other STIs.

Rationale. The impact of all Sexually Transmitted Infections s can be devastating. For instance, the dormancy of the HIV virus can be as long as 10 years and the statistics indicate that many young people are contracting the virus while in their teens. Health education should emphasize the consequences of contracting STIs, many of which are life-long. The instructions should not lull teens into careless and risky behavior.

Adopted 1997, 2017
Amended 1998, 2000, 2001, 2002, 2004, 2008, 2009, 2018
Renewed 2017
(Sunsets 2023)

3.12 EDUCATION OF STUDENTS IN RESPONSIBLE BEHAVIORS RELATING TO HUMAN SEXUALITY

AASB encourages responsible behaviors relating to human sexuality by supporting programs that promote abstinence, develop healthy decision-making skills, the importance of consent, teach refusal skills and promote prevention of pregnancy and sexually transmitted diseases.

Rationale. The Youth Risk Behavior Study of 2017 indicates a steady percentage of the number of students who reported that they had sexual intercourse at least once, approximately 37%. Since 2011 about 37 percent of high school students reported having had sexual intercourse. Overall, there has not been a continued decrease in early sexual activity nor the use of condoms to prevent sexually transmitted infections or pregnancies. This suggests a lack of effective education pertaining to responsible sexual behaviors.

Research presented by the Search Institute and their "Building Assets in Youth" model has determined that a teen's belief "in the importance of abstaining from sexual activity and his/her willingness to postpone sexual activity" is significant to their personal and academic development.

Young people often receive confusing and conflicting information about relationships and sex, as they make the transition from childhood to adulthood. This has led to an increasing demand from young people for reliable information, which prepares them for a safe, productive and fulfilling life. When delivered well, Sexual Education responds to this demand, empowering young people to make informed decisions about relationships and sexuality.

Adopted 1997
Amended 1998, 2001, 2002, 2004, 2007, 2008
Renewed 2017, 2022
(Sunsets 2027)

3.13 IN SUPPORT OF THE ALASKA CHILDREN'S TRUST

AASB fully supports the work of the Alaska Children's Trust and urges all member school boards to promote the Trust and its efforts to address the tragic consequences of abuse, neglect, violence, and crime experienced by too many of Alaska's children. AASB urges the Legislature to support and increase the Children's Trust Endowment.

Rationale. The Alaska Children's Trust was established by the Legislature in 1988 with the mandate to promote initiatives that strengthen families and serve dependent children. The Trust has since been transferred to a private, non-profit organization, and the Alaska Community Foundation manages its funds.

The goal of the Children's Trust is to promote and provide opportunities so that Alaska's children can grow to responsible and productive adulthood. The Children's Trust will fund local programs that meet the needs and challenges of Alaska's families and children with innovative, efficient and effective services.

Adopted 1996
Amended 1997, 1999, 2001, 2002, 2003, 2015,
Renewed 2016, 2021
Sunsets 2026

3.14 INCREASED SUPPORT OF ALASKA HEAD START PROGRAMS

Alaska Head Start programs and services are a partnership between federal, state and community-level entities. The Association of Alaska School Boards supports and urges the Congress of the United States, the President, the Alaska Legislature, and the Governor to provide sufficient and consistent funding to make Head Start, Early Infant Learning available to all eligible young Alaskans, regardless of the number of children in the program.

Rationale. Project Head Start has had a beneficial impact on the academic, physical, social, and emotional development of impoverished pre-school students and their families throughout Alaska and the United States since its inception in the 1960's.

Children at-risk who have benefited from a quality early childhood program spend 1.3 years less in some form of special education placement. They have been shown to score higher on such school readiness measures as verbal achievement, perceptual reasoning and social competence than other low-income children attending either another preschool or no preschool.

Head Start has immediate positive effects on children's socio-emotional development, including self-esteem, achievement, motivation and social behavior. Parents involved in Head Start have been shown to participate more in activities, including transition, than non-Head Start parents.

Within Alaska, 16 Head Start grantee agencies serve approximately 3,000 children and their families in 100 communities. A large number of eligible Alaskan children (estimated to be nearly 76%) remain unserved, due to lack of sufficient funding.

Adopted 1997, 2017
Amended 1998, 1999, 2000, 2001, 2002, 2006, 2009, 2010
Renewed 2017, 2022
(Sunsets 2027)

3.15 SUPPORTING THE SAFE AND DRUG-FREE SCHOOLS AND COMMUNITIES ACT

AASB urges the U.S. Congress to continue funding for the Safe and Drug-Free Schools and Communities Act at levels adequate to support effective education, counseling and prevention efforts. The Association recommends that such valuable new initiatives as preventing violence in the schools be funded through separate appropriation.

Rationale. The Safe and Drug-Free Schools and Communities Act authorized federal appropriations to state and local education agencies to devise programming to provide drug use education, counseling, and abuse prevention services for America's young people. Programs funded through the Act are currently providing valuable services and will be needed for the foreseeable future.

Although violence in the schools is a serious issue and developing programs to combat it is an appropriate federal responsibility, any diversion of resources from the Safe and Drug-Free Schools and Communities Act would cripple important drug education, counseling and abuse prevention programs that are only taking root and becoming effective.

Adopted 1997, 2017
Amended 1998, 2000, 2001, 2002, 2004, 2008, 2009,
Renewed 2017, 2022
(Sunsets 2027)

3.16 REVISE PARENTAL PERMISSION REQUIREMENTS FOR QUESTIONNAIRES AND SURVEYS ADMINISTERED IN PUBLIC SCHOOLS

AASB supports modifying the requirements for parental or legal guardian permission for a student to participate in a questionnaire or survey administered in a public school to make it easier for school districts to obtain the necessary permission.

Rationale. The passage of HB 44 in 2015 included an amendment requiring affirmative parental permission for most any questionnaire or survey of students by school districts. This prohibition makes it very difficult for school administrators to gather information crucial to identifying and addressing problems affecting students, from drug and alcohol use to bullying and other intimidation.

Adopted 2001,
Amended 2007, 2009, 2015
Renewed 2016, 2021
Sunsets 2026

3.17 STUDENT WELLNESS

Good physical and mental health of children is essential if they are to take full advantage of the educational services offered by their school. AASB urges students, parents, educators, guardians, community groups, tribal entities and state and local agencies to collaborate on collective ways to ensure all children are prepared to learn through healthy eating habits, physical activity, social emotional learning awareness and access to adequate housing and health care including mental health. Due to the federally mandated Child Nutrition Act, funding to school districts should be increased to support adequate school services and programs to address those mandates. Specific school-based measures to reduce child obesity issues should include increased funding and support for traditional foods for school districts.

Rationale. AASB recognizes child wellness is also determined by circumstances outside the school, from the availability of good nutrition and physical activity to the ability of each family to provide housing and health care for their members. Obesity is a growing health threat to all generations of Alaskans; it increases the risks of chronic diseases and conditions such as heart disease, liver failure, diabetes, stroke, hypertension, some cancers and premature death. Therefore, community-based collaboration is essential for long-term success.

Adopted 2005,
Amended 2006, 2008, 2009, 2015, 2018, 2020
(*Sunsets 2025)*

3.18 PROMOTING AWARENESS OF THE IMPORTANCE OF EARLY CHILDHOOD BRAIN DEVELOPMENT

AASB encourages legislative recognition that brain development in 0-3 year-old children critically impacts educational success. Inadequate brain development in the very early years is impossible to overcome and poses a huge and costly challenge for school districts. AASB supports efforts to inform parents and families about promoting healthy brain development in their very young children and to provide related resources that support early brain development efforts. AASB further urges legislators to fund early learning programs.

Rationale. Success in education is largely dependent on the degree of brain development achieved from birth to age 3. Age appropriate, culturally relevant and native language supported resources need to be made available for families to stimulate proper brain development in order to increase children's learning potential. Various public and private agencies, including school districts, should encourage collaborative efforts to provide information and effective, research-based resources to parents and guardians of very young children. The benefits of wise investment in young children will be substantial, and the consequences of poor investments costly.

Adopted 2005,
Amended 2011, 2013, 2015
Renewed 2020
(Sunsets 2025)

3.19 SCHOOL ACTIVITY AND STATEWIDE TESTING SCHEDULES IN RELATION TO MAJOR RELIGIOUS HOLIDAYS AND CULTURAL ACTIVITIES

In advocating for the respect of cultural differences and in recognition of increasing diversity, AASB encourages the State of Alaska, school districts and the Alaska School Activities Association to schedule major school-sanctioned activities and statewide testing on days that do not conflict with major religious holidays and cultural activities.

Rationale. As of this time, Christmas and Easter do not have major sporting events or other activities for students scheduled for these holidays. In its advocacy role, AASB can influence ASAA, individual school boards and the Department of Education & Early Development to refrain from scheduling student activities, sporting events and statewide testing the Jewish High Holy Days (Yom Kippur and Rosh Hashanah), holidays associated with Islam (Eid, the end of Ramadan), Russian Orthodox Christmas and Easter and other major holidays of our communities' faith organizations.

Adopted 2007, 2017
Amended 2009, 2011
Renewed 2017, 2022
(Sunsets 2027)

3.20 INTERVENTIONS AND SANCTIONS THAT REDUCE LOSS OF CREDIT

AASB supports amending AS 14.30.171 to allow school district personnel to reduce or mitigate suspensions or expulsions based on attendance and participation in appropriate interventions.

Rationale. SB 48, an act relating to recommending or refusing psychotropic drugs or certain types of evaluations or treatments for children, was adopted by the legislature in 2006. It does not currently allow school district administration to reduce the number of days for suspensions or expulsions, if there is a program or evaluation in place. The loss of credit and loss of intervention programs negatively impact communities.

Adopted 2007,
Renewed 2017, 2022
(Sunsets 2027)

3.21 SUPPORTING EXPANSION OF HEALTH INSURANCE COVERAGE TO SCHOOL-AGE CHILDREN AND THEIR FAMILIES

AASB endorses the expansion of health insurance coverage to school-age Alaska children and their families. The provision of medical benefits to these children and their families ensures more students will be able to remain healthy, focus on school and grow into productive adults.

Rationale. The federal Affordable Care Act authorized states to expand Medicaid to target lower-income families with the promise of federal funding to underwrite much of the extra expense. The State of Alaska joined many other states in taking advantage of this expanded program in 2016.

Adopted 2010,
Amended 2011, 2016, 2019
(Sunsets 2024)

3.22 STUDENT PARTICIPATION IN INTERSCHOLASTIC ACTIVITIES

AASB urges the Alaska School Activities Association, the Department of Education & Early Development and the Alaska Legislature to provide clear rules and appropriate funding to assure that all students participating in interscholastic activities adhere to the standards set forth by the state and local school districts.

Rationale. AASB believes it is in the interest of all students to adhere to consistent rules regarding transfers, academic requirements for participation, state testing, accreditation, and funding mechanisms.

Adopted 2012,
Amended 2014
Renewed 2017, 2022
(Sunsets 2027)

3.23 SUPPORT OF FULL STATE FUNDING FOR PUBLIC HEALTH REQUIREMENTS

AASB strongly urges the Administration and the Legislature to continue to sufficiently fund the Public Health Nurse Program, community health aides/practitioners and other immunization programs so that necessary and required immunizations and health screenings can be provided free of charge for all disadvantaged children and youth.

Rationale. Children are not allowed to attend school without all mandatory immunizations. Charging for these immunizations can create an insurmountable barrier for disadvantaged youth and children, as well as creating an increased severity of social and health problems caused by the rise of preventable infections and missed education opportunities due to missed immunizations. In addition, early health screenings performed by public health nurses identify health, developmental and/or other factors that may interfere with a child's learning, growth and development.

"Public Health Nurses serve populations that are marginalized by society and address differences in health status that are unnecessary, avoidable, and unjust." – Association of State and Territorial Directors of Nursing, "Report on a Public Health Nurse to Population Ratio" October 2008

"As science and medicine continue to evolve, so does our ability -- and public health responsibility -- to prevent disease. The results of some of these advancements are new vaccines. The current U.S. vaccination schedule for children between birth and six years old recommends immunizations for at least 15 different diseases that may cause significant health problems and even death. Although this number may seem like a lot, it's important to know each and every disease has the potential to quickly reappear if vaccination rates drop." – New York Department of Health website www.health.ny.gov/prevention

Adopted 2012,
Amended 2013,
Renewed 2017, 2022
(Sunsets 2027)

3.25 SUPPORTING SEX ABUSE AWARENESS AND PREVENTION EDUCATION

AASB supports the expansion and funding of age-appropriate sexual abuse and assault awareness and prevention education in grades K through 12. Passage of the Alaska Safe Children's Act of 2015 offers momentum towards this goal. The law requires schools to offer education to make children and youth aware of sexual abuse and assault, as well as dating violence and healthy relationships.

AASB also supports the prohibition of students being exempted from this education by parents/guardians, except under exceptional circumstances.

Rationale. Child abuse in Alaska is a chronic problem that spans generations. In 2013, the Office of Children's Services received nearly 2,300 allegations of child sexual abuse involving more than 1,800 unique victims. More than 800 of these cases resulted in criminal charges. While the Alaska Network on Domestic Violence and Sexual Assault offers programs that provide outreach and education presentations in schools, upon request, resources are not sufficient to address the problem. If granted support for curriculum development and materials, schools could supplement the awareness and prevention effort.

Adopted 2014
Amended 2015, 2018
Renewed 2019
(Sunsets 2024)

3.26 SUPPORTING THE ADOPTION OF TRAUMA-INFORMED AND CULTURALLY AFFIRMING PRACTICES

AASB urges its member districts to implement and educate families and the greater community on trauma-informed and culturally affirming practices, disciplinary policies, interactions and environments. The Association of Alaska School Boards understands the importance of meeting the needs of students who have experienced childhood trauma to improve student achievement and reduce behavioral deficits for all Alaskan students.

Rationale: Research shows that six of ten Alaskan students have experienced at least one traumatic childhood event before graduating. These students require a supportive environment to heal and achieve academic and social success – supports that several other states and Alaskan districts have successfully implemented. These childhood traumas, if not properly addressed, can lead to heart disease, obesity, liver and kidney disease, depression, substance abuse, suicidality, early death and numerous other serious health concerns. When students are punished or shamed for behaviors that result from their exposure to trauma, this can lead to increased risk of dropping out of school and worse job prospects. Our schools have an opportunity to help students heal and grow after traumatic experiences, but only with modifications to the current school climates, practices, and policies. Additionally, actions and activities that may be necessary to help traumatized students will benefit all students socially, emotionally, and academically.

The Association of Alaska School Boards understands the importance of meeting the needs of students who have experienced childhood trauma. As Alaskans experience adverse childhood experiences (ACEs) at rates higher than the national average, and as there are racial disparities in ACEs and the negative outcomes of ACEs in Alaska, AASB urges its member districts to implement trauma-informed and culturally relevant practices, disciplinary policies, interactions and environments.

Adopted 2017
Renewed 2022
(Sunsets 2027)

3.27 SUPPORT FOR THE TREATMENT OF ABUSE OF OPIATES

AASB advocates for appropriate legislative funding for opiate abuse treatment. AASB strongly supports both increasing resources for medication-assisted treatment within primary care as well as access to developmentally appropriate substance use disorder counseling in community settings, which may include schools.

Rationale: According to the most recent data from the Alaska Youth Risk Behavior Survey (2017) 15 percent of students in a traditional high school setting had used prescription opiates in a way not prescribed by their doctor with 7 percent reporting that they had done so in the last 30 days. The numbers from non-traditional high school are much higher, with 37.4 percent of students admitting use of prescription opiates in a way not prescribed by their doctor and 19.8 percent in the past 30 days (2015).

On February 14, 2017, Governor Bill Walker declared the opioid overdose epidemic a public health disaster emergency. In that declaration he cited statistics showing that in 2012 Alaska's prescription opioid overdose death rate was more than double the rate in the rest of the United States and the rate of heroin-associated overdose death rate was 50 percent higher than the national rate. The declaration also states that from 2009 to 2015 the number of heroin-associated deaths in the state more than quadrupled. The Alaska Legislature has extended the public health disaster declaration to February 14, 2018.

The American Academy of Pediatrics reports that the rate of nonmedical use of opioid medication by adolescents (aged 12-17) more than doubled between 1991-2012, and the rates of opioid use disorders, including heroin addiction, and fatal opioid overdoses increased in parallel.

Nationally, drug overdoses kill an estimated 142 Americans a day, more than the number of gun homicides and car crashes combined, with 2/3 of those overdoses linked to opioids, according to the Center for Disease Control.

AASB recognizes the rapid increase of opioid abuse among the student population in Alaska, following a trend in the general population in the state, constitutes a public health epidemic.

AASB also recognizes the positive steps the Alaska Legislature has taken to combat opioid overdoses and regulate the dispensing of opioid medication prescriptions. AASB advocates for legislative funding for opiate treatment options for 1) Students experiencing addiction and 2) Students who are being impacted by those who have an addiction. In many Alaska communities, treatment options are limited by professional expertise and the expense of treatment. The American Academy of Pediatrics advocates for increasing resources to improve access to medication-assisted treatment of opioid-addicted adolescents and young adults. This recommendation includes both increasing resources for medication-assisted treatment within primary care and access to developmentally appropriate substance use disorder counseling in community settings.

AASB calls on member districts to take into account the highly addictive nature of these drugs in implementing discipline and intervention programs and to recognize the need for a collaborative, multiagency approach to get a student in crisis the help they need.

Adopted 2017
Amended 2019
(Sunsets 2024)

3.28 EDUCATION ON THE DANGERS OF TOBACCO, ELECTRONIC NICOTINE DELIVERY SYSTEMS, MARIJUANA USE AND SECONDHAND SMOKE

AASB encourages the Alaska Legislature to provide education awareness funding for publications and educational awareness opportunities on the danger of secondhand smoke in regards to tobacco, electronic nicotine delivery systems, and marijuana use.

Rationale: In a recent study performed by the University of California San Francisco, the conclusion was drawn that one minute of exposure to secondhand smoke (SHS) from marijuana diminishes blood vessel function to the same extent as tobacco, but the harmful cardiovascular effects last three times longer.

The researchers (July 27, 2016, issue of the *Journal of the American Heart Association,)* found that rats exposed to marijuana SHS experienced a more than 50 percent reduction in FMD (flow-mediated dilation,) similar to the reduction in artery function seen in both rats and humans exposed to tobacco smoke in previous studies. As with tobacco, the reduction occurred after just one minute of exposure to SHS from marijuana. However, while rats exposed for one minute to tobacco SHS recover within 30 minutes – an observation that was reproduced in the new study – one minute of exposure to marijuana SHS (Secondhand Smoke) still significantly affected FMD 90 minutes after the initial exposure.

Studies have also demonstrated that exposure to tobacco smoke in childhood is associated with negative health consequences in childhood (including an increased risk for viral infection, asthma, cognitive deficits, and behavioral issues) and also with an increased risk of disease in adulthood.

Adopted 2017
Amended 2018, 2019
(Sunsets 2024)

Research Links:

https://www.ucsf.edu/news/2016/07/403721/one-minute-second-hand-marijuana-smoke-impairs-cardiovascular-function

https://drugabuse.com/lets-clear-the-air-about-secondhand-marijuana-smoke/

http://jaha.ahajournals.org/content/5/8/e004004

3.29 PROMOTING STUDENT TRANSPORTATION SAFETY PROGRAMS

AASB recognizes that our children are "Alaska's Most Valuable Resource." Accidental and preventable deaths caused by unsafe transportation practices have been plaguing the state, especially in rural school districts. AASB urges local school districts to adopt Student Transportation Safety Standards such as, but not limited to:

- Helmet use on ATV or snowmachines
- Lifejacket use on boats
- Appropriate use of seat belts and car seats
- Weather appropriate clothing for all modes of transportation
- Student choice to travel, or not, depending on weather circumstances

School districts should also consider safe travel practices and the adoption of standards for students traveling by any mode of transportation, to or from school activities.

Rationale: AASB's core resolutions currently address tobacco use, drug use, FAS, online porn and violence, HIV, sexual abuse, and suicide prevention. Addressing helmet and life jacket use, along with ground and air travel safety measures, would seem to coincide with these topics above, taking it one step further in protecting our students.

Adopted 2017,
Amended 2018
(Sunsets 2023)

3.30 SAFE AND INCLUSIVE LEARNING ENVIRONMENTS FOR LGBTQ+ STUDENTS

AASB encourages member districts, state agencies, and other decision-makers to support policies and practices that ensure safe and inclusive learning environments for LGBTQ+ students.-AASB supports districts in their efforts to protect the health and dignity of all children and youth, including transgender and nonbinary students, and to ensure equal access to educational programs.

Rationale: AASB recognizes the criticality of positive school climate on student academic success and has long held that every child deserves to go to school excited to learn in a safe and nurturing environment, without fear of bullying, violence, or discrimination.

Lesbian, gay, bisexual, transgender and queer/questioning (LGBTQ+) students are more likely than their peers to be bullied, physically assaulted and feel unsafe in school because of their real or perceived sexual orientation or gender identity. In addition, LGBTQ+ students report higher rates of isolation, depression, and suicidal ideations or attempts than their peers.

Harassment and bullying policies that specifically enumerate sexual orientation, gender identity and gender expression have been shown to be associated with decreased incidents of harassment relating to sexual orientation, increased reporting of students feeling safe at school, and increased teacher/staff intervention in harassment. AASB encourages member districts, agencies, community partners, and all decision-makers to develop and enact policies and practices that protect the health, safety, and dignity of LGBTQ+ students.

Additional:
The legal landscape defining protected classes from discrimination is evolving. Title VII of the Civil Rights Act of 1964 and Title IX of the Education Amendments of 1972 prohibit discrimination on the basis of sex. On June 15, 2020, the US Supreme Court held that discrimination on the basis of an individual's status as gay or transgender constitutes sex discrimination within the meaning of Title VII of the Civil Right Act (Bostock v. Clayton County). On June 16, 2021, the US Department of Education Office for Civil Rights issued a Notice of Interpretation affirming that discrimination against LGBTQ+ individuals is discrimination on the basis of sex under Title IX. State laws and local policies across the country are often contradictory and are changing based on court outcomes.

Adopted 2021

PERSONNEL

4.1 SUPPORTS FOR STAFF DEVELOPMENT

AASB supports funded opportunities and sufficient resources for quality and relevant staff preparation and demonstrably effective continuing development in both urban and rural settings for those educating Alaska's public school students. This includes, but is not limited to:

- Professional development for teachers to implement the Alaska State Standards;
- Pre-service: State training programs through postsecondary and other institutions;
- Expanding Department of Education & Early Development packaged training programs for all school districts to use in providing consistent mandated training to employees and in meeting the requirements of the **(**Every Student Succeeds Act 2015) Elementary and Secondary Education Act;
- Developing resources to allow the sharing and implementation of best educational practices;
- Quality in-service programs at the local district level;
- Necessary training for paraprofessionals and special needs educators.
- Promote local mentors to foster the enculturation of teachers/administrators.
- Cultural orientation and ongoing training in local language, culture and history.

Rationale. The greatest factor affecting the ability of the state's students to master Alaska's student performance standards is the quality of the teacher who delivers instruction to the student. Compounding this critical concern is the shortage of qualified teachers, administrators and paraprofessionals. Issues such as teacher, administrator and paraprofessional recruitment, distribution, preparation, and in-service continue to impact the supply and retention of qualified staff. In addition, teachers who work with indigenous students too often lack knowledge about the nuances of living in Alaska, particularly rural Alaska. While the state has recently increased efforts to attract teachers and staff from both conventional and non-traditional sources and to more effectively prepare teachers, the promise of these efforts has yet to reach most school districts.

Explicitly listing the need for both orientation and continued professional development in the areas of culture, language, and history will help districts focus on this key need for success. Teachers who understand the culture of the area in which they serve feel more connected to their students and community, provide more appropriate and culturally responsive instruction, and tend to remain in their teaching assignments longer.

Adopted 2002
Amended 2004, 2010, 2012, 2013, 2015, 2016, 2018, 2019
(Sunsets 2024)

4.3 ALASKA STATEWIDE EDUCATOR MENTORING

AASB applauds the willingness of veteran educators to serve as mentors to Alaska's teachers, administrators, and paraprofessionals. AASB urges the Alaska Legislature to provide adequate and permanent funding to continue professional staff mentoring. Mentors should also be trained to support new teachers to address implementation of the Alaska Cultural Standards, which are critical in ensuring our State's diverse population of students have access to culturally relevant instruction.

Rationale. Surveys have shown that far too many teachers and principals leave the profession within their first five years out of frustration or lack of success. Mentors who serve to provide advice and support during these critical early years are a proven remedy to this dropout phenomenon. A focus on developing culturally competent teachers will ensure teachers in rural districts develop strong relationships with their students and communities, reducing feelings of isolation, burnout and discouragement.

These points are taken from the Educators Rising Standards published by the National Education Association.

- "The imperative to cultivate a new generation of diverse, skilled practitioners is at the root of all hopes for a more equitable and competitive future for our country. Research has long indicated that, among school factors, nothing influences student achievement more than the effectiveness of one's teacher." (ERS Introduction)

Alaska should invest money in mentoring programs to ensure that they exist into the future, when federal funds may not be available.

Adopted 2005,
Amended 2008, 2010, 2012, 2014, 2015, 2018,
Amended 2020
(Sunsets 2023)

4.4 SPECIAL EDUCATION AND RELATED SERVICES TRAINING

The Association of Alaska School Boards promotes the establishment and expansion of postsecondary educational programs to train additional individuals as certified special education teachers and the initiation of programs to train related services providers (e.g. school psychologists, physical therapists, and speech therapists) within our state university system.

Academic programs to train some special education-related service providers are not currently available within Alaska. Therefore, AASB endorses providing financial support to Alaska residents who must attend-professional certification programs outside the state. This support should be limited to those professionals committed to providing services to children in Alaska public schools. In addition, AASB supports the continuation of using alternative ways towards special education certification.

Rationale. The Individuals with Disabilities Education Act Amendments of 1997 (IDEA-97) mandates appropriate educational services be provided to all certified special education students; the Assistance to States for the Education of Children with Disabilities (34 C.F.R. Part 300), Section 300.381 identifies the role of "the State (to) undertake (activities) to ensure an adequate supply of qualified personnel including special education and related services personnel...necessary to carry out the purposes of this part;" and, the Assistance to States for the Education of Children with Disabilities (34 C.F.R. Part 300), Section 300.382 identifies the role of "Each State plan (to) include a description of the procedures and activities the State will under take to ensure that all personnel necessary to carry out this part are appropriately and adequately trained...to include a system for continuing education of regular and special education and related service personnel to meet the needs of children with disabilities."

School districts throughout the State of Alaska are having difficulty meeting the educational requirements of our special needs students due to a significant shortage of certified special education personnel. Furthermore, the University of Alaska has limited special education and related services professional preparation program opportunities available to individuals aspiring to become certified special education or related service professionals.

Adopted 1998
Amended 1999, 2000, 2010, 2011
Renewed 2018
(Sunsets 2023)

4.5 ADDRESSING THE TEACHER, SPECIALIST AND ADMINISTRATOR SHORTAGE

The Association of Alaska School Boards urges the Alaska State Legislature, Alaska State Board of Education, and Teacher Education Programs in Alaska's universities to address the severe shortage of teachers, specialists, and administrators in the State of Alaska. Suggested strategies may include:

- Incentives (salary bonuses, student loan forgiveness, student loan assumption, competitive retirement benefits, student loan interest rate reduction, etc.);
- State supported marketing and licensure assistance to recruit teachers;
- Flexibility in certification requirements and reciprocity;
- Alternative routes to teacher certification;
- Improved access to technology including bandwidth and knowledgeable staff;
- Increasing availability and/or quality of teacher housing**,** including state subsidized teacher housing
- Mentoring programs for new teachers and administrators**;**
- Streamline the rehire of retired teachers and administrators;
- Professional support/development.
- Eliminate redundant or unnecessary paperwork.
- Increasing awareness about the lives and communities of Alaska's children.
- A defined benefit retirement system
- Utilize research on system supports that promote teacher retention.
- Train more Alaska students as educators
- Seek training opportunities for staff and high school students to increase the pool of qualified staff who are representative of the diverse population they teach.

Rationale. It has been painfully demonstrated that a severe shortage of teachers, specialists, and administrators is being experienced in the school districts in every region of Alaska. Attracting and retaining quality teachers has become a critical issue facing school districts as they work to improve education in Alaska's public schools.

A teacher's job satisfaction is gauged by a number of factors, including a sense of accomplishment, professional support, decent living conditions, and adequate compensation/benefits. The degree to which Alaska meets these needs is a statement of the value we place on our educators.

Adopted 1999
Amended 2000, 2001, 2005, 2008, 2010, 2011, 2013, 2015, 2017, 2018, 2019, 2020 (Sunsets 2025)

4.6 REPEAL THE SOCIAL SECURITY GOVERNMENT PENSION OFFSET AND WINDFALL ELIMINATION PROVISION FOR PUBLIC EDUCATORS

AASB supports the elimination of two little known amendments to the Social Security Act that unfairly penalize certain public employees by reducing earned retirement benefits. They are the Government Pension Offset (GPO) and the Windfall Elimination Provision (WEP).

Rationale. The Government Pension Offset and Windfall Elimination Provision unfairly reduce the Social Security rights of at least one-third of America's education workforce, including Alaskans enrolled in either the Teacher's Retirement System or the Public Employees Retirement System.

In 1977, Congress began treating government pensions, such as those earned by educators, as Social Security benefits. The Government Pension Offset (GPO) reduces an individual's Social Security survivor benefits (available to a person whose deceased spouse had earned Social Security benefits) by an amount equal to two-thirds of his/her public pension.

In 1983, Congress enacted the Windfall Elimination Provision (WEP). It changes the formula used to figure benefit amounts – reducing an individual's own Social Security benefits (earned while working in a job covered by Social Security). For example, a teacher taught 17 years in one state, then moved to a different state and taught another 14 years. According to the Social Security Administration, she earned monthly benefits of $540 per month for her contributions paid into the Social Security system while she worked in the first state. Because public employees in the second state do not participate in the Social Security system, her actual monthly benefits will be cut $196 due to the (WEP). She will receive $344 per month from Social Security instead of the $540 she earned.

Congress further tightened the law in 2004 through passage of PL 108-203, which eliminated the "last day covered employment exemption" to the government offset provision. The law requires that the last 60 months of a person's government employment be covered by Social Security and the pension system in order to avoid reduction under the GPO.

The impact of the penalty is exacerbated with the change in TRS and PRS from defined benefit to defined contribution.
Adopted 2002, 2017
Amended 2007, 2013, 2019
(Sunsets 2024)

4.7 RELATING TO DEFINED BENEFIT RETIREMENT

AASB supports establishment of a defined benefit retirement program that improves the hiring and retention of highly qualified and effective staff.

Rationale. Secure retirement benefits are important for recruiting the best personnel to Alaska schools. Without competitive work benefits, it has become increasingly difficult to retain and recruit teachers, administrators and support staff. Districts are investing significant dollars to train staff to deliver world-class instruction and want to retain this knowledge in state to the advantage of our students.

Adopted 2005
Amended 2008, 2010, 2013, 2016, 2019
(Sunsets 2024)

4.8 RELATING TO HEALTH CARE COSTS AND MEDICAL INSURANCE

AASB calls upon the Governor, the Legislature and Congress to assist school districts to address the cost of health care ~~i~~n Alaska in ways that are not detrimental to districts while providing district options.

Rationale. In Alaska more approximately 96,000 residents have no medical insurance, and the price of treatment is increasing. In the U.S. 44 million people have no health insurance. The uninsured drive costs up for everyone. For school districts in Alaska health care costs for current and retired employees is a growing problem. In many districts these costs add up to more than 10 percent of the budget. This growing budget category mitigates a districts' ability to directly impact student achievement through classroom focused expenditures.

Adopted 2005
Amended 2010, 201, 2013, 2018, 2021
(Sunsets 2023).

4.11 ALTERNATIVE PATHWAYS TO CERTIFY EFFECTIVE TEACHERS

AASB encourages the Department of Education & Early Development to develop alternative pathways for certifying teachers (a) to qualify vocational/career technology teachers to provide core academic credit; and (b) to recognize an indigenous teacher certification track that will use Native/indigenous knowledge systems and pedagogy as a base for training teachers able to more effectively teach Native students. The alternative pathways should be created with participation from both urban and rural districts.

Rationale: With the passing and implementation of the federal Every Student Succeeds Act (ESSA), the requirement for "highly qualified" teachers has been eliminated but the need for "highly effective" teachers remains. Rural school staffing patterns cannot support one teacher for each subject, let alone for each area within a discipline. In schools where one or two teachers must handle the entire secondary program, it is critically important that districts and school systems be able to utilize effective instructors that may have come through alternative pathways of certification. Alaska faces a severe shortage of Native teachers and a dearth of culturally appropriate pathways to teacher certification for teachers of any ethnicity. Research shows that Native teachers have a positive effect on and a better record of engaging Native students. The Alaska Department of Education and Early Development and Alaska colleges and universities should develop programs to support Native/indigenous teachers to become certified.

Adopted 2008
Amended 2010, 2011, 2013, 2017, 2018
(Sunsets 2023)

4.12 TEACHER ENDORSEMENTS CHANGE NOTIFICATION

AASB urges the Alaska Department of Education & Early Development to require adequate notice to school districts before teachers change their endorsements.

Rationale. Teachers assigned in April or May to teach a specific class, e.g. special education, in the fall may now drop that endorsement to their licenses before classes begin in August. Written notice to districts is required but may not be verified. The lack of adequate notice to school districts can leave schools and students without essential instructional resources. The restrictions of tenure add an additional consequence since a teacher may no longer be certified for an available position.

Adopted 2010,
Amended 2011 Renewed 2015,2020
(Sunsets 2025).

4.13 CONTINUE TO STRENGTHEN TRAINING REQUIREMENTS FOR SUPERINTENDENTS AND SUPERINTENDENT/PRINCIPALS

AASB urges the University of Alaska to continue to strengthen its curriculum and program for the education of school superintendents and superintendent/principals in order to produce more applicants who are qualified in all aspects of district administration. The curriculum and training should include:

- Extensive focus on school finance, budget development and administration; school facilities planning, design, construction and financing;
- Curriculum and instruction;
- School law;
- School board relations and policy development;
- Strategies for improving student achievement;
- Public relations and effective communications, including the judicious use of technology and social media;
- Human resources, including the recruitment, orientation, professional development and evaluation of school personnel;
- Labor relations, including collective bargaining and the administration of collective bargaining agreements.
- Cultural awareness, knowledge, and understanding of Alaska Native cultures
- Awareness, knowledge, and understanding of other cultures
- Organizational Change Management Theory
- Equity, inclusiveness and cultural responsiveness

Rationale. School districts are complex public institutions that require highly qualified leadership. There is a limited pool of these individuals that needs to be expanded.

Adopted 2013
Amended 2018, 2019
(Sunsets 2024)

4.15 URGING THE STATE OF ALASKA TO REMOVE A SUBSTANTIAL ROADBLOCK TO HIRING TEMPORARY SCHOOL SUPERINTENDENTS

AASB urges the Alaska Division of Retirement and Benefits to promulgate a rule, regulation, policy, directive or other binding determination to allow school districts to hire superintendents on a defined temporary basis without forfeiting their retirement status and without becoming active members of the Teachers Retirement System (TRS). AASB believes such relief to be in the best interest of the State of Alaska, individual school districts and parents, staff and students in affected districts. AASB believes that an adequate definition of "temporary" would include the remainder of the school year in which the superintendent is hired and up to one full school year following.

Rationale. Current state law in Alaska Statute 14.25.220 (19) and (29) specifies that "temporary" superintendents are not eligible to be active members of TRS. Yet, there is no regulation, policy, directive or other binding determination by TRS as to the terms and duration of a "temporary" superintendent.

The recruitment and selection of a superintendent by a school board is one of its most important duties and requires a thoughtful, deliberate, fair and public process. When an unanticipated vacancy occurs mid-year, the pool of potential replacements is often very limited. While school districts and the State of Alaska work on strategies to increase the pool of qualified superintendent candidates, the best immediate solution is to define the terms and duration of a temporary superintendent so that retired superintendents can re-enter the workforce to assist school districts when needed without being required to forfeit their retirement for the period of their new employment.

Adopted 2014
Renewed 2019
(Sunsets 2024)

4.16 SUPPORTING EFFECTIVE, CULTURALLY--INTEGRATED PEDAGOGY IN ALASKA

AASB urges the Alaska Department of Education and Early Development (DEED) to support and provide regionally implemented immersive cultural training and programs through: a) Alaska Studies and Cross-Cultural Communication professional development courses, b) the development of local mentor programs for teacher enculturation, and c) consultation with Alaska Native entities. Furthermore, AASB urges DEED to provide for the development of regionally and locally relevant elementary and secondary curriculum, which includes Alaska's history from the Alaska Native perspective. AASB also urges the University of Alaska College of Education (COE) to support local teacher preparation programs that grow our own teachers as well as supporting regional campuses in offering regionally-relevant Alaska Studies and Cross-Cultural Communication courses.

Rationale: The Alaska Association of Schools Boards recognizes the fact that Alaska's public schools need to provide an equitable and relevant education to all students that prioritizes social justice and advocacy. AASB recognizes the predictability of disparity in achievement based on race or ethnicity.
The first long-range goal (2015-2018) of AASB is to:

> "….empower boards to increase the academic success of Alaska Native students and increase graduation rates of Alaska Native students who are grounded in their cultural identity with the ability to successfully pursue their goals".

AASB strives to deliberately act to eliminate such gaps, policies, practices and structures that perpetuate inequities based on race and support the elimination of the factors that predict disparity. AASB recognizes that systemic changes in formal schooling need to occur in order for achievement to increase and recognizes the need for equitable delivery of education revolving around giving every student what he or she needs to achieve success (Bylaws Article 2, Section 6 and Policy 100).

AASB supports and encourages the creation of culturally responsive learning environments that support high expectations and academic achievement for learners from all racial groups. AASB supports funded opportunities and sufficient resources for quality and relevant staff including administrators (AASB 2017 Resolutions 4.1, 4.13). AASB currently collaborates with initiatives such as the Alaska Education Challenge, the newly-structured University of Alaska College of Education; the First Alaskans Institute Education Council, the Educators Rising Standards, and the Inuit Circumpolar Conference on Education in accomplishing equitable and relevant education in Alaska.

Adopted July 2017
Amended 2018
(Sunsets 2023)

4.17 ADDRESSING THE PARAPROFESSIONAL SHORTAGE

In light of the statewide shortage of paraprofessionals, the Association of Alaska School Boards encourages and urges the Alaska State Legislature and Board of Education to enact legislation and programs to fully fund the recruitment, retention, training, and development of paraprofessionals. Suggested strategies may include:

-Marketing programs aimed at recruiting and retaining paraprofessional talent;
-Development/Mentoring programs;
-Increased allocation for paraprofessionals in the funding model;
-Incentives and assistance to encourage paraprofessionals to become teachers.

Rationale. Paraprofessionals, including education support staff, bring immeasurable value to the classroom. Students with disabilities and those who need additional instruction require extra attention in order to help them understand the lesson. Paraprofessionals help teachers save valuable class time by working with these students and helping them keep pace with their peers. Without the added help, these students will fall behind. Paraprofessionals also help teachers with other classroom tasks, as well as additional tasks throughout schools such as before/after school, recess, and lunch supervision.

A shortage of paraprofessionals is being experienced in every region of Alaska, but especially in rural and remote rural districts. Recruiting and retaining quality paraprofessionals is a critical issue facing school districts as they work to improve education in Alaska's public schools. Retaining paraprofessionals will depend on a number of factors, including a sense of importance, professional support, development opportunities, and adequate compensation/benefits. The degree to which Alaska meets these factors is a statement of the value we place on our paraprofessionals.

Adopted 2018
(Sunsets 2023)

4.18 ESTABLISHING A NEW TEACHER INCENTIVE PROGRAM FOR ALASKA

AASB requests that the Alaska State Legislature establish and fund a New Teacher Incentive Program for the purpose of attracting and retaining new teachers to Alaska school districts. A sample incentive program that could include the following:

1. The requirement that a participant be a graduate from an approved teacher certification program meeting the requirements of initial certification for the State of Alaska; or
2. Meet the requirements of 14.20.022 (Subject-matter expert limited teacher certificate) and be currently enrolled in a Teacher Certification Program of no less than 12 credit hours per year directly related to the graduation requirements for a Teaching degree, certificate, or endorsement qualifying the person for a Professional Teacher Certificate or Second Initial Teacher Certificate; and
3. Have all eligible Federal student loans consolidated with a loan program that qualifies for Teacher Loan Forgiveness (FFEL) as long as that program or any substantively similar program exists; and
4. The student must make minimum payments as required to maintain eligibility for Teacher Loan Forgiveness (FFEL); shall be provided
5. A one-time relocation bonus to the new teacher and his/her family of $10,000 to the district in which they are hired; and
6. A student loan forgiveness payment of the lesser of 10% or $15,000 directly to their student loan servicer upon completion of each of their first five years of teaching in the same district; and
7. Provide a student loan forgiveness payment directly to the loan servicer of the lesser of 10% or $10,000 directly to their student loan servicer upon completion of each of their sixth, seventh, eighth, ninth, and 10th years teaching in Alaska, and
8. Payoff all remaining student loans, public or private, not to exceed $25,000 total, after the eleventh year teaching in Alaska and after the employee provides evidence that he has applied for Teacher Loan Forgiveness and met all application requirements; and
9. Providing a retention bonus of $3,000 per year, through year 10, for any qualified teacher not receiving a student loan forgiveness payment in the program; and
10. Provide an additional retention bonus of $5,000 per year for any teacher certified or endorsed in a Math or Science Subject, or in Special Education, in addition to any loan forgiveness payments or any other bonus.
11. Fund the program as a state Grant through DEED for $10 million per year ($150 million total over 15 years) with preference for State of Alaska Residents, graduates from Alaska Colleges and Universities, and members of Alaskan Federally-Recognized Tribes and Alaska Native Corporations.

Rationale. In 2020, the Bureau of Labor Statistics reported, unadjusted to cost-of-living, that Alaska was #9 in median teacher pay (Elementary Teachers, excluding Special

Education). For Comparison, California was #1, Washington State was #10, and Oregon was #12 (https://www.bls.gov/oes/current/oes252021.htm#st). Secondary teacher pay was substantively similar.

Alaska has always had challenges recruiting and retaining teachers. But as other states catch-up to and pass Alaska, it will be even harder. Alaska will likely see the impacts first in the REAA and other rural communities who have always experienced teacher shortages. The recruitment and retention of students needs to be addressed before we reach a point of crisis as Alaska teachers retire with an inadequate pipeline of new teachers to replace them.

In 2021, 83% of students had student loans and the average student loan debt at graduation was $36,140. This historic high represents an opportunity for Alaska to capture students who want to teach, are attracted to Alaska, and have a troubling amount of debt to pay-off. Additionally, by linking the first 5-years of teaching to an rural district, the benefits are targeted to benefit the rural districts first. This will enhance the ability of rural districts to recruit and retain new teachers longer, develop teachers more culturally aware and experienced with Native Alaskan cultures and communities, and eventually help all Alaska districts recruit and retain experienced Alaskan teachers. This program also has reasonable cost controls. With the average student loan debt of $36,140, this program will be a loan payoff acceleration program rather than loan forgiveness program. This is because the program requires participants to enroll in a qualified Teacher Loan Forgiveness Program and maintain minimum required payments to the lender. Therefore, these payments are in addition to student payment and not replacing student payments. This will also allow more new teachers to participate in the program over the next 15 years. However, it will also attract and retain students with extraordinary student loan debt that would have otherwise left the profession for higher potential earnings.

Finally, this program is built to give preference to REAA Teachers, Alaska Residents, Alaska college graduates, and Alaska Natives. These preferences helps those districts most at risk of recruiting and retaining new teachers but also focuses on groups most likely to remain in Alaska for their entire career. This should maximize the effectiveness of overall teacher retention in the state of Alaska.

Adopted 2021
(Sunsets 2026)

EDUCATION PROGRAMS

5.1 CAREER-EXPLORATION PROGRAMS

The Association of Alaska School Boards strongly supports adequate and equitable funding for career and technical education, career technical student organizations, and, starting at the preschool and elementary level, career-exploration activities, while ensuring resources to satisfy needs and requirements of all academic programs.

Rationale. Both the U.S. Department of Education and the Alaska Department of Education & Early Development have endorsed and encouraged districts to implement career-exploration programs starting at the elementary level.

The implementation of career-exploration programs inevitably results in additional expenses that are not part of the standard budget schedules of school districts. Increased costs include, but are not limited to: purchase of equipment and materials related to occupations, transportation for students between schools and workplaces, training for staff members, release time for staff members, new staff positions (i.e. career-exploration coordinator, transition specialist, job coach), insurance, and workman's compensation costs.

There are a large number of students in rural villages who do not complete high school or job training programs. There is a need to provide programs like the Rural Student Vocational Program (RSVP), which was eliminated in 1998, or innovative regional residency centers to enhance opportunities for these students. At the same time, career-exploration programs must integrate and ensure basic academic achievement.

Adopted 1998
Amended 1999, 2002, 2008, 2010, 2012
Renewed 2018
(Sunsets 2023)

5.2 CURRICULUM EXPANSION VIA DISTANCE DELIVERY

AASB urges the Alaska Department of Education & Early Development (DEED) and other entities to support, coordinate and encourage Alaska-sourced distance delivered education programs for students and teachers in partnership with local districts using existing facilities whenever possible, and supports funding for the purchase and installation of distance delivery equipment. AASB strongly supports the increased development of the state's Internet infrastructure to support distance delivery, thus providing equitable educational opportunities for all students.

Rationale. All school districts need to have the capability to offer a variety of courses for all students, including remedial, vocational, and college-bound students, as well as students who may have left school without graduating.

In order to take classes otherwise not available, students who attend small high schools must leave their community or take correspondence classes. There are examples in the state of success in delivering such courses utilizing technology. Many districts in the state are exploring the use of current technology in the form of distance delivery. Programs that are currently being offered in local districts could be utilized by other districts in state, or substituted for purchased programs now in use, with funding and support provided by DEED.

Expanding distance delivery could also help meet the needs of providing effective and experienced teachers and paraprofessionals.

Adopted 2000
Amended 2001, 2002, 2003, 2006, 2007, 2008, 2009, 2010, 2014, 2016, 2017
Renewed 2015, 2020
(Sunsets 2025)

5.3 ALASKA NATIVE INDIGENOUS LANGUAGE PROGRAM DEVELOPMENT

AASB supports state funding for staff training, program development and materials preparation to promote Alaska Native Indigenous language instruction for those districts that desire Alaska Native Indigenous language programs. AASB also urges Congress to clarify the Elementary and Secondary Education Act (ESEA) to bring it into compliance with the Native American Languages Act and to support opportunities for American Indian, Alaska Native, Native Hawaiian, and Pacific Islander students to retain and use indigenous languages, including adequate funding for programs that can support Alaska Native Indigenous language instruction. AASB recognizes that in order for students to become proficient in indigenous languages, we must also encourage parent engagement in the language learning process.

Rationale. The heritage languages of the Indigenous Peoples of the United States have become endangered. The extinction of languages would further erode the rich heritage of the Indigenous Peoples of the United States. The technology exists to provide satellite language instruction in the Native tongues to communities throughout the United States. If we as a nation do not respond to this need to preserve this rich linguistic heritage, these languages will become extinct. Financial support from the government for the preservation of Native languages would enable the use of a technology that has helped speed the loss of indigenous languages to reverse that trend. In today's modern world technology and global issues make it necessary for our children to become proficient in English. Learning English, however, should not be at the expense of indigenous language programs.

Adopted 1997
Amended 1998, 1999, 2004, 2008, 2010, 2018, 2021
Renewed 2017, 2022
(Sunset 2023)

5.4 COMMUNITY SCHOOL PROGRAMS

AASB recommends that a new Community Schools Act be enacted and the state explore independent funding status for Alaska's Community School programs.

Rationale. AASB recognizes that *Community School Programs* extend the concept of public education beyond the traditional K-12 program of "schooling" and views everyone in the community as both teacher and learner. Tight budgets and state demands for strict accountability have placed community schools programs in competition with district academic priorities.

Adopted 2000
Amended 2001, 2004, 2008,2009, 2019
(Sunsets 2024)

5.6 ENCOURAGING CIVIC EDUCATION IN SCHOOL DISTRICTS

AASB encourages member districts to develop well-articulated curriculum for civic education (in all contexts, including municipal, tribal, state, federal and global) for students and provide effective teaching strategies for civic instruction, including promoting meaningful student government opportunities and civic engagement at all levels.

Rationale. In HCR 6, the 25th Alaska Legislature noted that residents place a high priority on meaningful civic learning in our schools, and "it is the responsibility of each generation of Americans to teach the next generation how democracy works." Again in the 29th Alaska Legislature, this same topic was the focus of a legislative task force. Both Legislative committee reports and recommendation note the critical significance of civics education as a basis for sustaining our democracy.

While some schools in Alaska have developed excellent civics education curriculum, the legislature declared "there has been a steady decline in the attention paid to advancing civic learning opportunities, locally, statewide and nationally." AASB believes that civics content can be integrated into reading, writing and math instruction without diminishing attention to tested subjects. AASB believes civics education should be a matter for local districts, rather than a statewide mandate.

Adopted 2007
Amended 2008, 2009, 2010, 2016, 2020
Renewed 2017, 2022
(Sunsets 2025)

5.7 REQUESTING THE ALASKA DEPARTMENT OF EDUCATION AND EARLY DEVELOPMENT TO PROVIDE STANDARDS-BASED ASSESSMENTS IN ALASKA NATIVE INDIGENOUS LANGUAGES

AASB requests the state to provide standardized assessments in the Alaska Native indigenous languages, as requested by the individual districts.

- **Rationale.** Students who have a strong first language in their ethnic group perform better academically. Students who learn English as a second language with a strong first language do better academically on standardized tests. Culturally responsive curriculum that uses the local language and cultural knowledge provides the foundation for the rest of the curriculum and implements the goals of the State of Alaska's Cultural Standards, as well as the State of Alaska Content and Performance Standards. Additionally, the number of districts with Indigenous language immersion classrooms is increasing.

Adopted 2007
Amended 2015
Renewed 2017, 2022
(Sunsets 2027)

5.8 SUPPORTING REGIONAL CAREER AND TECHNICAL EDUCATION CENTERS

AASB supports funding regional career and technical education centers, both new and pre-existing, to support the goals of public education. Centers could establish partnerships with the private sector to help fund training programs leading to employment of students in a broad range of careers. This funding should also include monies for student housing.

Rationale. The existing system of funding vocational education has failed to provide appropriate vocational training opportunities in schools across the state.

Adopted 2008
Amended 2009, 2012
Renewed 2018
(Sunsets 2023)

5.9 URGING FLEXIBILITY IN TESTING TO SUPPORT INDIGENOUS LANGUAGE PROGRAMS

AASB urges the Alaska Legislature to join with school districts in opposing those aspects of the Elementary and Secondary Education Act (ESEA) that are detrimental to rural, largely Alaska Native school districts, including testing programs that inaccurately assess Alaska Native and rural Alaska students. In addition, AASB urges the state to reexamine its own testing programs with regard to these issues.

Rationale. The current ESEA reauthorization process is an opportunity to improve the existing law. Since 2001, ESEA has lacked the flexibility needed to support English Language Learners in indigenous communities. ELL programs disadvantage indigenous communities that wish to perpetuate their values, culture and traditions in their public schools through their language. ELL mandates inaccurately assess Alaska Native students and inadvertently affect language programs negatively.

Adopted 2008
Amended 2010, 2014, 2015
Renewed 2018
(Sunsets 2023)

5.10 SUPPORTING UNIVERSAL ACCESS TO EDUCATION FOR ALASKA'S 3- AND 4-YEAR-OLD LEARNERS

AASB strongly supports full implementation and funding of a voluntary education program for every 3- and 4-year-old child in Alaska, that aligns with individual districts' enrollment policies and/or deadlines.

Rationale. The foundation of cognition is established early in childhood, and research clearly demonstrates the efficacy of educational programming for 3- and 4-year-olds. Access to these programs is important for every child in Alaska.

Adopted 2008
Amended 2010, 2012
Renewed 2018
(Sunsets 2023)

5.11 ENCOURAGING DISTRICTS TO ADOPT STANDARDS FOR PARENT/FAMILY INVOLVEMENT PROGRAMS

AASB encourages the Alaska Legislature to provide funding for district efforts to develop, implement and regularly evaluate their parent involvement programs using, as models, the Alaska Standards for Culturally Responsive Schools and the National Standards for Parent/Family Involvement Programs.

Rationale. The National Standards are supported by the National School Boards Association and more than 40 other national education, health and parent involvement groups and developed by National PTA in cooperation with education and parent involvement professionals.

AASB has affirmed the importance of parent involvement in Belief Statements B.11, B.17 and B.18. The Elementary and Secondary Education Act (ESEA) also recognizes the significance of and requires effective parent involvement programs that incorporate the six National Standards for Parent/Family Involvement Programs, including communicating, parenting, student learning, volunteering, school decision-making and advocacy and collaborating with the community to engage parents, provide parents with clearly and timely information about ESEA and develop effective advocates.

Adopted 2008
Amended 2010, 2012, 2013, 2014
Renewed 2018
(Sunsets 2023)

5.12 URGING CONTINUATION OF THE ALASKA NATIVE EDUCATION ACT

AASB urges Congress and the President to support continuation of the Alaska Native Educational Equity, Support and Assistance Act as a critical way of engaging families and communities. This will more effectively support student success and align school and community efforts to create safe, healthy, culturally responsive, and opportunity-rich environments.

Rationale. Since its adoption in 2002 as Title 7 of the Elementary and Secondary Education Act (NCLB), the Alaska Native Education Act has provided supplemental benefits to Alaska school districts and Alaska Native students. Congress recognized then that too many Alaska Native children enter and leave the school system with serious educational handicaps, including low test scores and high dropout rates. The Alaska Native Education Act was enacted and funded to address these problems through improved curricula, better teaching practices, family literacy programs, cultural exchanges, community engagement programs and career preparation activities.

The Alaska Initiative for Community Engagement is a statewide initiative that effectively enlists families, school boards, districts, schools, educators, Alaska native organizations, businesses, community organizations, artists and arts organizations, faith communities, and young people themselves in improving the academic and social outcomes for youth. The success of this investment in Alaska Native students is evident in a 2009 report by the American Institutes for Research. The report on the impact of the Alaska Initiative for Community Engagement (Alaska ICE), which is funded through the Alaska Native Education Act, shows positive changes, especially for Native students, in schools and communities supported by Alaska ICE, including an increased level of expectations of Native students, improvements in school climate, increased levels of adult support for youth in the community, significantly reduced risk behaviors (including vandalism, fights, alcohol and drug use) and higher proficiency rates on statewide academic assessments.

Adopted 2009
Amended 2010, 2015, 2016
Renewed 2019
(Sunsets 2024)

5.13 RELATING TO POSTSECONDARY CLASSES FOR SECONDARY STUDENTS

AASB believes that students who are enrolled in state-funded institutions offering dual credit college post secondary and CTE classes should have the cost funded by the state.

Rationale. State law encourages students to take college credits or vocational school credits at the expense of their school districts. It is in the interest of the state to help students maintain interest in school and advance toward a college degree or vocational education certificate. Some high school students want to take college or vocational courses prior to high school graduation. Reasons vary, but oftentimes students may be ready for a greater challenge than what is currently being offered at their high school, or may wish to "try out" classes that increase college readiness before committing to a degree program. Some students seek more advanced career and technical training than what may be offered in their district. A limiting factor for many students is cost. The cost for this post-secondary education should not *be required to* be borne by school districts. Therefore, it is reasonable to ask the state to fund these courses.

Adopted 2009
Amended 2010, 2014, 2021
Renewed 2019
(Sunsets 2024)

5.15 SUPPORTING ASSESSMENTS TO MEASURE PROGRESS

AASB supports state funding to provide the full cost of equipment, technicians, network upgrades, and the broadband connectivity necessary to meet current and future mandated assessments and life-cycle replacement of hardware, software, and related technology.

Rationale. The current network capabilities of school districts should be considered in the implementation of assessments. State funding should be provided to cover the full cost of equipment, computer technicians and network upgrades to meet any mandated assessments as well as life-cycle replacement.

Adopted 2015
Amended 2016
Renewed 2020
(Sunsets 2025).

5.16 SUPPORT OF PUBLIC SCHOOL LIBRARY DEVELOPMENT GRANT PROGRAM

AASB strongly supports the Public School Library Development Grant Program and the State Board of Education and Early Development adopted regulations pertaining to Alaska State Statute 14.56.360-375, providing for annual funding for strong broadly based school library collections in support of school curriculum offerings.

Rationale. Research indicates that reading for enjoyment is important for children's education success (OECD 202); schools with new collections in their libraries have higher test scores (Illinois 2005); and student achievement is higher in schools that house larger collections of traditional print resources as well as online resources (Pennsylvania 2000).

Adopted 2012
Renewed 2017, 2022
(Sunsets 2027)

5.17 URGING THE LEGISLATURE TO CHANGE ALASKA STATE STATUTE 14.07.030 TO ALLOW FOR ELEMENTARY AGE STUDENTS WHO HAVE BEEN DISPLACED DUE TO A SCHOOL CLOSING TO BE ELIGIBLE FOR THE STATE BOARDING HOME PROGRAM.

AASB urges the Alaska Legislature to change the language of state statute AS 14.07.030 by removing the specific "secondary" student eligibility criteria to allow elementary age students who have been displaced from a community when a local school has been closed due to enrollment below 10 students to be eligible for state funding through the State Boarding Home Program. A change to this Statute will allow the Department of Education and Early Development to make necessary changes to regulation to address the needs of these displaced elementary age students.

Rationale. Many small schools in rural Alaska have been forced to close due to student enrollments falling below the state-funding minimum of 10 students. Students who remain in these villages are required to seek out and secure other educational opportunities including moving to another community in the region that continues to have a school.

The Alaska Department of Education and Early Development's boarding home program allows school districts to receive reimbursement for the stipend paid to boarding home parents of students that qualify for the program. The state has clear definitions about the eligibility of students that qualify for the boarding home program in 4 ACC 09.050.

Currently to meet the state's eligibility requirements, a student must "be a secondary student who does not have daily access to a high school by being transported a reasonable distance."

The boarding home program currently provides a stipend to host parents to assist with the costs related to the education and housing of a boarding home student. The boarding home program also provides or reimburses the cost of transportation for one-round trip airfare from the student's home village to the in-district village in which they are attending high school.

With the closure of rural small schools, needs have arisen for parents of elementary age students to seek out alternative educational placements for their children. Presently, students from closed elementary schools whose families have remained in their home community have enrolled students in another community's elementary school, but those students do not qualify for the State Boarding Home Program. This causes an added financial burden on both the parent(s) and the host family to meet the student's travel, food and lodging needs.

Adopted 2012
Renewed 2017, 2022
(Sunsets 2027)

5.19 SUPPORTING AUTHENTIC ASSESSMENTS

AASB strongly supports districts that are undertaking efforts to develop and implement authentic assessments and asks that the state recognize these as legitimate alternative ways of accurately assessing student learning.

Rationale. An authentic assessment is defined as "an assessment composed of performance tasks and activities designed to simulate or replicate important real-world challenges" wherein students are asked "to use knowledge in real-word ways, with genuine purposes, audiences, and situational variables." (Wiggins and McTighe, 2005). State and federally mandated assessments do not take into account the "distinctive social organizations, linguistic patterns, cognitive styles, motivations and values of the local community" (Demmert, et al, 2006) severely limiting the ways in which Native students in particular demonstrate learning. The creation of district level authentic assessments directly tied to pedagogy compatible with Native epistemological philosophies provides for a wider repertoire of assessments by which students validate learning. By supporting the efforts for districts to develop authentic assessments, AASB can facilitate the empowerment of boards to increase the academic success and increase the graduation rates of all students, including Alaska Native students who are grounded in their cultural identity, with the ability to successfully pursue their goals.

Adopted 2015
Renewed 2020
(Sunsets 2025).

5.20 SUPPORTING RANDOM OR WEIGHTED LOTTERIES FOR CHARTER SCHOOL PROGRAMS

AASB urges the Legislature to authorize a change in statute regarding the charter school(s) lottery process, to allow use of either a random lottery or weighted lottery for low academically performing and/or low-income students, when approved by the local school board and/or Alaska Board of Education.

Rationale. Current law allows charter school applicants and districts to target low academically performing students in their enrollment outreach. However, when implementing the lottery, state statute requires a random lottery. This can be in conflict with the goal of serving a larger percentage of low academic performing students or a larger percentage of low socio-economic students. This statute change may allow districts to implement a weighted lottery for low academically performing or low-income students to serve students they feel will most benefit in a charter school(s). Typically students of higher socio-economic families apply to charter schools, so a random lottery will be highly unlikely to reach the target group of students desired.

Adopted 2016
Renewed 2021
(Sunsets 2026)

5.21 SUPPORTING THE ALASKA PERFORMANCE SCHOLARSHIP (APS)

AASB urges support for the Alaska Performance Scholarship for our high school students.

Rationale. APS has been successful in that more of our high school students are taking a rigorous course load in order to be eligible for the scholarship and after entering college take fewer remedial, or developmental, coursework, according to statistics compiled by the Alaska Postsecondary Commission. The recipients of APS also accumulated credits at a faster pace than non-recipients and were nearly twice as likely to continue their college attendance, the commission reported in its latest report..

Adopted 2016
Renewed 2021
(Sunsets 2026).

5.22 SUPPORTING CTE CREDITS FOR THE ALASKA PERFORMANCE SCHOLARSHIP

AASB urges support to allow students to substitute up to two units of Career Technical Education (CTE) classes to count as requirements towards the two to four year college awards levels for the Alaska Performance Scholarship.

Rationale. Career technical education classes are often not selected due to the fact that they do not count toward the APS award if planning to go to two to four year colleges in our State. CTE classes only count towards our technical schools. CTE classes are desired by many students in exploring careers and options and are relevant and engaging in keeping students in high school.

Adopted 2016
Renewed 2021
(Sunsets 2026)

5.23 SUPPORTING INNOVATION, COLLABORATION, AND TRIBAL COMPACTING TO IMPROVE STUDENT ACHIEVEMENT FOR ALL ALASKAN STUDENTS

AASB urges stakeholders to be innovative in their thinking and to support efforts to collaboratively change practices and address barriers to implement new ways of teaching and learning in culturally responsive ways. AASB supports the creation of tribal compacting as a public education option for the students of Alaska. AASB wishes to serve as a voice for school boards and a resource for tribes and agencies as this process proceeds **as requested. AASB recognizes, respects and honors the inherent sovereignty of Alaska's tribal governments, as defined by federal law.**

Rationale: The current education system in Alaska does not serve all students equitably and many of our youth do not reach their full potential. **AASB recognizes the federal government and State of Alaska acknowledges Tribes as sovereign government.**As an ardent supporter of local control of public education, AASB recognizes and acknowledges that tribal compacting is a form of local control.

While local school boards and their districts will not be directly involved as an entity within the negotiated compact among the State of Alaska, the Federal Government, and a tribe, school boards must remain informed and aware of the process and results. AASB can keep member districts informed on compacting issues and provide comments when appropriate and requested. AASB has a long history and extensive experience with school system governance that could be useful. AASB also desires to become better educated about tribal governance systems and develop a clearer understanding of how it may serve tribal compacted schools in the future.

Only through collaboration, partnership, and the willingness to be innovative can we hope to transform education to serve all students. Innovation and transformative change will take effort and participation by all stakeholders, such as in the Alaska Department of Education and Early Development's "Alaska's Education Challenge." It will require all levels of policymakers and stakeholders (*State Legislature, Governor, Municipalities, Tribal entities, School Board members, Superintendent Association, NEA, education groups, families, and others*) working towards a clear, well-articulated goal of providing an excellent education for every child every day, to truly fulfill the expectations of our constitutionally mandated education system.

Adopted 2017
Renewed 2022
(Sunsets 2027)

5.24 RECOGNIZING THE VALUABLE EDUCATIONAL OPPORTUNITIES THE ANNUAL ELDERS & YOUTH CONFERENCE AND AFN CONVENTION PROVIDES STUDENTS

The Association of Alaska School Board supports school boards recognizing the annual Elders & Youth Conference and the Alaska Federation of Native (AFN) Convention as valuable and educational opportunities for Alaska's youth, and students should be encouraged and supported to participate in these events.

Rationale: The First Alaskans Institute Elders & Youth Conference is the largest statewide convening of Alaska Native Elders and Youth, representing all Alaska Native culture and language groups. The purpose of the conference is to connect Elders and youth for cultural learning and knowledge transmission, to bring people together to form and nurture statewide relationships, empower the voice of participants as leaders, and put forward solutions to challenges faced by the participants and their home communities in order to enhance, strengthen, and perpetuate the unique spirits and identities of Alaska Native peoples. When school districts penalize youth, who attend the annual Elders & Youth conference and AFN Convention by counting their participation against the student's maximum allowable absences, it hinders students' abilities to participate in these important conversations. Students should be encouraged, rather than discouraged, to participate in the Elders and Youth Conference and AFN Convention.

Adopted 2017,
Amended 2019
(Sunsets 2024)

5.25 EDUCATION OF GIFTED AND TALENTED STUDENTS

AASB supports strong gifted and talented programs in the state's elementary and secondary schools. AASB recognizes that gifted and talented students comprise a subset of learners who need additional challenges and strategies for involvement in the classroom or risk underachievement. While the Department of Education and Early Development requires a district education program for gifted children to be in place for Alaska school districts, there is a limited accountability and no funding allocated to ensure the success of the program. This constitutes an unfunded mandate on school districts.

Rationale: Alaska Administrative Code 4 AAC 52.800 mandates that each school district will administer an appropriate educational program for gifted children enrolled in its schools. The program must have a process to develop a student-learning plan for each identified gifted student. The student-learning plan is to incorporate the participation of teachers, parents and the student. These plans will by their nature require additional resources or time for their creation and execution. However, no consideration for the additional time, training or resources is calculated into district funding. This de-emphasis of the importance identifying and engaging gifted and talented students can mean that these programs are given a minimum amount of consideration and students who fall into this category continue to be at risk of classroom underachievement and dropout.

Adopted 201,
Amended 2019
(Sunsets 2024)

5.26 REQUEST FOR AN ALASKA DEED GRADUATION SUCCESS PROGRAM FOR STUDENTS AGES 19-21

AASB strongly urges legislative action for Alaska Department of Education to take a systematic approach to dropout recovery by expanding the funding for one additional year to school districts serving eligible students, aged 19-21.

Rationale: It is the responsibility of the State of Alaska to provide for the education of its students in a manner that enables them to be college and career-ready upon graduation and the State of Alaska has one of the highest student dropout rates in the country. Alaska's high school dropouts face fewer prospects for employment, significantly lower earning potential, higher rates of incarceration, and are far more likely to rely on public assistance than high school graduates. Failure to fully educate the next generation of workers and leaders has substantial long-term consequences for our shared economic well-being. The State of Alaska needs a systemic approach to address dropout recovery and to re-engage students who have already left school. The State of Alaska needs to implement active dropout recovery efforts to include identification, outreach, support, and alternative pathways to graduation**.** Re-enrolling in a traditional high school is always an option, the majority of returning students now request alternative education high schools or programs allowing for individualization and flexible scheduling.

Adopted 2017
Renewed 2022
(Sunsets 2027)

5.27 IN SUPPORT OF ARTS EDUCATION

AASB supports a systemic and rigorous arts education for all students. AASB urges member districts and education agencies to prioritize artistic literacy and implement sequential, standards-based arts curriculum, employ arts specialists whenever possible, and provide professional development in arts disciplines and arts integration for educators. AASB encourages member districts and education agencies to leverage the expertise and resources of community partners in order to improve access, equity, and quality of arts education for all students.

Rationale. The Every Student Succeeds Act (ESSA) recognizes the arts in the definition of a "well-rounded and comprehensive education that all American students deserve," including arts disciplines as subject areas eligible for Title I funds and other federal resources administered by state and local education agencies. A robust arts education teaches youth the skills necessary to succeed in life including problem-solving, creative thinking, self-discipline, and public speaking. The US Department of Education's ten-year review of Arts in Education-funded programs finds that "students in arts programming had better attendance, fewer disciplinary issues, and improved on-task behavior relative to comparison students,"(1) and data from the College Board showed that in 2015, students who took four years of arts and music classes while in high school scored an average of 92 points higher on their SATs than students who took only one-half year or less (2).

The Alaska State Board of Education adopted the Alaska Arts Standards in 2016, which were followed by grade-level performance standards developed by Alaskan educators in Music, Visual Arts, Dance, Theatre, and Media Arts. Importantly, school districts around Alaska are pioneering creative and collaborative approaches to arts integration as a teaching strategy, culturally relevant arts teaching practices, and arts learning for educators. Arts teaching and learning strategies that integrate local and regional artistic traditions and Alaska Native cultural practices can positively impact student achievement. These state initiatives for arts education development and implementation are critical to efforts to better meet the needs of Alaska students.

Adopted 2018
(Sunsets 2023)

1) U.S. Department of Education. (2012). Progress and Promise: Ten Years of the Arts Education Model Development and Dissemination Program. (p. 13)
2) The College Board. 2015 College-Bound Seniors: Total Group Profile Report.

5.28 SUPPORTING THE PRESERVATION AND RESTORATION OF ALASKA NATIVE INDIGENOUS LANGUAGES

In recognition of the linguistic emergency for the twenty-one surviving Alaska Native Indigenous languages declared on September 23, 2018 in Administrative Order No. 300, AASB urges support from the Alaska Legislature, the Alaska Department of Education and Early Development and all accredited higher education systems.

AASB urges the Alaska Legislature to support local school districts in their efforts to integrate Alaska Native Indigenous languages across all age levels through additional, targeted funding allocations. This funding will support the development of curriculum, as well as the training, certification and hiring of qualified, fluent Alaska Native Indigenous language educators.

AASB urges the Alaska Department of Education and Early Development to review its policies regarding requirements to provide support and encouragement to Alaska Indigenous Natives to seek Type M Certificates, and form community partnerships in the developmental process for Type M Portable certification in Alaska Native Indigenous languages.

AASB encourages all accredited higher education systems to reinvigorate and expand its programs in all Alaska Native Indigenous languages. These programs are instrumental in the preservation of our state's indigenous languages.

Rationale: As stated in Belief Statement B.11, AASB honors and celebrates the rich cultural, ethnic and linguistic heritage of Alaska Native people and supports the preservation and restoration of indigenous languages across the state.

Alaska Native Indigenous languages have been lost over many years of English-only instruction in our schools. It is incumbent upon our school systems to help restore this loss. The addition of targeted funding for schools in response to this emergency is critical in restoring and stopping the loss of Alaska Native Indigenous languages.

In many regions of the state, the most qualified instructor candidates for Alaska Native Indigenous languages are often elders and are barred from full teacher certification due to a lack of instruction in areas such as upper level mathematics and English, areas that are irrelevant to the subject matter. When the speakers of a language possessing the greatest knowledge of its vocabulary and most understanding of its nuances are barred from becoming instructors by regulations created for instruction in another language, it is appropriate to review and update those regulations.

University programs, such as the Alaska Native Language Center, are critical in the preparation of language instructors and supporting the development of curriculum and program.

Adopted 2018
(Sunsets 2023)

5.29 URGING A STATEWIDE ANNUAL ALASKA INDIGENOUS LANGUAGE CONFERENCE

AASB urges the Governor of Alaska, the State Legislature and the State Board of Education to provide an annual Alaska Indigenous Language Conference that will benefit indigenous Alaskan languages.

Rationale: The State of Alaska signed House Bill 216, October 23, 2014, twenty Alaska Native languages as official languages for the State of Alaska. The Governor of Alaska, September 23, 2018 declared an emergency for Alaska Native languages. Alaska Indigenous Language instructional staff do not have a venue where they can interact and collaborate with fellow language and cultural Instructors from across the State. An Alaska Indigenous Language Statewide Conference would provide that opportunity.

Adopted 2018,
Amended 2020
(Sunsets 2025)

5.30 REQUESTING A THOROUGH ANALYSIS OF THE STATEWIDE TESTING AND ACCOUNTABILITY SYSTEM

AASB calls upon the State of Alaska to undertake a thorough analysis of the statewide testing and accountability system to ensure an accurate, relevant, and authentic assessment of student learning.

Rationale: While assessments are a critical component of the teaching and learning process both to inform instruction and to ascertain student levels of skill and knowledge, it is imperative the information be accurate, authentic, and relevant. Given the statewide assessment scores are used to label students and rank schools and are referenced in budget discussions, it is critical the information be correct and not misinterpreted. The community is an important voice in advocating for sound accountability.

Adopted 2019
(Sunset 2024)

5.31 ALASKA STANDARDS FOR CULTURALLY RESPONSIVE SCHOOLS

AASB supports the implementation of the Alaska Standards for Culturally Responsive Schools.

Rationale: The State of Alaska Board of Education adopted the ASCRS in 1998. Cultural standards serve as a complement to content standards. Content standards stipulate what students should know and be able to do, cultural standards provide guidance on how to engage students in learning through the local culture. We recognize all forms of knowledge, ways of knowing, and world views as equally valid, adaptable, and complementary to one another in mutually beneficial ways. These cultural standards are not intended to be inclusive, exclusive, or conclusive, and should be reviewed and adapted to fit local needs. (https://education.alaska.gov/standards/cultural)

A firm grounding in the culture indigenous to a particular place is a fundamental prerequisite for the development of culturally-healthy students and communities associated with that place, and thus is an essential ingredient for identifying the appropriate qualities and practices associated with culturally responsive educators, curriculum and schools. (p2, ASCRS)

Adopted 2020
(Sunsets 2025)

5.32 ALASKA HISTORY TEXTBOOK

AASB requests that the Alaska Legislature support the production of a printed and/or digital textbook on the history of Alaska, co-authored by western and Alaska Native scholars, for statewide use in public schools.

Rationale: High school graduation from public schools in Alaska currently requires successful completion of a 1/2 credit (one semester) course in Alaska history, which students may satisfy by demonstrating mastery of the state standards. While the state standards describe the required content of the course, source materials are left to the discretion of the teachers and students. A standard textbook that presents the western and Alaska Native perspectives on an equal footing would serve to promote a more deeply shared understanding of the salient events and interactions that affected the development and influenced the multiple cultures of our state. This would foster mutual understanding across our diverse cultures and strengthen civic engagement across the state.

Adopted 2020
(Sunsets 2025)

5.33 RESTORING THE ALASKA LEARNING NETWORK (AKLN)

AASB requests that the Alaska State Legislature re-establish the Alaska Learning Network (AKLN) and fund it to the FY 2017 funding level plus inflation, at a minimum, for the purpose of allowing districts to share course offerings and provide individual students with opportunities to take courses not offered or accessible at their school.

Rationale: Many districts have been forced to reduce class offerings. This has impacted all subjects, but especially electives in the areas of Social Studies, Foreign Language, and Art. The consolidation of course offerings also creates issues for individual students who may need to take specific courses but cannot due to a scheduling conflict in their school.

Allowing districts to share courses can improve the efficiency of education delivery across districts and expand public education course opportunities for students.

Adopted 2021
(Sunsets 2026)

5.34 SUPPORT FOR ESSA PRIORITIES

AASB supports racial and socioeconomic equity in education, raising the levels of achievement of all students, particularly those at the lower levels of performance, and eliminating the racial and socioeconomic predictability and disproportionality of achievement. AASB fully supports the proposed priorities for American History and Civics programs authorized by ESSA**,** including culturally responsive teaching and teaching about institutional and systemic racism.

RATIONALE

AASB supports school districts that aim to identify and address disparities among cohorts of students and identify district roles in erasing them. AASB acknowledges that the historic and persistent achievement gap between ethnic and socioeconomic subgroups of students is unacceptable, and also acknowledges the fact that responsibilities for disparities among young people rest with adults, and that districts must address and overcome inequities including institutional racism to provide all students with the support and opportunity to succeed.

Because authentic multicultural education is grounded in the lives of students; draws on the voices of those being studied; critically supports students' identities; critiques curriculum content; invites students to engage in real issues; and explores how social and economic institutions have contributed to inequality (Wayne Au, 2009); it provides a path for success for all students.

The State of Alaska Board of Education adopted the Alaska Standards for Culturally Responsive Schools in 1998. A firm grounding in the culture indigenous to a particular place is a fundamental prerequisite for the development of culturally-healthy students and communities associated with that place, and thus is an essential ingredient for identifying the appropriate qualities and practices associated with culturally responsive educators, curriculum and schools. (p2, ASCRS)

Adopted 2021
(Sunsets 2026)

5.35 Creating Comprehensive Support for Families and Students to Navigate College and Career Training Opportunities

AASB encourages the creation of comprehensive family and student-centered navigation supports and systems to help all students access college and career training opportunities that will help meet the State's current and future workforce needs and launch students into success after high school.

Rationale: Alaska's workforce needs are growing, but many recent high school graduates are not pursuing the postsecondary education needed to be prepared to fill job openings and important community roles. Research shows that helping students understand their motivation and passion can help youth prepare for and engage in the workforce.

Pilot programs in Alaska that provide personal navigation support with dedicated, well-trained, and supported career guides have demonstrated a significant increase in the percentage of high school graduates who pursued some type of degree, certification, or military training. Also, participants in these pilot programs in Alaska completed the FAFSA at rates that, if applied statewide, could grant Alaskan students access to an additional $15 million or more in federal aid each year.

Alaska's best opportunity to meet the workforce needs of tomorrow is to help Alaskan students connect with the postsecondary opportunities they need to be ready.

Adopted 2022
(Sunsets 2027)

MEMORANDUM # 23-22

TITLE: CARL ROSE GOVERNANCE AWARD

DATE: September 14, 2023

BACKGROUND: Mrs. Gail Evanoff has been requested for nomination by our Board President, Charlene Arneson. After many years on the CSD board, Gail has proven herself to be an excellent candidate for this award.

SUPERINTENDENT RECOMMENDATION: It is recommended the Chugach School Board approve Memo #23-22 which nominates Gail Evanoff for the Carl Rose Governance Award for her outstanding contributions to Chugach School District.

SCHOOL BOARD VOTE:

Memorandum 23-22 passed/didn't pass by the Chugach School Board this 14th day of September, 2023.

Board Member	Approve/ Yea	Reject/ Nea	Abstain	Not Present
Charlene Arneson				
Deserae Stellwag				
Wayne Shen				
David Totemoff				
Gail Evanoff				

Attested By: _____ Date 9/14/23
Serena Jackson

Title: Chugach School Board Secretary

AASB POLICY REFERENCE MANUAL UPDATE SERVICE

Fall 2023 UPDATE

INSTRUCTION SHEET

NOTE: This packet includes only those policy manual pages that have been revised, deleted or newly established. Full text pages are included and are to be substituted as indicated below.

For ease of School Boards, AASB has identified those portions of the Update that require formal Board action in order to implement the policy changes. This is indicated by a "Yes" or "No." A "No" is used if changes have been made only to an AR or an Exhibit, or if policy changes are limited to explanatory notes, legal reference or cross-reference updates, or minor grammatical or stylistic changes that have not changed the policy meaning.

REPLACE/ADD	FORMAL ADOPTION REQUIRED	DESCRIPTION
ARTICLE 3, Series 3000 – Business and Noninstructional Operations		
AR 3310	No	This update adds additional best practices for purchasing requisitions and purchase orders, specifically addressing best value conditions and records procedures.
BP 3311	Yes	This update includes a list of items that are exempt from normal purchasing procedures. Items on this list may be removed (and be subject to normal purchasing procedures) at a Board's discretion.
BP 3312	Yes	This update includes a provision that states an agreement or a contract may not be enforced by a district unless it was validly entered into under District policy. It also requires that the Superintendent or designee sign all contract entered into by the District.
BP 3270	Yes	This update provides that surplus equipment purchased with a federal fund in the amount of $5,000 or greater must be disposed of in accordance with federal Uniform Administrative Requirements.

REPLACE/ADD	FORMAL ADOPTION REQUIRED	DESCRIPTION
ARTICLE 5, Series 5000 – Students		
BP/AR 5124.1	Yes	*New Board Policy and Administrative Regulation* This new board policy and administrative regulation address family engagement and efforts districts should take to coordinate with parents. The policy and regulation are broad based and may be edited based on specific district need.
BP 5131.9	Yes	This update is a substantial revision to the model academic honesty policy, incorporating modern best practices and addressing the use of artificial intelligence programs.
AR 5131.9	No	*New Administrative Regulation* This new regulation further expands on the revised academic honesty policy. It includes definitions, provides examples of academic dishonesty, applies investigation roles, and further addresses artificial intelligence use.
AR 5040	No	This update removes references to exhibits that are not attached to the AR.
BR/AR 5141.43	Yes	*New Board Policy and Administrative Regulation* This policy establishes a model investigative policy for professional boundaries violations. It does not supersede current investigatory procedures, but provides best practices when conducting investigations under various existing policies. The new AR further develops best practices for conducting investigations set forth in the model investigations policy.

REPLACE/ADD	FORMAL ADOPTION REQUIRED	DESCRIPTION
ARTICLE 6, Series 6000 – Instruction		
BP 6010	No	This update removes a reference to a withdrawn state regulation that required districts to set target graduation and attendance rates.
BP 6112	Yes	This updates includes a new provision that requires a kindergarten day in session to include at least two hours of instruction.
BP 6147	Yes	*New Policy* This policy implements the reading intervention plans required by the new Alaska Reads Act. It addresses what must be included in the intervention program, individual reading plans, notification requirements, and progression goals.
BP 6148	Yes	*New Policy* This policy implement the early education grant program under the Alaska Reads Act. It sets forth the compliance requirements for a district that opts for an early education grant under the Alaska Reads Act.
ARTICLE 9, Series 9000 – Bylaws of the Board		
BB 9200	Yes	This bylaw adds further clarity to how complaints brought to the board should be addressed, and requires board approval for legal opinions.

BIDS BP 3311(a)

The district shall purchase equipment, supplies and services on a competitive bidding basis when required by law and whenever it appears to be in the best interest of the district to do so. The Superintendent or designee shall establish procedures to implement these requirements. Prior to any purchase, the District should review the federal funding award or grant to determine if it requires compliance with OMB's procurement procedures.

Purchases Made Under Federal OMB Funding Awards

All bids under federal awards must be made in accordance with the standards set forth in 2 CFR 200.320, set forth below. One of the following five methods of procurement shall be used for each purchase under a federal award:

1. Micro-purchases: Less than $3,000 ($2,000 for purchases subject to the Davis-Bacon Act)
    a. No competitive quotes required
    b. Purchases should be spread among qualified suppliers
2. Small Purchases: Between $3,000 and $150,000
    a. Rate quotes must be obtained from an adequate number of qualified sources
    b. Quotes can be obtained from suppliers or from public websites
3. Sealed bids: Purchases more than $150,000
    a. Two or more qualified bidders are required
    b. Bids must be publicly advertised and solicited from adequate suppliers
    c. Lowest bidder for the fixed price contract with specific requirements shall be awarded the contract
4. Competitive Proposals: Purchases more than $150,000
    a. A written policy must be adopted for conducting technical evaluations of reviewing proposals and selecting the recipient
5. Sole Source: Purchases of any amount that meet one of the following four requirements
    a. Good/service is only available from a single source
    b. Only one source can provide the good/service in the time frame required
    c. Written pre-approval from the Federal awarding agency
    d. Competition is deemed inadequate, after solicitation attempts through one of the other methods

To ensure that good value is received for funds expended, specifications shall be carefully designed and shall describe in detail the quality, delivery and service required.

Minority Bidding

When procuring contracts under federal awards set forth in 2 CFR 200.320, the District must take affirmative steps to utilize minority businesses, women's business enterprises, and labor surplus area firms when possible. Affirmative steps must include:

(1) Placing qualified small and minority businesses and women's business enterprises on solicitation lists;
(2) Assuring that small and minority businesses, and women's business enterprises are solicited whenever they are potential sources;
(3) Dividing total requirements, when economically feasible, into smaller tasks or quantities to permit maximum participation by small and minority businesses, and women's business enterprises;
(4) Establishing delivery schedules, where the requirement permits, which encourage participation by small and minority businesses, and women's business enterprises;
(5) Using the services and assistance, as appropriate, of such organizations as the Small Business Administration and the Minority Business Development Agency of the Department of Commerce; and
(6) Requiring the prime contractor, if subcontracts are to be let, to take the affirmative steps listed in paragraphs (1) through (5) of this section.

Exemptions

The following items are exempted from formal purchasing procedures:

A. Instructional materials for which purchasing guidelines have been established by School Board Policy in BP 6161.1(a); or
B. In-service presenters, speakers, or curriculum, instruction, or staff development experts selected for particular and unique expertise; or
C. Professional or consultant services such as medical, legal, negotiation, technical, or educational, not including architectural/engineering design services; or
D. Professional or consultant services (such as property and casualty insurance) purchased jointly with Local, State, or Federal agencies; or
E. Public services, utilities or energy-related expenses, site licenses, upgrades, maintenance contracts, and specialized services, software, or equipment where no competition exists (single source) or the District has established a need for standardization of equipment, supplies, or services; or
F. Emergency supplies or supplies and equipment that augment previously purchased items of a similar nature whereby the District would incur substantial costs to switch products or product lines; or
G. Purchases involving replacement of equipment where similar equipment is being traded in; or
H. Purchases involving items regulated by Fair Trade Statutes; or

BIDS (continued) BP 3311(c)

I. Purchases made through cooperative purchasing agreements, existing Federal/State or inter-district contracts including GSA pricing; or when cooperatively bidding with other public agencies; or

J. Contracts or purchases when time is of the essence for reasons of health or safety, or to comply with legal requirements in a timely manner.

K. Proprietary (sole-source) items or services or items that are only available from a single source.

When applicable, prior to any purchase, the District should review the federal funding award or grant to determine if it requires compliance with Uniform Guidance OMB's procurement procedures.

(cf. 9270 - Conflict of Interest)
(cf. 4030 - Nondiscrimination in Employment)
(e. 3310 – Purchasing Procedures, Procurement)

Legal Reference:

ALASKA STATUTES
14.14.060 Relationship between borough school district and borough
14.14.060(h) Procurement of supplies and equipment
14.14.065 Relationship between city school district and city
14.03.085 Procurement preference for recycled Alaska products
29.71.050 Procurement preferences for recycled Alaska products
35.15 Construction Procedures
36.15.020 Use of local agricultural and fisheries products required in purchases with state money

ALASKA ADMINISTRATIVE CODE
4 AAC 27.085 Competitive pupil transportation proposals
4 AAC 31.080 Construction and acquisition of public school facilities

CODE OF FEDERAL REGULATIONS
2 C.F.R. 200.317-326, Procurement Standards

FAIRBANKS NORTH STAR BOROUGH SCHOOL DISTRICT v. BOWERS, 851 P.2d 56 (Alaska 1992)

Revised 9/2023

CONTRACTS BP 3312

The Superintendent or designee may enter into contracts on behalf of the district. All contracts must be approved or ratified by the School Board.

(cf. 3300 - Expenditures/Expending Authority)

Contracts between the district and outside agencies shall conform to standards required by law and shall be prepared under the direction of the Superintendent or designee. Contracts, where appropriate, shall be submitted to the legal advisor of the district for review and approval.

A contract for professional and technical services or other purchases services or any amendment to a professional and technical services or other purchased services contract may not be enforced against the District unless its terms have been approved in accordance with Board Policy and Administrative Regulations and unless the contract or amendment(s) to the contract has been verified in writing that there are sufficient funds for the term of the contract.

All contracts, leases, and agreements shall be signed by the Superintendent or designee. The District shall execute all contracts, leases, and agreements.

The district shall not enter into any contract with a person, agency, or organization if it has knowledge that such person, agency or organization discriminates on the basis of race, color, creed, sex, religion, ancestry, national origin, age or non job-related handicap or disability, either in employment practices or in the provision of benefits or services to students or employees.

(cf. 0410 - Nondiscrimination in District Programs and Activities)

Legal Reference:

ALASKA STATUTES
14.08.101 Powers

ALASKA ADMINISTRATIVE CODE
4 AAC 27.085 Competitive pupil transportation proposals
4 AAC 27.100 Contractor's duties
4 AAC 31.065 Selection of designers and construction managers
4 AAC 31.080 Construction and acquisition of public school facilities

CODE OF FEDERAL REGULATIONS
2 C.F.R. 200.317-326, Procurement Standards

Revised 9/2023

SALE AND DISPOSAL OF BOOKS, EQUIPMENT AND SUPPLIES (Personal Property) BP 3270

Note: Borough and city districts should check city and borough ordinances for requirements, if any, regarding sale of equipment.

The School Board recognizes that the district may own personal property which is unusable, obsolete, or no longer needed by the district and that the disposal of such property may be in the best interests of the district. Inoperable items remaining after a sale may be disposed of properly.

The Superintendent or designee shall identify to the School Board all inventoried personal property not needed by the district, together with the estimated value and recommended disposition. With School Board approval, the Superintendent or designee shall arrange for the sale or disposal of district personal property in accordance with state and federal law.

Surplus equipment $5000 or greater, purchased with Federal Fund must comply with Uniform Administrative Requirements - 2 CFR 200.313.

Disposal of items with an estimated value of less than $5,000 will be left to the discretion of the Superintendent or designee.

(cf. 3440- Inventories)

Revised 9/2023

FAMILY ENGAGEMENT

BP 5124.1

Note: This is not a required policy and may updated at the discretion of the Board.

The Board recognizes families provide early and ongoing education to their children, and a strong collaboration between families and schools will ensure students continue to receive the supports they need to thrive and be prepared in school and beyond. The board also believes that partnerships with parents, guardians, and families are an important part of the educational program. Current research indicates a home to school partnership and greater involvement on the part of parents and families in the education of their children generally result in higher achievement scores, improved student behavior and reduced absenteeism. All parents, guardians, family members and foster caregivers have clear and active roles to contribute to the education of their children or foster children. All students can be successful when schools and families partner in children's education.

The District is committed to promoting family engagement as an integral part of the educational experience. Through family engagement we will:

1. Establish a welcoming and inclusive environment that actively encourages family involvement in their child's education.
2. Foster effective communication and collaboration between families, schools, and the community to support student success.
3. Provide resources, training, and opportunities for families to enhance their capacity to support their child's learning and well-being.
4. Provide resources, training, and opportunities for school staff to enhance their capacity to engage in meaningful partnerships with families.
5. Recognize and respect the diverse cultures, backgrounds, and perspectives of all families in our district.

By implementing this Family Engagement Policy, the District aims to strengthen the partnership between parents, guardians, families, schools, and the community, ultimately enhancing student achievement and fostering a supportive educational environment.

In addition, building administrators/designees of schools receiving Title I funds will jointly develop with and distribute to parents of children participating in Title I programs a written parent and family involvement policy and guidelines that increases family interest in partnership and involvement. The requirements of the policy and guidelines are consistent with Federal and State law.

(cf. 6171 – Title I Programs)

Created 9/2023

ACADEMIC HONESTY BP 5131.9

Note: This optional policy may be revised or deleted as desired.

Academic honesty and personal integrity are foundational components of a student's education in both the process of learning, and individual character development.

The Board expects that students will be truthful in all academic endeavors, and likewise, experience the requisite honor of proving their capabilities to themselves and the world.

The learning community of students, parents/guardians, staff and administrators shall be responsible for creating and maintaining a positive school climate that encourages honesty.

The Board expects that students will not cheat, lie, plagiarize, or commit other acts of academic dishonesty. Students found to have committed an act of academic dishonesty shall be subject to district and school sanctions.

The Board recognizes that the advancement and availability of artificial intelligence/generative technology (AI/GT), means the learning community is very likely to utilize this new technology. Such use must meet the requirements of academic honesty and yet allow for its application as a new tool for instruction, critical thinking, exploration, and development of original thought and material. It is expected and required that use of AI/GT will be appropriately referenced and noted.

(cf. 5144 - Discipline)

Revised 9/2023

AASB POLICY REFERENCE MANUAL
9/92

UNIFORM INVESTIGATIONS BP 5141.43(a)

The purpose of this policy is to provide guidance and procedures for conducting fair, thorough, and consistent investigations within the District. This policy is designed to ensure the safety, well-being, and rights of all students, staff, and stakeholders involved in the investigative process. It aims to foster a safe and inclusive learning environment where concerns and allegations are taken seriously, investigated promptly, and resolved appropriately.

By implementing the Administrative Regulation associated with this uniform investigation policy, the district is committed to maintaining a safe, respectful, and inclusive learning environment for all. Through fair and thorough investigations, we strive to address concerns, promote accountability, and protect the rights and well-being of our students and staff.

(cf. 5141.42 – Professional Boundaries of Staff with Students
(cf. 1312 – Public Complaints Concerning the Schools
(cf. 1312.3 – Public Complaints Concerning Discrimination
(cf. 4118 – Certificated Personnel – Suspension/Disciplinary Action
(cf. 4119.11 – All Personnel – Sexual Harassment
(cf. 4144/4244/4344 – Complaints

This policy is designed to supplement and reinforce the mandatory reporting requirements of AS 47.17, the reporting requirements of AS 14.33.210, and the concepts of Professional Boundaries of Staff with Students. This policy is not designed to replace or impact investigations conducted by the Professional Teaching Practices Commission pursuant to AS 14.20.

The associated Administrative Regulation has been developed to assist school administrators when it is necessary to investigate complaints or allegations of misconduct against school staff, including volunteers. These investigations are referred to as administrative investigations.

Legal Reference:

ALASKA STATUTES

AS 14.20 *Teacher and School Personnel*
AS 40.25 *Public Record Disclosure*
AS 47.17 *Child Protection*
AS 14.33.210 *Reporting of Incidents of Harassment, Intimidation, or Bullying*

ALASKA ADMINISTRATIVE CODE

4 AAC 12.210 *Reporting Instances of Prohibited Sexual Conduct*
4 AAC 12.220 *Failure to Report Instances of Prohibited Sexual Conduct*
20 AAC 10.020(b)(4)(A) *Code of Ethics and Teaching Standards*
20 AAC 10.020(b)(4)(B) *Code of Ethics and Teaching Standards*

Created 9/2023

SCHOOL DAY BP 6112

Note: Pursuant to AS 14.03.040, the school board may approve Saturday as a day in session. The following sample policy may be revised or deleted to reflect district philosophy and needs.

The School Board shall fix the length of the school day subject to the provisions of law.

The school day shall be arranged and scheduled by the administration so as to offer the greatest return educationally for the time spent, within the limitations of school facilities and requirements of state law and regulations.

A school that offers kindergarten shall provide a kindergarten day in session that consists of at least two hours of instructional time. A kindergarten student who attends school for less than four hours per day, exclusive of intermissions, will be counted for funding purposes under 4 AAC 09.040, *Counting of correspondence students and part-time public school students*.

Legal Reference:

ALASKA STATUTES
14.03.40 Day in session

ALASKA REGULATIONS
4 AAC 05.100 Kindergarten day in session
4 AAC 09.040 Counting of correspondence students and part-time public school students

Revised 9/2023

ALASKA READS ACT INTERVENTION PROGRAMS BP 6147

Note: The purpose of this policy is to implement the intervention programs set forth in the Alaska Reads Act, HB 114.

The Superintendent shall coordinate the establishment of a District-wide reading intervention program in accordance with AS 14.30.765. The services provided under this program must, to the extent practicable:

1. Be provided by a district reading teacher, or paraprofessional under the supervision of a reading teacher, to all students in grades kindergarten through three who are determined to have a reading deficiency based on the statewide screening tool provided by the Department.
2. Provide explicit and systematic instruction in phonemic awareness, phonics, vocabulary development, reading fluency, oral language skills, and reading comprehension, as necessary.
3. Use evidence-based reading intervention methods that have shown proven results in accelerating student reading achievement within a single school year.
4. Include instruction with detailed explanations, extensive opportunities for guided practice, and opportunities for error correction and feedback.
5. Incorporate daily targeted small group reading instruction based on student needs, either in person or online.
6. Monitor the reading progress of each student's reading skills throughout the school year and adjust instruction according to student needs.
7. Be implemented during regular school hours through any available method, including in person or through online delivery by teachers or specialty reading coaches.
8. Be implemented outside of regular school hours, as directed in the student's individual reading improvement plan, for a student who scores at the lowest achievement level on the statewide screening tool.
9. Be reviewed based on a department-approved response to intervention or multi-tiered system support models, addressing additional support and services needed to remedy identified needs.
10. Support reading intervention at home by parents or guardians by offering a list of adult literacy resources and organizations, providing opportunities for parent or guardian participation in training workshops, and encouraging regular parent or guardian-guided home reading activities.

Individual Reading Improvement Plans

The District shall provide each student in grades kindergarten through three who is determined to have a reading deficiency based on the statewide screening tool an individual reading improvement plan. This plan must be in accordance with the provisions set forth in AS 14.30.765(b).

Notice Requirements

If at any time during the school year a student in grades kindergarten through three demonstrates a reading deficiency, a District representative shall notify the student’s parent or guardian. This notification must be not later 15 days after identification of the reading deficiency and include the information described in AS 14.30.765(c).

Progression

Students identified with a reading deficiency shall progress through grades as set forth under AS 14.30.765(d) – (m).

Legal Reference:

ALASKA STATUTES

AS 14.30.760 *Statewide screening and support*

AS 14.30.765 *Reading intervention services and strategies; progression*

ALASKA ADMINISTRATIVE CODE

4 AAC 06.400 *Statewide literacy screening and support*

4 AAC 06.405 *Reading intervention services and strategies*

4 AAC 06.410 *Individual reading improvement plan*

4 AAC 06.415 *Student Progression*

4 AAC 06.490 *Definitions*

Created 9/2023

EARLY EDUCATION PROGRAMS BP 6148

Note: The purpose of this policy is to implement early education programs established by the Alaska Reads Act, HB 114. Early education programs are voluntary, and grant funds can be used to either develop a Pre-K program or improve upon an existing program.

The Superintendent, in consideration of appropriate District need, may seek a grant for an early education program under AS 14.03.410 and 4 AAC 60.200. Before applying for a grant, the District shall, to avoid duplicate programs and facilitate resource sharing to improve early education within the district, consult with each local and tribal head start program within the district's boundaries. The Superintendent must ensure that the District has the resources and intent to create an early education program.

The District-wide early education program must:

1. Adopt an evidence-based program of learning.
2. Have a certificated teacher in charge of the program.
3. Implement the guidelines for an early education program described in the department's *State of Alaska Early Learning Guidelines* under 4 AAC 60.170.
4. Have a minimum day in session of two hours per day, five days per week.
5. Accommodate the early education needs of district children and their families, regardless of socioeconomic circumstances.

The District shall provide an annual ADM assurances report regarding its early education program in a format prescribed by the Department of Education and Early Development.

During the grant period, a school district that receives a grant award under 4 AAC 60.200 must demonstrate progress towards meeting or exceeding the standards for a high quality early education program under AS 14.07.165(a)(5) and 4 AAC 60.190 by complying with the department's grant reporting requirements and submitting a year-end report to the department.

The District's early education program must also comply with the requirements under 4 AAC 60.205.

Legal References:

ALASKA STATUTES

AS 14.03.410 *Early education programs; grants*

ALASKA ADMINISTRATIVE CODE

4 AAC 60.190 *High quality early education program standards*

4 AAC 60.195 *District accountability; revocation of approval of district-wide early education program*

4 AAC 60.20 *District-wide early education program grants; applications; duration; award determinations*

4 AAC 60.205 *District-wide early education program grant recipient obligations*

4 AAC 60.210 *Criteria for inclusion of district-wide early education program students within a district's ADM*

Instruction

4 AAC 60.990 *Definitions*

Created 9/2023

AASB POLICY REFERENCE MANUAL
9/92

Note: The following sample bylaw may be revised to reflect district philosophy and needs.

Limits of Board Members Authority

The School Board has broad but clearly limited powers. The exercise of its authority is restricted to the functions required or permitted by law, and then only when it acts in a legally constituted meeting. Board members have authority only in regularly called meetings of the Board, or when delegated specific tasks by Board action.

The Board is the unit of authority. The Board member is a part of the governing body which represents and acts for the community as a whole. Apart from the normal function as part of the unit, the Board member has no individual authority. No individual member of the Board, by virtue of holding office, shall exercise any administrative responsibility with respect to the schools; nor, as an individual, command the services of any school employee. Individually, the Board member may not commit the district to any policy, act or expenditure.

Optional:

School visits by Board members are encouraged. Principals should receive a courtesy call in advance of a visit. Board members, as with all visitors, must check in with the school office. Board members who visit schools of their own volition have no more authority than any other citizen.

(cf. 1250 - Visits to the Schools)

Note: The following is an optional process for Board members to make information requests.

Board Member Requests for Information

Board members should make informed decisions on matters before them for a vote. The Superintendent or designee is responsible for providing the Board with relevant materials to inform the Board on those matters on which it is to act. If Board members desire further information, a request for information shall be directed to the Superintendent, pursuant to the following guidelines:

1. Requests for simple facts. Any Board member may make a request for simple facts to the Superintendent who will forward the request to the appropriate staff member. All responses to requests for simple facts will be provided to the requesting Board member, and copied to the Board President.

2. Requests for reports, research, administrative studies, detailed information, or for information relating to a problem or a potential problem in the District. Some information requests require significant administrative time and explanation to provide the requested response. Individual Board members shall submit such requests to the full Board for consideration. Upon [concurrence of the other board members/majority request of the Board], the request shall then be forwarded to the Superintendent for response.

BOARD MEMBERS (continued) BB 9200(b)

3. Complaints regarding personnel. Board members may have their own complaints regarding District personnel ~~or may hear such complaints from the community~~. These concerns should be privately communicated to the Superintendent.

4. When Board members receive complaints or requests for action from staff, students or members of the public, the Board members will direct the staff, students, members of the public to the appropriate complaint policy. Such information will be conveyed to the superintendent.

5. Requests for legal advice or opinions by a Board member that will incur a cost for the district must be approved by a majority vote of the Board before the request is made to legal counsel. Legal counsel is responsible to the Board.

(cf. 6162.8 - Research)
(cf. 9322 - Agenda/Meeting Materials)

Obligations of Members

Members of the Board must endeavor to attend all meetings, study all materials presented with the agenda prior to attending the meeting, participate in the discussion of any items which come before the Board, and vote on all motions and resolutions, abstaining only for compelling reasons. If no compelling reason requires abstention, members of the Board shall not abstain.

The Board member should not subordinate the education of children and youth to any partisan principle, group interest, or the member's own personal interest.

The Board member should be prepared and willing to devote a sufficient amount of time to the study of the problems of education in the district, the state, and the nation in order to interpret them to the people of the district.

(cf. 9230 - Meetings)

Legal Reference:
ALASKA STATUTES
14.14.140 Restrictions on employment

Revised ~~4/2022~~9/2023

MEMORANDUM #23-23 **DATE: October 3, 2023**
TITLE: Budget Adjustment

SUGGESTED MOTION:
I move that the board approve item 14.g, Memo 23-23 which approves the updated and adjusted FY24 CSD Budget.

BACKGROUND:
Each year it is the board's responsibility to approve the CSD budget. The FY24 budget was approved last spring and was submitted to DEED. The current adjustment for Board approval contains:

- Additional Intensive SPED funding
- A reduction in one-time funding to the BSA from $680 to $340 (Governor's veto)
- An increase in projected investment earnings

SUPERINTENDENT RECOMMENDATION:

It is the recommendation of the superintendent to approve the budget adjustment.

SCHOOL BOARD VOTE:

Memorandum 23-23 passed/didn't pass by the Chugach School Board this 3rd day of October, 2023.

Board Member	Approve/ Yea	Reject/ Nea	Abstain	Not Present
Charlene Arneson				
Deserae Stellwag				
Wayne Shen				
David Totemoff				
Gail Evanoff				

Attested By: _____ Date 10/03/23
Serena Jackson

Title: Chugach School Board Secretary

Alaska Department of Education & Early Development - School Finance
FY2024 District Operating Fund Budget
Instructions

- ☐ **Completing the workbook** - In order to use the spreadsheet capabilities, save this internet version to your computer and open the saved document through your Excel program. This spreadsheet automatically calculates totals after each activity, then automatically fills the operating fund budget summary on page 2. Many cells are protected against input because they have formulas. Use the Tab key to navigate through the document to complete the budget.

- ☐ **Uniform Chart of Accounts** - Please code according to the required codes AND DESCRIPTIONS in the State of Alaska Uniform Chart of Accounts 2018 Edition so your budget will not have to be returned to you. The Chart of Accounts is on our website at: https://education.alaska.gov/publications/chart_of_accounts.pdf
Effective 7/1/2018.

- ☐ **Do NOT include cents** when entering balances.

- ☐ **Include personnel full-time equivalents (FTE's)** for each salary listed in the expenditure functions.

- ☐ **Fund balances** - please manually enter the beginning and ending unreserved and reserved fund balances.

- ☐ **Leave blank** any required fund, function, or object code that is not applicable to your district.

- ☐ **ADM** - The district ADM for FY2024, upon which the budget is based, may or may not be the same as submitted for the initial projections. Please breakout the projected ADM as brick & mortar and then correspondence.

- ☐ **TRS/PERS On-behalf** - The full amount of the TRS and PERS on-behalf from all funds must be recorded in the operating fund using object revenue codes 056 and 057. The district is to calculate the functional break-out in order to allocate the related on-behalf expenditures.

- ☐ **Proofread and check for accuracy** the final workbook before submitting to the department.

Questions? Please contact:
School Finance
Linda Hall, Audit & Review Analyst
(907) 465-2748 or linda.hall2@alaska.gov

Microsoft Word - HB0076Z.DOC (akleg.gov)

Note: Sec 10, Ch 2, SLA 21, Pg 10, Ln 10-15 and Pg 14, Ln 23 (HB 76)

* Sec. 10. The uncodified law of the State of Alaska is amended by adding a new section to read:
SCHOOL OPERATING FUNDS. (a) Notwithstanding AS 14.17.505(a), a school district may accumulate in a fiscal year an unreserved portion of its year-end fund balance in its school operating fund, as defined in regulation by the Department of Education and Early Development, in any amount.

(b) Notwithstanding AS 14.17.505(b), the unreserved portion of the year-end operating fund balance of a school district for the preceding fiscal year may not be used to reduce the state aid paid to that school district in the current fiscal year.

* Sec. 21. (d) Section 10 of this Act is repealed June 30, 2025.

THIS REPORT IS DUE JULY 15TH
OF THE FISCAL YEAR FOR WHICH IT APPLIES
PER REGULATION 4 AAC 09.110.

Alaska Department of Education & Early Development - School Finance
FY2024 School Operating Fund Budget
Signature Page

School District Name: Chugach School District

Proj. District ADM: 65 + 540 = 605
brick & mortar ADM + correspondence ADM

Proj. Intensive count: 2

Proj. SPED count: 7
Total SPED student count

Prepared by: _____ _____
Signature/Title Date

Phone Number: _____

Approved by: _____ _____
Superintendent's Signature Date

Approval of City/Borough Official of Local Contribution designated on Page 3:

_____ _____
Official Signature/Title Date

Alaska Department of Education & Early Development - School Finance
FY2024 School Operating Fund Budget Summary

Chugach School District
District Name

Beginning Fund Balance: July 1, 2023 - (Subject to 10% Limit ~~per AS 14.17.505(a)~~)*			$400,000
(Excluded from the 10% Limit)			$1,200,000
Total Beginning Fund Balance			$1,600,000
Revenue			
010 City/Borough Appropriations	(1)	$0	
030 Earnings on Investments	(2)	120,000	
040 Other Local Revenues	(3)	10,000	
041 Tuition from Students	(4)	0	
042 Tuition - Other Districts	(5)	0	
047 E-Rate Program	(6)	1,051,013	
050 State Sources	(7)	5,089,187	
100 Federal Sources - Direct	(8)	187,306	
150 Federal Sources - Through the State	(9)	59,376	
190 Federal Sources - Other Agencies	(10)	0	
250 Transfers From Other Funds	(11)	0	
Total Revenue			$6,516,882
Expenditures			
100 Instruction	(12)	$3,132,812	
200 Special Education Instruction	(13)	196,484	
220 Special Education Support Services	(14)	333,038	
300 Support Services - Students	(15)	0	
350 Support Services - Instruction	(16)	1,527,224	
400 School Administration	(17)	123,871	
450 School Administration Support Services	(18)	0	
510 District Administration	(19)	275,835	
550 District Administration Support Services	(20)	265,053	
600 Operations and Maintenance of Plant	(21)	531,935	
700 Student Activities	(22)	0	
780 Community Services	(23)	5,000	
900 Other Financing Uses	(24)	55,275	
Total Expenditures			$6,446,527
Ending Fund Balance: June 30, 2024 (Subject to 10% Limit ~~per AS 14.17.505(a)~~)*			$570,355 **
(Excluded from the 10% Limit)			$1,100,000
Total Ending Fund Balance			$1,670,355

** Must be greater than or equal to zero

***Note regarding Fund Balance--**please see the excerpt from HB 76 on the instructions page.

Alaska Department of Education & Early Development - School Finance
FY2024 School Operating Fund Budget Revenues

Chugach School District
District Name

010 City/Borough Appropriations	Amount	
011 City/Borough Direct Appropriation		
012 City/Borough "In-Kind"		
(detail descriptions & dollar amts required for in-kind or budget will be returned)		
Total City/Borough Appropriations		$0
		Transferred to (1) on page 2
030 Earnings on Investments		
030 Earnings on Investments	120,000	
Total Earnings on Investments		$120,000
		Transferred to (2) on page 2
040 Other Local Revenues		
040 Other Local Revenues - Identify:		
(provide detail descriptions & dollar amts for local revenues)		
Fee for services and local donations	10,000	
Total Other Local Revenues		$10,000
		Transferred to (3) on page 2
041 Tuition from Students		
041 Tuition from Students		
Total Tuition from Students		$0
		Transferred to (4) on page 2
042 Tuition - Other Districts		
042 Tuition		
Total Tuition - Other Districts		$0
		Transferred to (5) on page 2
047 E-Rate Program		
047 E-Rate Program Revenue	1,051,013	
Total E-Rate Program		$1,051,013
		Transferred to (6) on page 2

Alaska Department of Education & Early Development - School Finance
FY2024 School Operating Fund Budget Revenues

Chugach School District
District Name

050 State Sources (051 includes quality schools grants)			
051	Foundation Program	4,591,795	
055	Supplemental Aid		
056	TRS On-Behalf Payments	197,373	
057	PERS On-Behalf Payments	15,674	
059	Tuition		
090	Other State Revenues - **Identify**		
	Quality Schools	12,780	
	One-time funding = BSA Increase of $340	271,565	
	Total State Sources		$5,089,187
			Transferred to (7) on page 2
100 Federal Sources - Direct			
110	Impact Aid (Public Law 874 (100%))	187,306	
140	Other Federal Revenue - **Identify**		
	Total Federal Sources - Direct		$187,306
			Transferred to (8) on page 2
150 Federal Sources - Through the State of Alaska - Identify:			
	ESSER Fund for retention bonus	59,376	
	Total Federal Sources - Through the State		$59,376
			Transferred to (9) on page 2
190 Federal Sources - Other Agencies - Identify:			
	Total Federal Sources - Other Agencies		$0
			Transferred to (10) on page 2
250 Transfers From Other Funds - Identify:			
	Total Transfers From Other Funds		$0
			Transferred to (11) on page 2
	Total Projected Revenues		$6,516,882

Alaska Department of Education & Early Development - School Finance
FY2024 School Operating Fund Budget Expenditures

Chugach School District
District Name

Function 100 Instruction	Amount		Personnel FTE
Salaries			
310 Certificated Salaries	1,053,364		13.50
320 Non-Certificated Salaries	185,120		3.75
Total Salaries		$1,238,484	
Employee Benefits			
360 Employee Benefits	739,328		
380 Housing Allowance/Subsidy			
390 Transportation Allowance			
Total Employee Benefits		$739,328	
Total Salaries & Employee Benefits		$1,977,812	
Non-Personnel			
410 Professional and Technical Services	550,000		
419 Chief Administrator Contract Services			
420 Staff Travel	40,000		
425 Student Travel			
430 Utility Services	80,000		
435 Energy			
440 Other Purchased Services	15,000		
445 Insurance and Bond Premiums			
450 Supplies, Materials and Media	440,000		
480 Tuition and Stipends			
490 Other Expenses - Identify:			
510 Equipment	30,000		
Total Non-Personnel		$1,155,000	
Total Salaries, Benefits, Non-Personnel		$3,132,812	

Transferred to (12) on page 2

Alaska Department of Education & Early Development - School Finance
FY2024 School Operating Fund Budget Expenditures

Chugach School District
District Name

Function 200 Special Education Instruction	Amount		Personnel FTE
Salaries			
310 Certificated Salaries	134,615		2.00
320 Non-Certificated Salaries			
Total Salaries		$134,615	
Employee Benefits			
360 Employee Benefits	61,869		
380 Housing Allowance/Subsidy			
390 Transportation Allowance			
Total Employee Benefits		$61,869	
Total Salaries & Employee Benefits		$196,484	
Non-Personnel			
410 Professional and Technical Services			
420 Staff Travel			
425 Student Travel			
430 Utility Services			
435 Energy			
440 Other Purchased Services			
445 Insurance and Bond Premiums			
450 Supplies, Materials and Media			
480 Tuition and Stipends			
490 Other Expenses - Identify:			
510 Equipment			
Total Non-Personnel		$0	
Total Salaries, Benefits, Non-Personnel		$196,484	

Transferred to (13) on page 2

Alaska Department of Education & Early Development - School Finance
FY2024 School Operating Fund Budget Expenditures

Chugach School District
District Name

Function 220 Special Education Support Services - Students	Amount		Personnel FTE
Salaries			
310 Certificated Salaries	158,985		1.10
320 Non-Certificated Salaries			
Total Salaries		$158,985	
Employee Benefits			
360 Employee Benefits	79,053		
380 Housing Allowance/Subsidy			
390 Transportation Allowance			
Total Employee Benefits		$79,053	
Total Salaries & Employee Benefits		$238,038	
Non-Personnel			
410 Professional and Technical Services	50,000		
419 Chief Administrator Contract Services			
420 Staff Travel	45,000		
425 Student Travel			
430 Utility Services			
435 Energy			
440 Other Purchased Services			
445 Insurance and Bond Premiums			
450 Supplies, Materials and Media			
480 Tuition and Stipends			
490 Other Expenses - Identify:			
510 Equipment			
Total Non-Personnel		$95,000	
Total Salaries, Benefits, Non-Personnel		$333,038	

Transferred to (14) on page 2

Alaska Department of Education & Early Development - School Finance
FY2024 School Operating Fund Budget Expenditures

Chugach School District
District Name

Function 300 Support Services - Students	Amount	Personnel FTE
Salaries		
310 Certificated Salaries		
320 Non-Certificated Salaries		
Total Salaries	$0	
Employee Benefits		
360 Employee Benefits		
380 Housing Allowance/Subsidy		
390 Transportation Allowance		
Total Employee Benefits	$0	
Total Salaries & Employee Benefits	$0	
Non-Personnel		
410 Professional and Technical Services		
420 Staff Travel		
425 Student Travel		
430 Utility Services		
435 Energy		
440 Other Purchased Services		
445 Insurance and Bond Premiums		
450 Supplies, Materials and Media		
480 Tuition and Stipends		
490 Other Expenses - Identify:		
510 Equipment		
Total Non-Personnel	$0	
Total Salaries, Benefits, Non-Personnel	$0	

Transferred to (15) on page 2

Alaska Department of Education & Early Development - School Finance
FY2024 School Operating Fund Budget Expenditures

Chugach School District
District Name

Function 350 Support Services - Instruction	Amount		Personnel FTE
Salaries			
310 Certificated Salaries			
320 Non-Certificated Salaries	152,960		3.25
Total Salaries		$152,960	
Employee Benefits			
360 Employee Benefits	111,251		
380 Housing Allowance/Subsidy			
390 Transportation Allowance			
Total Employee Benefits		$111,251	
Total Salaries & Employee Benefits		$264,211	
Non-Personnel			
410 Professional and Technical Services	50,000		
420 Staff Travel	12,000		
425 Student Travel			
430 Utility Services	1,191,013		
435 Energy			
440 Other Purchased Services			
445 Insurance and Bond Premiums			
450 Supplies, Materials and Media	10,000		
480 Tuition and Stipends			
490 Other Expenses - Identify:			
510 Equipment			
Total Non-Personnel		$1,263,013	
Total Salaries, Benefits, Non-Personnel		$1,527,224	

Transferred to (16) on page 2

Alaska Department of Education & Early Development - School Finance
FY2024 School Operating Fund Budget Expenditures

Chugach School District
District Name

Function 400 School Administration	Amount		Personnel FTE
Salaries			
310 Certificated Salaries	79,825		0.50
Total Salaries		$79,825	
Employee Benefits			
360 Employee Benefits	38,046		
380 Housing Allowance/Subsidy			
390 Transportation Allowance			
Total Employee Benefits		$38,046	
Total Salaries & Employee Benefits		$117,871	
Non-Personnel			
410 Professional and Technical Services			
419 Chief Administrator Contract Services			
420 Staff Travel	5,000		
425 Student Travel			
430 Utility Services			
435 Energy			
440 Other Purchased Services			
445 Insurance and Bond Premiums			
450 Supplies, Materials and Media	1,000		
480 Tuition and Stipends			
490 Other Expenses - Identify:			
510 Equipment			
Total Non-Personnel		$6,000	
Total Salaries, Benefits, Non-Personnel		$123,871	

Transferred to (17) on page 2

Alaska Department of Education & Early Development - School Finance
FY2024 School Operating Fund Budget Expenditures

Chugach School District
District Name

Function 450 School Administration Support Services	Amount	Personnel FTE
Salaries		
320 Non-Certificated Salaries		
Total Salaries	$0	
Employee Benefits		
360 Employee Benefits		
380 Housing Allowance/Subsidy		
390 Transportation Allowance		
Total Employee Benefits	$0	
Total Salaries & Employee Benefits	$0	
Non-Personnel		
410 Professional and Technical Services		
420 Staff Travel		
425 Student Travel		
430 Utility Services		
435 Energy		
440 Other Purchased Services		
445 Insurance and Bond Premiums		
450 Supplies, Materials and Media		
480 Tuition and Stipends		
490 Other Expenses - Identify:		
510 Equipment		
Total Non-Personnel	$0	
Total Salaries, Benefits, Non-Personnel	$0	

Transferred to (18) on page 2

Alaska Department of Education & Early Development - School Finance
FY2024 School Operating Fund Budget Expenditures

Chugach School District
District Name

Function 510 District Administration	Amount		Personnel FTE
Salaries			
310 Certificated Salaries			
320 Non-Certificated Salaries	168,300		1.00
Total Salaries		$168,300	
Employee Benefits			
360 Employee Benefits	46,535		
380 Housing Allowance/Subsidy			
390 Transportation Allowance			
Total Employee Benefits		$46,535	
Total Salaries & Employee Benefits		$214,835	
Non-Personnel			
410 Professional and Technical Services	20,000		
419 Chief Administrator Contract Services			
420 Staff Travel	30,000		
425 Student Travel			
430 Utility Services			
435 Energy			
440 Other Purchased Services			
445 Insurance and Bond Premiums			
450 Supplies, Materials and Media	1,000		
480 Tuition and Stipends			
490 Other Expenses - Identify:			
AASB Dues	10,000		
510 Equipment			
Total Non-Personnel		$61,000	
Total Salaries, Benefits, Non-Personnel		$275,835	

Transferred to (19) on page 2

Alaska Department of Education & Early Development - School Finance
FY2024 School Operating Fund Budget Expenditures

Chugach School District
District Name

Function 550 District Administration Support Services	Amount		Personnel FTE
Salaries			
310 Certificated Salaries			
320 Non-Certificated Salaries	92,560		1.00
Total Salaries		$92,560	
Employee Benefits			
360 Employee Benefits	38,493		
380 Housing Allowance/Subsidy			
390 Transportation Allowance			
Total Employee Benefits		$38,493	
Total Salaries & Employee Benefits		$131,053	
Non-Personnel			
410 Professional and Technical Services	150,000		
420 Staff Travel			
425 Student Travel			
430 Utility Services	10,000		
435 Energy			
440 Other Purchased Services	9,000		
445 Insurance and Bond Premiums	47,500		
450 Supplies, Materials and Media	10,000		
480 Tuition and Stipends			
490 Other Expenses - Identify:			
Dues and membership fees - CEE, Aurora, ACSA	7,500		
495 Indirect Costs	(100,000)		
510 Equipment			
Total Non-Personnel		$134,000	
Total Salaries, Benefits, Non-Personnel		$265,053	

Transferred to (20) on page 2

Alaska Department of Education & Early Development - School Finance
FY2024 School Operating Fund Budget Expenditures

Chugach School District
District Name

Function 600 Operations and Maintenance of Plant	Amount		Personnel FTE
Salaries			
310 Certificated Salaries	101,157		1.00
320 Non-Certificated Salaries	45,930		1.00
Total Salaries		$147,087	
Employee Benefits			
360 Employee Benefits	59,848		
380 Housing Allowance/Subsidy			
390 Transportation Allowance			
Total Employee Benefits		$59,848	
Total Salaries & Employee Benefits		$206,935	
Non-Personnel			
410 Professional and Technical Services	30,000		
420 Staff Travel			
425 Student Travel			
430 Utility Services	20,000		
435 Energy	175,000		
440 Other Purchased Services	10,000		
445 Insurance and Bond Premiums	75,000		
450 Supplies, Materials and Media	15,000		
480 Tuition and Stipends			
490 Other Expenses - Identify:			
510 Equipment			
Total Non-Personnel		$325,000	
Total Salaries, Benefits, Non-Personnel		$531,935	

Transferred to (21) on page 2

Alaska Department of Education & Early Development - School Finance
FY2024 School Operating Fund Budget Expenditures

Chugach School District
District Name

Function 700 Student Activities	Amount	Personnel FTE
Salaries		
310 Certificated Salaries		
320 Non-Certificated Salaries		
Total Salaries	$0	
Employee Benefits		
360 Employee Benefits		
380 Housing Allowance/Subsidy		
390 Transportation Allowance		
Total Employee Benefits	$0	
Total Salaries & Employee Benefits	$0	
Non-Personnel		
410 Professional and Technical Services		
420 Staff Travel		
425 Student Travel		
430 Utility Services		
435 Energy		
440 Other Purchased Services		
445 Insurance and Bond Premiums		
450 Supplies, Materials and Media		
480 Tuition and Stipends		
490 Other Expenses - Identify:		
510 Equipment		
Total Non-Personnel	$0	
Total Salaries, Benefits, Non-Personnel	$0	

Transferred to (22) on page 2

Alaska Department of Education & Early Development - School Finance
FY2024 School Operating Fund Budget Expenditures

Chugach School District
District Name

Function 780 Community Services	Amount		Personnel FTE
Salaries			
310 Certificated Salaries			
320 Non-Certificated Salaries			
Total Salaries		$0	
Employee Benefits			
360 Employee Benefits			
380 Housing Allowance/Subsidy			
390 Transportation Allowance			
Total Employee Benefits		$0	
Total Salaries & Employee Benefits		$0	
Non-Personnel			
410 Professional and Technical Services			
420 Staff Travel			
425 Student Travel			
430 Utility Services			
435 Energy			
440 Other Purchased Services			
445 Insurance and Bond Premiums			
450 Supplies, Materials and Media			
480 Tuition and Stipends			
490 Other Expenses - Identify:			
Scholarships	5,000		
510 Equipment			
Total Non-Personnel		$5,000	
Total Salaries, Benefits, Non-Personnel		$5,000	

Transferred to (23) on page 2

Alaska Department of Education & Early Development - School Finance
FY2024 School Operating Fund Budget Other Financing Uses

Chugach School District
District Name

Function 900 Other Financing Uses

		Amount	
Transfers To:			
550	Transfer to Other Funds		
	Breakfast Program - Salaries/benefits only	40,275	
	Breakfast Program - Food	15,000	
	Total Other Financing Uses		$55,275

Transferred to (24) on page 2

Alaska Department of Education and Early Development - School Finance
FY2024 School Operating Fund Budget TRS/PERS Functional Breakdown

Chugach School District
District Name

The department uses two required revenue object codes, 056 and 057, for the purpose of recording TRS and PERS on-behalf revenue. The full amount of the TRS and PERS on-behalf from all funds must be recorded in the operating fund. The district is to calculate the functional break-out in order to allocate the related on-behalf expenditure.

The district is to use the following allocation method for breaking out the TRS by function.

1) To calculate the TRS on-behalf amount take the difference between the Board Recommended Rate and the Effective Rate and multiply the difference by the total district wide TRS payroll from all funds. You will now have the total dollar amount of the TRS on-behalf for all funds.
2) Divide the (total district wide TRS payroll by function from all funds) by the (total district wide TRS payroll from all funds) to derive a percentage of total district wide TRS payroll by function.
3) The total district wide TRS payroll by function percentage is multiplied by the total TRS on-behalf to come up with the total TRS on-behalf by function to be recorded in the operating fund.

The district is to use the same methodology for recording total PERS on-behalf. The TRS and PERS on-behalf allocations are to be recorded in the schedule below and also included in the employee benefits in each function. The total on-behalf employee benefits by function should reconcile to the total on-behalf revenues recorded from page 4.

Note: TRS on-behalf rate for FY2024 is 12.96% and PERS on-behalf rate for FY2024 is 3.10%

	TRS	PERS
Total On-Behalf Revenue from page 4	197,373	15,674
Function 100 On-Behalf Expenditures	136,516	6,639
Function 200 On-Behalf Expenditures	17,446	
Function 220 On-Behalf Expenditures	19,956	
Function 300 On-Behalf Expenditures		
Function 350 On-Behalf Expenditures		4,742
Function 400 On-Behalf Expenditures	10,345	
Function 450 On-Behalf Expenditures		
Function 510 On-Behalf Expenditures		
Function 550 On-Behalf Expenditures		2,869
Function 600 On-Behalf Expenditures	13,110	1,424
Function 700 On-Behalf Expenditures		
Function 780 On-Behalf Expenditures		
Total On-Behalf Employee Benefits by Function	197,373	15,674

Note: TRS and PERS on-behalf for Pupil Transportation and Food Service should be included in function 300 and TRS and PERS on-behalf for Construction & Facilities Acquisition should be included in function 600.