Schuyler Community Schools
Board of Education Regular Meeting
Monday, July 12, 2021 6:30 PM
Schuyler Community Schools Board Room
120 West 20th Street
Schuyler, NE 68661

I. Call Meeting to Order
I.A. Pledge of Allegiance
I.B. Declaration of Open Meeting
II. Approval of Consent Agenda
II.A. Agenda
II.B. Minutes
II.C. Acceptance of Claims
II.C.1. Bills of $5,000 or more
II.D. Financial
II.E. Other Listed Reports
III. Public Forum - We ask that all presentation be limited in their length.
III.A. Recognition of visitors and guests
III.B. Other topics (limited to 5 minutes - subject to guidelines of the Board Participation Policy)
IV. Action Items
IV.A. Building, Grounds, and Transportation
IV.A.1. Consider, discuss, and take action to set the price for the morning and afternoon bus service to Lonnie's Trailer Court.

IV.A.2. Consider, discuss and take all necessary action to award and approve a construction contract for replacement of the high school and middle school windows.

IV.B. Governance: Public Relations, Technology, and Planning
IV.B.1. Consider, discuss, and take action to approve 2021-22 membership with the Nebraska Rural Community Schools Association (NRCSA)
IV.C. Budget, finance, negotiations, and personnel
IV.C.1. Consider, discuss, and take action to approve the contract with Pekny and Associates, CPA's, PC for the 2020-2021 District Audit.
IV.C.2. Consider, discuss, and take action to approve staff resignations
IV.C.3. Consider, discuss, and take action to approve new hire recommendations
V. Discussion Items and Reports
V.A. Discuss Return to School Plan for 2021-22 school year.
V.B. Superintendent's Report
V.C. Board Member/Committee Reports
VI. Correspondence Items

VII. Adjournment

Prepared by: Christina Bywater, Secretary to the Board

Schuyler Community Schools
Board of Education Regular Meeting Monday, June 14, 2021 6:30 PM
Schuyler Community Schools Board Room
120 W. 20th Street
Schuyler, NE 68661-2400
Posting Locations:

- Schuyler Sun
- District Office Building Front Door
- Schuyler Post Office
- Colfax County Courthouse

Posted Date: 6-10-2021

Parent Involvement Hearing - The Parent Involvement Hearing was opened at 6:33 PM. This annual hearing is required to be held. The focus of parental involvement is to further parent participation at all levels through open-houses, parent-teacher conferences, and parent education. The hearing was closed at 6:35 PM

Student Fees Hearing
The Student Fees Hearing was opened at 6:35 PM. This annual hearing is required. To receive a fee waiver, a family must fill out a waiver form for an individual fee. All fees must be approved by an administrator prior to issuance. The hearing closed at 6:40 PM.

President Brabec called meeting to order at 6:40 PM. Board Members present: Brabec, Lanuza, Sayer, Vavricek, Marino. Absent: Misek

President Brabec read the Mission Statement and declared the meeting to be in open session. All school board members and the public were notified of the meeting in advance according to State Law 84-1411. All present participated in the Pledge of Allegiance.

Motion to approve the consent agenda Passed with a motion by Nina Lanuza and a second by Dr Renee Sayer.

Motion to accept the 2020-2021 student fees report and reaffirm the student fees policy 506.10 for the 2021-2022 school year. Passed with a motion by Brian Vavricek and a second by Guadalupe Marino.

Motion to approve admission prices and activity pass rates as recommended. Passed with a motion by Nina Lanuza and a second by Guadalupe Marino.

Motion to approve 2021-2022 breakfast and lunch prices as recommended. Passed with a motion by Nina Lanuza and a second by Dr Renee Sayer.

Motion to accept staff resignations and thank them for their service to the district. Passed with a motion by Nina Lanuza and a second by Brian Vavricek. Resignation from: Kristy Theilen: SMS Para Educator, Baylie Richtig: Fishers Para Educator and Kara Dinslage: Head Start Para Educator

Motion to approve new hire recommendations. Passed with a motion by Brian Vavricek and a second by Guadalupe Marino. New hires are: Jessica Wendt: SCHS SPED/NewcomerTeacher, Giselle Arroyo: SES Para Educator, Karino Reynoso: SES Para Educator, Maria Loya: SES Custodial/Housekeeping

Dr. Hoesing reported that the Policy committee meet June 8th and will meet again June 17th to continue the review to have complete for the first reading in July for the new and amended polices. We will also approve the handbook updates

Due to an error in the window bids, our legal counsel has recommended rejecting all bids, no board action, and re-open the bid process. We will re-advertise the window project and set the date for bid opening and present the contract for board approval in July.

Motion to adjourn at 7:23PM passed with a motion by Dr. Renee Sayer and a second by Nina Lanuza.

Copy the link below to view:
https://zoom.us/rec/share/wXqyvIWFWuQE2u6_jEgc58T6i3nFvPNT2f8ntwkR9QT33VpB4fBo48QyJhfKbz3a.BMDsjdIWvlG3YQ9K

Schuyler Community Schools
Board of Education Regular Meeting
Monday, June 14, 2021 6:30 PM
Schuyler Community Schools Board Room
120 W. 20th Street
Schuyler, NE 68661-2400

Posting Locations:

- Schuyler Sun
- District Office Building Front Door
- Schuyler Post Office
- Colfax County Courthouse

Posted Date: 6-10-2021
Attendance Taken at 6:33 PM.
Guadalupe Marino: Absent
Chuck Misek: Absent
Richard Brabec: Present
Nina Lanuza: Present
Dr Renee Sayer: Present
Brian Vavricek: Present
Present: 4, Absent: 2.
Attendance Update Taken at 6:37 PM.
Guadalupe Marino: Present
Present: 5, Absent: 1.

I. Parent Involvement Hearing

Action Item

1. Hold a Public Hearing to discuss, consider, and receive input on the Parental Involvement Policies (1005.03 & 1005.12). The public will be given an opportunity to present information and opinions on a proposed Parental Involvement Policy. Attached are our parent involvement and parent engagement policies.

II. Student Fees Hearing

Action Item

Student Fees Policy Annual Requirement:
1. Hold a Public Hearing to discuss, consider and receive input on Student Fee Policy 506.10. The public will be given an opportunity to present information and opinions on the Student Fee Policy.

2. Review the amount of money collected from student pursuant to, and the use of waivers provided in, the student fee policies of the District for the 2020-21 school year. The annual report reflects student fees waived for **2020-21** were $4,120.00, fees collected were $19,611.76. In comparison, fees waived for **2019-20** were $740.00, fees collected were $32,739.75.

III. Call Meeting to Order

Procedural Item

STRIVE - COMMIT - SUCCEED - District Mission Statement

Schuyler Community Schools in partnership with parents, students, and the community is committed to educate students to become skilled, knowledgeable and responsible citizens in a global society - District Vision Statement

Notice of this meeting was given in advance according to State Law 84-1411, by giving notice of the meeting to the public. Notice of this meeting was also given in advance to all members of the Board of Education

III.A. Pledge of Allegiance

Procedural Item

III.B. Declaration of Open Meeting

Procedural Item

This meeting has been preceded by advance notice and is hereby declared to be in open session. A copy of the Open Meetings Act is posted in the front of the meeting room.

Nebraska Open Meetings Act: http://nitc.nebraska.gov/documents/statutes/NebraskaOpenMeetingsAct_current.pdf

IV. Approval of Consent Agenda

Consent Agenda

Discuss, Consider and Take Action on the consent agenda

Motion to approve the consent agenda Passed with a motion by Nina Lanuza and a second by Dr Renee Sayer.
Chuck Misek: Absent, Richard Brabec: Yea, Nina Lanuza: Yea, Guadalupe Marino: Yea, Dr Renee Sayer: Yea, Brian Vavricek: Yea
Yea: 5, Nay: 0, Absent: 1

IV.A. Agenda

Consent Item

IV.B. Minutes

Consent Item

IV.C. Acceptance of Claims

Consent Item

IV.C.1. Bills of $5,000 or more

Consent Item

IV.D. Financial

Consent Item

IV.E. Other Listed Reports

Consent Item

V. Public Forum - We ask that all presentation be limited in their length.

Information Item

V.A. Recognition of visitors and guests

Information Item

Rich Brabec

V.B. Other topics (limited to 5 minutes - subject to guidelines of the Board Participation Policy)

Information Item

VI. Action Items

Procedural Item

VI.A. Board Policy, Handbooks, and Support Programs

Information Item

Rich Brabec, Nina Lanuza
This committee is responsible for annual review of board policies, handbooks, and crisis/safety plans. This committee is also responsible for the support and development of support programs(nursing, food service) in the district.

VI.A.1. Consider, discuss, and take action to accept the 2020-2021 student fees report and reaffirm the student fees policy (506.10) for the 2021-2022 school year.

Action Item

Student Fees Policy Annual Requirement:
1. Hold a Public Hearing to discuss, consider and receive input on Student Fee Policy 506.10.
2. Review the amount of money collected from student pursuant to, and the use of waivers provided in, the student fee policy of the District for the 2020-2021 school year.

Motion to accept the 2020-2021 student fees report and reaffirm the student fees policy 506.10 for the 2021-2022 school year. Passed with a motion by Brian Vavricek and a second by Guadalupe Marino.
Chuck Misek: Absent, Richard Brabec: Yea, Nina Lanuza: Yea, Guadalupe Marino: Yea, Dr Renee Sayer: Yea, Brian Vavricek: Yea
Yea: 5, Nay: 0, Absent: 1

VI.A.2. Consider, discuss and take action to approve admission prices and activity passes for the 2021-2022 school year.

Action Item

Activity Pass (Activities/Field House)	Required	Admission	Pass Cost
Preschool children	No	Free	NA
K-5 Students	No	$4.00	$10.00
6-8 Students	Yes	$4.00	$10.00
9-12 Students	Yes	$4.00	$10.00
Adults	No	$6.00	$40.00
Senior Citizens	No	$6.00	$20.00

Motion to approve admission prices and activity pass rates as recommended. Passed with a motion by Nina Lanuza and a second by Guadalupe Marino.
Chuck Misek: Absent, Richard Brabec: Yea, Nina Lanuza: Yea, Guadalupe Marino: Yea, Dr Renee Sayer: Yea, Brian Vavricek: Yea
Yea: 5, Nay: 0, Absent: 1

VI.A.3. Consider, discuss, and take action to approve 2021-2022 school breakfast and lunch prices.

Action Item

The State of Nebraska does an annual review of lunch prices and costs associated with our food program. According to the guidelines, if you are operating in the black, you do not have to increase prices. If you are in the red, breakfast prices can only increase 5 cents, and lunch prices can only increase 10 cents. We recommend leaving our breakfast and lunch prices the same for the 2021-22 school year.

	SES and Rural Schools		**Middle School**		**High School**		**Adult**	
Meal	2021-22	2020-21	2021-22	2020-21	2021-22	2020-21	2021-22	2020-21
Breakfast	$1.65	$1.65	$1.65	$1.65	$1.65	$1.65	$2.45	$2.45
Lunch	$2.45	$2.45	$2.55	$2.55	$2.60	$2.60	$3.75	$3.75

Motion to approve 2021-2022 breakfast and lunch prices as recommended. Passed with a motion by Nina Lanuza and a second by Dr Renee Sayer.
Chuck Misek: Absent, Richard Brabec: Yea, Nina Lanuza: Yea, Guadalupe Marino: Yea, Dr Renee Sayer: Yea, Brian Vavricek: Yea

Yea: 5, Nay: 0, Absent: 1

VI.B. Budget, finance, negotiations, and personnel

Procedural Item

Chuck Misek, Rich Brabec, Brian Vavricek
This committee is responsible for budget, finance, and contract negotiations with administration, certificated staff, and support staff.

VI.B.1. Consider, discuss, and take action to accept staff resignations.

Action Item

1. Kristy Theilen: SMS Para Educator
2. Baylie Richtig: Fishers Para Educator
3. Kara Dinslage: Head Start Para Educator

Motion to accept staff resignations and thank them for their service to the district. Passed with a motion by Nina Lanuza and a second by Brian Vavricek.
Chuck Misek: Absent, Richard Brabec: Yea, Nina Lanuza: Yea, Guadalupe Marino: Yea, Dr Renee Sayer: Yea, Brian Vavricek: Yea
Yea: 5, Nay: 0, Absent: 1

VI.B.2. Consider, discuss, and take action to approve new hire recommendations.

Action Item

1. Jessica Wendt: SCHS SPED/Newcomer Teacher
2. Giselle Arroyo: SES Para Educator
3. Karino Reynoso: SES Para Educator
4. Maria Loya: SES Custodial/Housekeeping

Motion to approve new hire recommendations. Passed with a motion by Brian Vavricek and a second by Guadalupe Marino.
Chuck Misek: Absent, Richard Brabec: Yea, Nina Lanuza: Yea, Guadalupe Marino: Yea, Dr Renee Sayer: Yea, Brian Vavricek: Yea
Yea: 5, Nay: 0, Absent: 1

VII. Discussion Items and Reports

Procedural Item

VII.A. Superintendent's Report

Information Item

Dan Hoesing
1. **Board Policy Review:** The policy committee met with Jim Luebbe from NASB on June 8th to beginning the policy review. We completed 100's and 200's and are scheduled to

meet on June 17th to continue review of the 300's and 400's. Our goal is to have the review completed for first reading in July on new and amended policies.

2. **Policy and Handbook Updates:** With the board policy review, we moved first reading of new and amended policies to the July meeting along with handbook updates. This will still give us time to finalize handbooks prior to August 1st.

3. **Bullying/Harassment Policy Review:** We are required to review the bullying/Harassment Policy on an annual basis at a public meeting. In the past, we have done this review in June, but, federal/state statutes have changed and the board will be adopting amended policies in July.

4. **Window Bids:** Due to an error in the window bids, our legal counsel has recommended rejecting all bids, no board action, and re-open the bid process. We will re-advertise the window project and set the date for bid opening and present the contract for board approval in July.

VII.B. Board Member/Committee Reports

Information Item

Board Members

1. **June Foundation Meeting:** Brian Vavricek will review the meeting minutes posted on the district website. Due to the 4th of July holiday, the July Foundation meeting will be Monday, July 12th.

VIII. Correspondence Items

Information Item

IX. Adjournment

Action Item

Motion to adjourn Passed with a motion by Dr Renee Sayer and a second by Nina Lanuza.
Chuck Misek: Absent, Richard Brabec: Yea, Nina Lanuza: Yea, Guadalupe Marino: Yea, Dr Renee Sayer: Yea, Brian Vavricek: Yea
Yea: 5, Nay: 0, Absent: 1

SCHUYLER COMMUNITY SCHOOLS
MONTHLY DISBURSEMENT REPORT
For the month of JULY 2021

Check #	Date	Vendor	Description	Amount
43212	7/12/2021	Abante Marketing	supplies	$1,368.05
43213	7/12/2021	Acco Brands USA LLC	Supplies	$7,384.93
43214	7/12/2021	Advanced Fire & Safety, Inc.	extinguishers/services	$1,018.41
43215	7/12/2021	Albers All Around	Repairs	$612.50
43216	7/12/2021	Julie Albers	Mileage	$1,195.17
43217	7/12/2021	Aluminum Athletic Equipment Co.	supplies	$45.00
43218	7/12/2021	Apple Computer, Inc.	iPads	$41,502.60
43219	7/12/2021	B&B Welding and Repair, LLC	Batting cages	$600.60
43220	7/12/2021	Black Hills Energy	natural gas	$66.99
43221	7/12/2021	Blick Art Materials	supplies	$231.59
43222	7/12/2021	BOMGAARS	Supplies	$750.48
43223	7/12/2021	BSN Sports LLC	supplies	$631.23
43224	7/12/2021	Camcode	supplies	$451.80
43225	7/12/2021	Carrier Enterprise, LLC	supplies	$108.70
43226	7/12/2021	Cascade School Supplies	Supplies	$1,918.11
43227	7/12/2021	Casey's Business MasterCard	fuel	$194.64
43228	7/12/2021	Cenex Fleetcard	fuel	$372.06
43229	7/12/2021	CenturyLink	phone	$193.64
43230	7/12/2021	CenturyLink	phone	$2,626.56
43231	7/12/2021	Central Nebraska Rehab Services	OT/PT services	$10,310.25
43232	7/12/2021	Computers Etc	supplies	$31.00
43233	7/12/2021	Continental Fire Sprinkler Company	Annual backflow inspection	$540.00
43234	7/12/2021	Cornhusker Public Power District	electricity	$707.06
43235	7/12/2021	Culligan Water Conditioning	soft water plan	$83.10
43236	7/12/2021	David City Public School	Hlavac insurance	$957.95
43237	7/12/2021	Demco	supplies	$250.14
43238	7/12/2021	Dennis Supply Comp-Sioux City	MS compressor	$813.96
43239	7/12/2021	Department Of Utilities	utilities	$38,469.30
43240	7/12/2021	Eakes Office Products Center	copies/leases	$16,543.32
43241	7/12/2021	Ellevation, Inc.	Math support	$12,000.00
43242	7/12/2021	Educational Serv Unit #7 Network	tech support	$293.75
43243	7/12/2021	Educational Service Unit 7	supplies	$11.47
43244	7/12/2021	ESU #7 Special Education	SPED services	$103,773.58
43245	7/12/2021	Education Service Unit #7	SRS billing	$4,508.00
43246	7/12/2021	Educational Service Unit #9	Science retreat	$175.00
43247	7/12/2021	Flinn Scientific	supplies	$298.88
43248	7/12/2021	Flippen Group	Profess Development	$12,000.00
43249	7/12/2021	FP Mailing Solutions	postage meter fees	$291.00
43250	7/12/2021	Frontier	phone	$106.21
43251	7/12/2021	Fulcrum Management Solutions, Inc.	Team Room contract	$26,460.00
43252	7/12/2021	The Glass Edge, Inc.	Weight room mirrors	$6,176.00
43253	7/12/2021	The Prophet Corp	supplies	$1,192.23
43254	7/12/2021	Hometown Leasing	copier lease	$7,731.32
43255	7/12/2021	Jackson Services Inc	linens	$1,189.69
43256	7/12/2021	Johnstone Supply	supplies	$10.77
43257	7/12/2021	Jostens, Inc	diploma	$28.10

43258	7/12/2021	Junior Library Guild	HS library books	$832.00
43259	7/12/2021	KaTom Restaurant Supply	kitchen appliances	$2,839.61
43260	7/12/2021	Galen Kluck	Annual tower fee	$60.00
43261	7/12/2021	Kroeger Body Shop	repair	$175.00
43262	7/12/2021	Lakeshore Learning Materials	Supplies	$246.93
43263	7/12/2021	Lincoln Journal Star	Notices	$295.02
43264	7/12/2021	Matheson Trigas	Ag supplies	$100.15
43265	7/12/2021	Menards	supplies	$119.82
43266	7/12/2021	Mueller Sprinklers	Repairs	$421.91
43267	7/12/2021	Musician's Friend	Music supplies	$373.82
43268	7/12/2021	National Association for Bilingual Education	NABE conference	$950.00
43269	7/12/2021	Nebr Assoc Of School Boards	NAEP workshop	$120.00
43270	7/12/2021	Nebraska Public Health Environmental Laborato	Water testing	$30.00
43271	7/12/2021	Jesse Neesen	Contracted services	$292.50
43272	7/12/2021	Dean Novak	Annual easement fee	$240.00
43273	7/12/2021	One Office Solution	postage meters	$566.98
43274	7/12/2021	One Source	Background checks	$305.00
43275	7/12/2021	OPTK Networks	Ethernet	$171.12
43276	7/12/2021	Paper Tiger Shredding	Shredding	$197.40
43277	7/12/2021	Parkview One Stop LLC	fuel	$174.93
43278	7/12/2021	PEAP	Supplies	$623.76
43279	7/12/2021	Perry, Guthery, Hasse & Gessford, P.C., L.L.O	Legal services	$968.20
43280	7/12/2021	Plank Road Publishing Inc	Music supplies	$292.23
43281	7/12/2021	Presto-X	pest control	$341.00
43282	7/12/2021	Progress Publications	supplies	$90.00
43283	7/12/2021	Pro Track and Tennis, Inc	Resurface track	$112,300.00
43284	7/12/2021	Pyramid School Products	supplies	$6,932.71
43285	7/12/2021	QC Supply, LLC	supplies	$120.98
43286	7/12/2021	Rapids Wholesale, Inc.	supplies	$220.22
43287	7/12/2021	Rasmussen Mechanical Services	Repair supplies	$680.68
43288	7/12/2021	Reinecke Motor Co.	Repairs	$92.96
43289	7/12/2021	Renaissance	1/2 of 3 yr subscription	$155,263.04
43290	7/12/2021	Retirement Plan Consultants LLC	Annual admin fee	$995.00
43291	7/12/2021	School Specialty, LLC	Supplies	$2,440.49
43292	7/12/2021	Schuyler Home & Building Supply	Supplies	$883.59
43293	7/12/2021	Shaper Tools, Inc.	Shop tools	$3,350.00
43294	7/12/2021	Staples	Supplies	$846.08
43295	7/12/2021	Teacher Innovations, Inc	12 mo subscription	$924.00
43296	7/12/2021	The Columbus Telegram	Subscription	$351.00
43297	7/12/2021	TROX CDI Dallas LLC	Supplies	$114.65
43298	7/12/2021	Twig Education Inc	Science books	$11,983.49
43299	7/12/2021	U.S. Toy CO/Constructive Playthings	supplies	$57.90
43300	7/12/2021	Verizon Wireless	Cell phones	$650.96
43301	7/12/2021	Visa	Supplies	$463.00
43302	7/12/2021	VISA	Supplies	$265.00
43303	7/12/2021	WageWorks	Adminstrative fees	$205.00
43304	7/12/2021	Brad Waid	Speaking deposit	$1,500.00
43305	7/12/2021	Waste Connections of NE, Inc.	Sanitation services	$1,081.50
43306	7/12/2021	West Music	Music supplies	$86.05
43307	7/12/2021	William V. Macgill & Co	Supplies	$1,185.90

00721-01	7/13/2021 Dan Hoesing	phone stipend	$240.00
TOTAL GENERAL FUND DISBURSEMENTS			**$620,286.72**
1461	7/12/2021 Department Of Utilities	Storm sewer reroute	$282,100.00
TOTAL SPECIAL BUILDING FUND DISBURSEMENTS			**$282,100.00**
167	7/12/2021 SCS Building Fund Money Market Account	interfund loan	$300,000.00
TOTAL QCPUF FUND DISBURSEMENTS			**$300,000.00**

SCHUYLER COMMUNITY SCHOOLS
MONTHLY DISBURSEMENT REPORT over $5000
For the month of JULY 2021

Check #	Date	Vendor	Description	Amount
43289	7/12/2021	Renaissance	1/2 of 3 yr subscription	$155,263.04
43283	7/12/2021	Pro Track and Tennis, Inc	Resurface track	$112,300.00
43244	7/12/2021	ESU #7 Special Education	SPED services	$103,773.58
43218	7/12/2021	Apple Computer, Inc.	iPads	$41,502.60
43239	7/12/2021	Department Of Utilities	utilities	$38,469.30
43251	7/12/2021	Fulcrum Management Solutions, Inc.	Team Room contract	$26,460.00
43240	7/12/2021	Eakes Office Products Center	copies/leases	$16,543.32
43241	7/12/2021	Ellevation, Inc.	Math support	$12,000.00
43248	7/12/2021	Flippen Group	Profess Development	$12,000.00
43298	7/12/2021	Twig Education Inc	Science books	$11,983.49
43231	7/12/2021	Central Nebraska Rehab Services	OT/PT services	$10,310.25
43254	7/12/2021	Hometown Leasing	copier lease	$7,731.32
43213	7/12/2021	Acco Brands USA LLC	Supplies	$7,384.93
43284	7/12/2021	Pyramid School Products	supplies	$6,932.71
43252	7/12/2021	The Glass Edge, Inc.	Weight room mirrors	$6,176.00
TOTAL GENERAL FUND DISBURSEMENTS				**$568,830.54**
1461	7/12/2021	Department Of Utilities	Storm sewer reroute	$282,100.00
TOTAL SPECIAL BUILDING FUND DISBURSEMENTS				**$282,100.00**
167	7/12/2021	SCS Building Fund Money Market Account	interfund loan	$300,000.00
TOTAL QCPUF FUND DISBURSEMENTS				**$300,000.00**

SCHUYLER COMMUNITY SCHOOLS
Treasurer's Report
Fiscal Year 2021

SCHUYLER COMMUNITY SCHOOLS GENERAL FUND	Jun-21	YTD 2020-2021
Beginning Cash Balance	**6,378,752.50**	**2,286,133.14**
Receipts:		
Colfax county Local District Tax	230,317.91	12,993,954.59
Butler county Local District Tax	174,235.97	1,464,895.02
Interest	500.98	3,596.33
License Fees		600.00
Rent of Facility		0.00
Categorical Grants	1,876.95	28,049.42
Curriculum Receipts		0.00
Other Local Receipts		0.00
Private grants		0.00
ESU Receipts		150.00
State Aid	411,947.00	4,119,434.00
Special Education	234,013.00	895,856.00
SPED Transportation		4,164.00
State Apportionment		233,541.16
Distant Ed Incentive		0.00
Six Pence		238,651.00
Other State Receipts		0.00
High Ability Learner		12,620.00
Title 1 Part A		596,736.00
Title I part B		0.00
Title I, SIG		174,325.42
Title II, Part A - Staff		57,002.00
SPED IDEA Base		0.00
SPED Preschool	4,939.00	4,939.00
SPED IDEA Part B BASE Enrollment/Poverty		379,013.00
SPED IDEA, Part B Enroll		0.00
SPED Ed IDEA CEIS		0.00
SPED non public		0.00
Medicaid in the Public Schools - MIPS	25,370.32	60,574.42
NASB MEDICAID Reimbursements	7,700.99	26,618.20
Carl Perkins Fund		0.00
E-Rate Reimbursement		0.00
Migrant		0.00
Title III		68,116.00
Title III Immigrant		4,045.00
Peak ILCD/other grants		500.00
21st Century Grant		124,512.00
Title IV A SSAE Grant		37,738.00
EducationQuest Grant		0.00
ESSERS I		502,781.00
ESSERS II		0.00
Insurance Adjustments		0.00
Sale of Property		0.00
Other Non Revenue		107.65
Transfers in		0.00
Total Receipts	**1,090,902.12**	**22,032,519.21**
Non-program Receipts		
Non-program Receipts		8,897.09
Lunch & Coop Fund Reimbursements	34,813.77	362,304.32
Subtotal	**34,813.77**	**371,201.41**
Transfers from CD		
Transfers IN/OUT Money Market Accounts		0.00

Total Receipts & Transfers	**1,125,715.89**	**22,403,720.62**
General Fund Cash	**7,504,468.39**	**24,689,853.76**
General Fund Disbursements	-2,148,466.54	-19,333,851.91
Transfers In/Out Money Market Accounts		0.00
Prior Period Adjustment (Voided Checks)		0.00
Total Disbursements	**-2,148,466.54**	**-19,333,851.91**
GENERAL FUND Cash Balance	**5,356,001.85**	**5,356,001.85**

SPECIAL BUILDING FUND		
Beginning Cash Balance	**72,395.13**	**2,058,408.16**
Colfax County Tax Collection	-4.40	399.10
Butler County Tax Collection	3.27	6.42
School Project Support Donations		0.00
Sale of Property		0.00
Interest	1.45	544.64
2019 HS Bonds sold		0.00
Sale of Property		158,926.33
Non-revenue receipts		0.00
Total before non-program receipts	**0.32**	**159,876.49**
Non-program Receipts/transfers		0.00
Total Monthly Receipts		
Cashed CD's		0.00
Total Building Fund Cash	**72,395.45**	**2,218,284.65**
Disbursements & Transfers:		
Total Expenditures	**(15765.17)**	-2161654.37
Non-program Expenditures		0.00
Total Disbursements	**(15,765.17)**	**-2161654.37**
Special Building Fund Ending Balance	**56,630.28**	**56,630.28**

BOND FUND ACCOUNT		
Beginning Balance Pinnacle Bank	**793,757.78**	**444,108.37**
Bond tax collections	26,554.23	1,040,078.23
Interest	31.29	176.34
		0.00
Total	**26,585.52**	**1,040,254.57**
Bond Payment	-186,601.50	-850,591.14
Expenditures		**-30.00**
Balance 2007 bonds	**633,741.80**	**633,741.80**
Beginning Balance - County Treasurer		**0.00**
Old Bond - WW 1993 - Held by Colfax Co Treasurer		0.00
Transfers		0.00
Total Old Bond Balance		**0.00**
Beatrice Bank Holding funds		**0.00**
Total Bond Fund Balance	**633,741.80**	**633,741.80**

DEPRECIATION FUND SAVINGS		
Beginning Balance Checking accounts	**234,886.62**	**314,386.26**
Receipts		250,000.00
Interest on Money Market Accounts	40.16	389.60
Non-program receipts		
Total	**234,926.78**	**564,775.86**
Disbursements	-14,703.80	-344,552.88
Transfers		
Non-program disbursements		
Ending Balance Cash account/Money Market Ac	**220,222.98**	**220,222.98**
DEPRECIATION FUND INVESTMENTS:		
Beginning Balance (800011254, 800012522, 583	**87,142.08**	**87,066.65**
CD's		**0.00**
Interest		**75.43**
Ending Balance Investments	**87,142.08**	**87,142.08**
Total Depreciation Funds	**307,365.06**	**307,365.06**
QUALIFIED CAPITAL PURPOSE BONDS		
Beginning balance	**4,189,793.94**	**4,282,038.80**
PINNACLE BANK (initial deposit+interest)		
Colfax County Tax Collections	5,981.78	434,699.09
Butler County Tax Collections	6,005.02	50,072.81
Interest & Transfers	345.50	4,576.63
US Treasury Receipts	112,415.03	224,830.06
Total Monthly Receipts	**124,747.33**	714,178.59
Transfers		0.00
Payments/Transfer of interest		-119,710.00
Disbursements	-119,210.00	-681,176.12
Fund Balance	**4,195,331.27**	**4,195,331.27**
EMPLOYEE BENEFITS FUND		
Beginning Balance	**79,877.90**	**55,619.08**
Deposits	5,723.93	84,700.09
Total Revenue	**85,601.83**	**140,319.17**
Disbursements & Transfers:	-9,712.14	-64,429.48
Ending Balance	**75,889.69**	**75,889.69**
EMPLOYEE BENEFITS FUND INVESTMENTS:		
Beginning Balance (800010018; 55375)	**13,637.93**	**13,627.60**
SCS CD's Interest		10.33
Ending Balance	**13,637.93**	**13,637.93**
Total Employee Benefits Funds Investments	13,637.93	13,637.93
Total Employee Benefits Funds	**89,527.62**	**89,527.62**

SCS STUDENT FEES

Beginning Balance	**52,354.70**	**94,122.64**
Receipts	0.00	12,552.76
Total	**52,354.70**	**106,675.40**
Disbursements	-576.00	-54,896.70
Ending Balance	**51,778.70**	**51,778.70**

SCS ACTIVITY FUND

Beginning Balance	**471,185.55**	**338,022.23**
Receipts	19,778.63	433,001.48
Total	**490,964.18**	**771,023.71**
Disbursements	-29,161.59	-309,221.12
Ending Balance	**461,802.59**	**461,802.59**

Lunch Fund

Beginning Balance Checking accounts	**407,155.89**	**341,098.92**
Receipts	101,641.27	1,256,430.94
Interest	3.92	40.81
non-program receipts		0.00
Total Cash	**508,801.08**	**1,597,570.67**
Disbursements	-112,801.32	-1,201,570.91
non-program expenses		0.00
Total Expenditures	-112,801.32	-1,201,570.91
Total Lunch Funds	**395,999.76**	**395,999.76**

SCS COOPERATIVE FUND

Beginning Balance	**6,742.66**	**6,630.27**
Receipts	0.00	41,835.41
Total	**6,742.66**	**48,465.68**
Disbursements	-4,641.19	-46,364.21
Ending Balance	**2,101.47**	**2,101.47**

Submitted By:

Charles P. Misek, Treasurer

SCHUYLER COMMUNITY SCHOOLS

Revenue Summary Report

FY 2021

For the Month of JUNE 2021

Account	BUDGET 2020-21	Jun-21	2020-21 YTD TOTALS	Percent Collected
Tax Collections	14,784,334.00	404,553.88	14,458,849.61	97.80%
Tuition Rec'd Other Districts	-		-	0.00%
Interest earned on Local Receipts	1,000.00	500.98	3,596.33	359.63%
CD Interest	7,500.00		-	0.00%
License Fee	3,500.00		600.00	17.14%
Community Service Activities	3,000.00		-	0.00%
Grants from Corp & other private	-	1,876.95	28,049.42	
Other Local Receipts	19,118.00		-	0.00%
ESU Receipts	2,000.00		150.00	7.50%
State Aid	4,119,430.00	411,947.00	4,119,434.00	100.00%
Sp Ed Programs	558,000.00	234,013.00	895,856.00	160.55%
Sp Ed Transportation	4,000.00		4,164.00	104.10%
State Apportionment	200,482.00		233,541.16	116.49%
Other State/Distance Learning Education			-	
High Ability Learner	6,500.00		12,620.00	194.15%
Six Pence	335,000.00		238,651.00	71.24%
Other State	5,000.00		-	0.00%
Title I, Part A	200,000.00		596,736.00	0.00%
Title I, part B	400,000.00		-	0.00%
Title I - School Improvement Grant	352,921.00		174,325.42	0.00%
Title IIA	140,000.00		57,002.00	40.72%
Title IIA, ESU7 Consortium	-		-	0.00%
IDEA, to age 5	82,576.00		-	0.00%
Sp Ed - Base	250,000.00	4,939.00	4,939.00	1.98%
IDEA Part B Base Enrollment Poverty				
Sp Ed-Part B Funds Enrollment	47,595.00		-	0.00%
Sp Ed - CEIS	45,000.00		-	0.00%
Sp Ed - Non public			-	0.00%
Medicaid in Public schools	10,000.00	25,370.32	60,574.42	0.00%
NASB NEBMAC MEDICAID	40,000.00	7,700.99	26,618.20	66.55%
Carl Perkins	5,000.00		-	0.00%
E-Rate Reimbursement	57,000.00		-	0.00%
Migrant	-		-	
Title III	80,000.00		68,116.00	85.15%
Title III Immigrant	4,575.00		4,045.00	88.42%
Peak ILCD/other grants	425.00		500.00	117.65%
21st Century Grant	272,109.00		124,512.00	45.76%
Title IV-A SSAE	-		37,738.00	
ESSERS I	-		502,781.00	
Education Quest	-		-	0.00%
Scott Grant - Child Well Being			-	
Debt Services			-	0.00%
Insurance Adjustments	-		-	0.00%
Sale of Property	-		-	0.00%
Other Non Revenue Receipts			107.65	0.00%
Total Program Receipts	**22,036,065.00**	**1,090,902.12**	**21,653,506.21**	98.26%
Non Program Receipts				
Non Program Receipts	-		8,897.09	
Lunch, Coop Payroll or Reimb	-	34,813.77	362,304.32	
	-			

Total Receipts	**22,036,065.00**	**1,125,715.89**	**22,024,707.62**	
Total Budgeted Beginning Cash	2,286,133.14			
Total Resources Available	**24,322,198.14**			
Audit adjustments				
OTHER FUND RECEIPTS				
Depreciation Fund Receipts	448,547.09	40.16		0.00%
Employee Benefits Fund Receipts	145,560.00	5,723.93		
Qualified Capital Purpose Fund	500,000.00	124,747.33		0.00%
Activities Fund Receipts	600,000.00	19,778.63		0.00%
Lunch Fund Receipts	1,225,000.00	101,645.19		0.00%
Bond Fund	500,000.00	26,585.52		0.00%
Special Bldg Fund	150,000.00	0.32		0.00%
Cooperative Fund	100,000.00	-		0.00%
Student Fee Receipts	30,000.00	-		0.00%
TOTAL OTHER FUND RECEIPTS	**3,699,107.09**	**278,521.08**	**-**	
Beginning Balances	19,007,285.61			
TOTAL SCS FUND RECEIPTS	**47,028,590.84**	**1,404,236.97**	**22,024,707.62**	
Transfer				
General Fund	-		-	
Depreciation Fund			-	
Employee Benefits			-	
Qualified Capital Purpose Fund			-	
Activity Fund			-	
Lunch Fund			-	
Bond Fund			-	
Special Building Fund			-	
Cooperative Fund				
Student Fees Fund			-	
TOTAL TRANSFERS		**-**	**-**	
TOTAL SCS RECEIPTS WITH TRANSFERS		**1,404,236.97**	**22,024,707.62**	

SCHUYLER COMMUNITY SCHOOLS
EXPENDITURE SUMMARY
FISCAL YEAR 2021
Monthly Expenditures

Account	2020-21 Budget	Jun-21	YTD 2020-21	Percent 2020-21
Regular Instructional Programs	12,049,546.00	1,046,938.60	9,844,560.56	81.70%
Special Education Instructional Programs	1,048,005.00	163,468.04	1,685,343.78	160.81%
Summer School	42,000.00	355.68	355.68	0.85%
Support Services-Pupils	950,000.00	73,059.33	489,508.33	51.53%
OT/PT/Speech/Vision	250,000.00	51,727.32	260,068.86	104.03%
Support Services-Staff	692,415.00	84,514.00	907,705.70	131.09%
General Administration	500,000.00	31,515.09	343,115.23	92.57%
Office Of The Principal	1,100,000.00	99,605.93	1,018,231.38	87.10%
Support Services-Business	200,800.00	16,180.85	174,892.83	87.10%
Furniture and Equipment	36,400.00	-	2,623.98	7.21%
Personnel Services	10,000.00	-	14,770.71	147.71%
Support Services-Maintenance & Operation	1,928,256.00	141,172.19	1,858,840.47	96.40%
Support Services-Pupil Transportation	225,320.00	23,668.87	170,179.55	75.53%
Community Services	90,000.00	5,077.10	55,588.05	61.76%
State Categorical Programs	385,400.00	31,120.14	352,269.47	91.40%
Federal Programs	2,195,423.00	345,249.63	1,789,343.63	81.50%
Debt Service	232,500.00		-	0.00%
Transfers	100,000.00		-	0.00%
Total Program Expenditures	**22,036,065.00**	**2,113,652.77**	**18,967,398.21**	**86.07%**
Non Prog. Expenditures - Misc			4,149.38	
Non Prog. Expenditures - Lunch & Coop		34,813.77	362,304.32	
Total Expenditures	**22,036,065.00**	**2,148,466.54**	**19,333,851.91**	
Budgeted Cash Reserve	3,000,000.00			
Total Requirements	**25,036,065.00**	**2,148,466.54**	**19,333,851.91**	
OTHER FUND DISBURSEMENTS				
Depreciation Fund Disbursements	850,000.00	14,703.80	344,552.88	40.54%
Employee Benefits Fund Disbursements	145,560.00	9,712.14	64,429.48	44.26%
Qualified Capital Purpose Fund	4,840,000.00	119,210.00	800,886.12	16.55%
Activities Fund Disbursements	600,000.00	29,161.59	309,221.12	51.54%
Lunch Fund Disbursements	1,225,000.00	112,801.32	1,201,570.91	98.09%
Bond Fund	1,675,000.00	186,601.50	850,621.14	50.78%
Special Bldg Fund Disbursements	3,500,000.00	15,765.17	2,161,654.37	61.76%
Cooperative	150,000.00	4,641.19	46,364.21	30.91%
Student Fee Disbursements	90,000.00	576.00	54,896.70	61.00%
	13,075,560.00	493,172.71	5,834,196.93	44.62%
Other fund Cash Reserves				
TOTAL DISTRICT'S DISBURSEMENTS	**38,111,625.00**	**2,641,639.25**	**25,168,048.84**	
Transfer funds				
General Fund		-	-	
Depreciation Fund		-	-	
Employee Benefits		-	-	
Qualified Capital Purpose Fund		-	-	
Activity Fund		-	-	
Lunch Fund Transfers		-	-	
Bond Fund		-	-	
Special Building Fund		-	-	
Cooperative Fund		-	-	
Student Fees Fund		-	-	
Transfer funds		-	-	
TOTAL DISTRICT EXPENDITURES		**2,641,639.25**	**25,168,048.84**	

SCHUYLER COMMUNITY SCHOOLS
LUNCH PROGRAM
BUDGET TO ACTUAL
FISCAL YEAR 2021

Receipts:	**Budget 2020-2021**	**June 2021**	**YTD Actual 2020-2021**	**% of Budget**
Sale of Meals	100,901.08	-15.25	26,751.03	26.51%
Interest	500.00	3.92	40.81	8.16%
State Reimbursement	7,000.00		8,976.59	128.24%
Federal Reimbursement	775,000.00	101,656.52	1,212,373.69	156.44%
Other Income	500.00		6,218.79	1243.76%
Other Non-Revenue Income	0.00		0.00	
Transfer	0.00		0.00	
Non-program receipts	0.00		0.00	0.00%
Total Receipts	**883,901.08**	**101,645.19**	**1,254,360.91**	**141.91%**
Beginning Cash	341,098.92			
Transfer between accts				
Total Receipts & Beg. Cash	**1,225,000.00**			
Expenditures				
Regular Salaries	321,000.00	28,758.02	292,906.37	91.25%
Substitute Salaries	15,000.00	3,004.32	42,427.77	282.85%
Employee Benefits	160,500.00	16,848.09	164,778.86	102.67%
Contracted Services	1,000.00		0.00	0.00%
Gas & Van Service	1,500.00	78.45	906.55	60.44%
Food	620,000.00	45,681.32	559,906.71	90.31%
Software	5,000.00	9,155.75	9,155.75	183.12%
Supplies & Materials	30,000.00	4,521.76	71,806.45	239.35%
Equipment	60,000.00	4,258.09	51,756.61	86.26%
Equipment Repair	8,000.00	401.51	4,439.93	55.50%
Miscellaneous	3,000.00	94.01	842.92	28.10%
Non-program Expenditures	0.00		532.15	
Total Expenditures	**1,225,000.00**	**112,801.32**	**1,199,460.07**	**97.92%**
Necessary Cash Reserves	**0.00**			
TOTAL REQUIREMENTS	**1,225,000.00**			
Transfers back between accts				
Revenue over Expenses		**-11,156.13**	**54,900.84**	

Current Cash Balance

Sorted by Site ID, Group ID, Activity ID.
From 06/01/2021 to 06/30/2021.

Site ID Site Name
Group ID Group Name

Activity ID	Activity Name	Beginning Cash	Receipts	Disbursements	Adjustments	Cash Balance
SCHUYL	Schuyler Community Schools					
A	ACADEMIC					
1100	CONSORTIUM PAYROLL	232.84	0.00	0.00	0.00	232.84
1500	ARC EQUIP SPEC.ED.	634.43	0.00	0.00	0.00	634.43
	A Totals:	867.27	0.00	0.00	0.00	867.27
B	ATHLETIC					
2100	BASKETBALL B	-3,274.57	0.00	0.00	0.00	-3,274.57
2150	BASKETBALL G	-2,982.14	0.00	0.00	0.00	-2,982.14
2200	CROSS COUNTRY B & G	-100.00	0.00	0.00	0.00	-100.00
2250	CROSS COUNTRY	0.00	0.00	0.00	0.00	0.00
2300	FOOTBALL	-112.50	0.00	603.80	0.00	-716.30
2350	GOLF B	-1,207.50	0.00	0.00	0.00	-1,207.50
2375	GOLF G	-345.00	0.00	0.00	0.00	-345.00
2400	SOFTBALL	0.00	0.00	0.00	0.00	0.00
2450	SOCCER B	-2,713.81	0.00	0.00	0.00	-2,713.81
2500	SOCCER G	-2,100.00	0.00	0.00	0.00	-2,100.00
2600	TRACK	-8,932.01	0.00	0.00	0.00	-8,932.01
2700	VOLLEYBALL	-50.00	0.00	0.00	0.00	-50.00
2750	WRESTLING	-6,329.39	0.00	0.00	0.00	-6,329.39
2755	WEIGHT ROOM EQUIPMENT	362.86	0.00	0.00	0.00	362.86
2800	SMS ATHLETICS	-285.54	0.00	326.40	0.00	-611.94
2850	LAUNDRY	0.00	0.00	0.00	0.00	0.00
2900	GENERAL	13,645.37	25.00	905.77	0.00	12,764.60
2950	MEDICAL	-104.56	0.00	0.00	0.00	-104.56
2970	BOOSTER CLUB DONATION	-889.47	0.00	0.00	0.00	-889.47
2975	DONATIONS	13,346.93	0.00	0.00	0.00	13,346.93
	B Totals:	-2,071.33	25.00	1,835.97	0.00	-3,882.30
C	DISTRICT					
3100	ADULT EDUCATION	0.00	0.00	0.00	0.00	0.00
3110	COLLEGE CREDIT	-50,091.92	0.00	0.00	0.00	-50,091.92
3200	GENERAL	5,814.91	1,871.79	49.39	0.00	7,637.31
3250	FIELD HOUSE	21,469.83	110.00	0.00	0.00	21,579.83
3300	FINES	1,268.22	0.00	0.00	0.00	1,268.22
3400	HIGH SCHOOL--- BOOK FINES	0.00	0.00	0.00	0.00	0.00
3450	SCHS LIBRARY FINES	888.81	0.00	0.00	0.00	888.81
	C Totals:	-20,650.15	1,981.79	49.39	0.00	-18,717.75
D	DEPARTMENTS					
4000	BAND	1,297.69	0.00	0.00	0.00	1,297.69
4025	Musical	3,645.16	0.00	0.00	0.00	3,645.16
4050	VOCAL	226.87	0.00	0.00	0.00	226.87
4750	KOEHN TRUST (BAND DONATION)	12,534.62	0.00	1,104.00	0.00	11,430.62
	D Totals:	17,704.34	0.00	1,104.00	0.00	16,600.34

Current Cash Balance

Sorted by Site ID, Group ID, Activity ID.
From 06/01/2021 to 06/30/2021.

Site ID Site Name
Group ID Group Name

	Activity ID	Activity Name	Beginning Cash	Receipts	Disbursements	Adjustments	Cash Balance
E	UNIFORMS & EQUIPMENT						
	4500	BAND (UNIFORM DEP)	828.18	0.00	0.00	0.00	828.18
	4650	FLAG CORPS	808.28	0.00	0.00	0.00	808.28
	4700	INSTRUMENT RENTAL	0.00	0.00	0.00	0.00	0.00
	4770	AMBASSADORS	1,637.88	0.00	0.00	0.00	1,637.88
		E Totals:	3,274.34	0.00	0.00	0.00	3,274.34

Current Cash Balance

Sorted by Site ID, Group ID, Activity ID.

From 06/01/2021 to 06/30/2021.

Site ID Site Name

Group ID Group Name

	Activity ID	Activity Name	Beginning Cash	Receipts	Disbursements	Adjustments	Cash Balance
F	CLUBS ORGANIZATIONS						
	5000	ART	681.73	0.00	0.00	0.00	681.73
	5005	ATHS	0.00	0.00	0.00	0.00	0.00
	5050	CHEERLEADERS	15,577.31	1,912.55	4,136.00	0.00	13,353.86
	5100	DRAMATICS, SPEECH	85.00	0.00	50.00	0.00	35.00
	5105	One Act	1,039.79	0.00	0.00	0.00	1,039.79
	5150	DANCE TEAM	1,517.99	0.00	6,966.00	0.00	-5,448.01
	5175	EMERGENCY RESPNSE TEAM	0.00	0.00	0.00	0.00	0.00
	5200	FFA	15,984.90	0.00	0.00	0.00	15,984.90
	5250	FCCLA	1,279.69	38.00	195.47	0.00	1,122.22
	5300	CULTURAL UNITY	1,105.02	0.00	0.00	0.00	1,105.02
	5350	NATIONAL HONOR SOCIETY	1,772.49	0.00	0.00	0.00	1,772.49
	5400	S-CLUB	156.45	0.00	0.00	0.00	156.45
	5405	SPIRIT CLUB	0.00	0.00	0.00	0.00	0.00
	5425	WARRIORS STAND FOR THE SILENT	0.00	0.00	0.00	0.00	0.00
	5500	SCIENCE & mATH cLUB	5,646.03	0.00	0.00	0.00	5,646.03
	5510	SCIENCE TRIP	0.00	0.00	0.00	0.00	0.00
	5515	INDUST. TECH GRANT SCHS	2,000.00	0.00	0.00	0.00	2,000.00
	5525	SCIENCE FAIR	0.00	0.00	0.00	0.00	0.00
	5550	STUDENT COUNCIL	5,029.65	0.00	0.00	0.00	5,029.65
	5575	504 R ACTIVITY FUND	0.00	0.00	0.00	0.00	0.00
	5600	RICHLAND ACTIVITY FUND	340.07	0.00	7.93	0.00	332.14
	5610	FISHER 24 ACTIVITY FUND	6,586.31	0.00	195.81	0.00	6,390.50
	5620	SCHUYLER ELEMENTARY SCHOOL	594.72	0.00	74.98	0.00	519.74
	5621	SES FELICIATIONS	0.00	0.00	0.00	0.00	0.00
	5622	SES FIELD DAY	8,492.63	0.00	129.82	0.00	8,362.81
	5623	SES Vocal Music Club	1,135.60	0.00	0.00	0.00	1,135.60
	5624	SES LIBRARY	2,469.64	295.00	0.00	0.00	2,764.64
	5631	SES POP FUND	0.00	0.00	0.00	0.00	0.00
	5632	SES Band CLUB	237.90	0.00	0.00	0.00	237.90
	5633	SES STEM	6,308.59	0.00	0.00	0.00	6,308.59
	5650	BRAINSTORMING	0.00	0.00	0.00	0.00	0.00
	5675	TEEN MOM'S	0.00	0.00	0.00	0.00	0.00
	5700	A.S.K.	1,282.99	0.00	0.00	0.00	1,282.99
	5725	STUDENT COUNCIL MAKE A WISH	2,094.37	0.00	0.00	0.00	2,094.37
	5750	FELLOWSHIP CHRISTIANS FOR ATHLETICS	0.00	0.00	0.00	0.00	0.00
	5775	INDUSTRIAL TECH ACCOUNT	0.00	0.00	0.00	0.00	0.00
	5800	SHEEL CREEK WATER TESTING	0.00	0.00	0.00	0.00	0.00
	5825	PRESCHOOL	612.46	0.00	129.84	0.00	482.62
	5900	SMS GENERAL ACTIVITY	641.01	0.00	172.22	0.00	468.79
	5901	SMS STUDENT COUNCIL	10,768.19	0.00	0.00	0.00	10,768.19
	5902	SMS LIBRARY	3,194.40	0.00	0.00	0.00	3,194.40
	5903	SMS RESOURCE ROOM	4,680.90	0.00	0.00	0.00	4,680.90
	5904	SMS BAND CLUB	301.18	0.00	0.00	0.00	301.18
	5905	SMS TEACHER POP 7702463	167.00	0.00	0.00	0.00	167.00

Current Cash Balance

Sorted by Site ID, Group ID, Activity ID.
From 06/01/2021 to 06/30/2021.

Site ID Site Name
Group ID Group Name

Activity ID	Activity Name	Beginning Cash	Receipts	Disbursements	Adjustments	Cash Balance
5906	SMS EDUCATIONQUEST FOUNDATION GRANT	0.00	0.00	0.00	0.00	0.00
5907	SMS Entrepreneurship	0.00	0.00	0.00	0.00	0.00
5909	SMS VOCAL MUSIC	3.25	0.00	0.00	0.00	3.25
5910	SMS VOLLEYBALL CLUB	425.39	0.00	0.00	0.00	425.39
5911	SMS YEARBOOK	474.88	0.00	0.00	0.00	474.88
5915	SMS WRESTLING CLUB	366.20	0.00	0.00	0.00	366.20
5920	SMS FOOTBALL CLUB	43.53	0.00	0.00	0.00	43.53
5925	SMS BOYS BASKETBALL CLUB	475.53	0.00	0.00	0.00	475.53
5926	SMS GIRLS BASKETBALL	0.00	0.00	0.00	0.00	0.00
5930	YOUTH FOOTBALL	0.00	0.00	0.00	0.00	0.00
5935	YOUTH SPORTS	-842.45	0.00	213.84	0.00	-1,056.29
	F Totals:	102,730.34	2,245.55	12,271.91	0.00	92,703.98
G	CONCESSION/VENDING					
6000	CONCESSION	2,944.67	0.00	0.00	0.00	2,944.67
6010	Imp. Fund-10%	198.72	0.00	0.00	0.00	198.72
6100	SCHS PEPSI 7701503	9,883.40	0.00	0.00	0.00	9,883.40
6125	SCHS LUNCH PEPSI	0.00	0.00	0.00	0.00	0.00
6150	SCS FIELD HOUSE POP	3,128.89	0.00	0.00	0.00	3,128.89
6200	STUDENT POP	992.22	0.00	0.00	0.00	992.22
6300	TEACHER POP	4,998.71	0.00	335.45	0.00	4,663.26
6400	S-CLUB JUICE	8.40	0.00	0.00	0.00	8.40
6500	MAINTENANCE	8,241.70	0.00	0.00	0.00	8,241.70
6600	MILK MACHINE - FCCLA	0.00	0.00	0.00	0.00	0.00
	G Totals:	30,396.71	0.00	335.45	0.00	30,061.26

Current Cash Balance

Sorted by Site ID, Group ID, Activity ID.
From 06/01/2021 to 06/30/2021.

Site ID Site Name
Group ID Group Name

Group ID	Activity ID	Activity Name	Beginning Cash	Receipts	Disbursements	Adjustments	Cash Balance
H	SALES						
	7000	HORTICULTURE	13,166.56	358.00	155.36	0.00	13,369.20
	7010	HOUSE CONSTRUCTION	1,208.68	0.00	0.00	0.00	1,208.68
	7020	HOUSE RENTAL	27,513.38	0.00	0.00	0.00	27,513.38
	7050	INDUSTRIAL TECH / PLASMA CAM SALES	4,245.64	0.00	0.00	0.00	4,245.64
	7150	BBB CLUB ACCOUNT	499.55	0.00	0.00	0.00	499.55
	7200	GBB CLUB ACCOUNT	718.96	0.00	0.00	0.00	718.96
	7215	BOYS GOLF CLUB ACCT.	3,793.08	0.00	0.00	0.00	3,793.08
	7225	GIRLS GOLF CLUB ACCOUNT	1,849.63	0.00	0.00	0.00	1,849.63
	7250	WRESTLING CLUB ACCOUNT	5,346.56	0.00	444.15	0.00	4,902.41
	7275	WRESTLING AIDS	385.83	0.00	0.00	0.00	385.83
	7300	BSOC CLUB ACCOUNT	2,892.90	0.00	306.32	0.00	2,586.58
	7325	GSOC CLUB ACCOUNT	4,379.43	0.00	581.37	0.00	3,798.06
	7350	G/B CROSS COUNTRY CLUB	1,367.56	0.00	0.00	0.00	1,367.56
	7400	FOOTBALL CLUB ACCOUNT	4,164.43	0.00	180.00	0.00	3,984.43
	7450	VOLLEYBALL CLUB ACCT.	10,116.42	0.00	0.00	0.00	10,116.42
	7500	SB CLUB ACCOUNT	1,188.17	0.00	0.00	0.00	1,188.17
	7550	STUDENT PURCHASES	218.72	0.00	0.00	0.00	218.72
	7600	TR. CLUB ACCT	2,585.22	0.00	0.00	0.00	2,585.22
		H Totals:	85,640.72	358.00	1,667.20	0.00	84,331.52
I	CLASSES						
	8000	ALUMNI ACCOUNT	1,386.24	0.00	0.00	0.00	1,386.24
	8255	CLASSES OF 2013	0.00	0.00	0.00	0.00	0.00
	8260	CLASS 2014	0.00	0.00	0.00	0.00	0.00
	8265	CLASS OF 2015	0.00	0.00	0.00	0.00	0.00
	8270	CLASS OF 2016	0.00	0.00	0.00	0.00	0.00
	8275	CLASS OF 2017	0.00	0.00	0.00	0.00	0.00
	8280	CLASS 2018	0.00	0.00	0.00	0.00	0.00
	8285	CLASS OF 2019	0.00	0.00	0.00	0.00	0.00
	8290	CLASS OF 2020	0.00	0.00	0.00	0.00	0.00
	8295	CLASS OF 2021	108.13	0.00	0.00	0.00	108.13
	8300	Class of 2022	1,266.33	0.00	170.00	0.00	1,096.33
	8305	CLASS OF 2023	-15.13	0.00	0.00	0.00	-15.13
	8310	CLASS OF 2024	80.65	0.00	0.00	0.00	80.65
	8315	CLASS OF 2025	0.00	0.00	0.00	0.00	0.00
	8320	CLASS OF 2026	561.53	0.00	0.00	0.00	561.53
	8325	CLASS OF 2027	547.26	0.00	0.00	0.00	547.26
	8330	CLASS OF 2028	570.49	0.00	185.01	0.00	385.48
	8335	CLASS OF 2029	185.01	0.00	93.38	0.00	91.63
	8340	CLASS OF 2030	1,467.19	0.00	0.00	0.00	1,467.19
	8345	CLASS OF 2031	739.39	0.00	14.95	0.00	724.44
	8350	Class of 2032	430.48	0.00	0.00	0.00	430.48
	8355	CLASS OF 2033	0.00	0.00	0.00	0.00	0.00
		I Totals:	7,327.57	0.00	463.34	0.00	6,864.23

Current Cash Balance

Sorted by Site ID, Group ID, Activity ID.
From 06/01/2021 to 06/30/2021.

Site ID Site Name
Group ID Group Name

	Activity ID	Activity Name	Beginning Cash	Receipts	Disbursements	Adjustments	Cash Balance
J	YEARBOOK						
	8560	YEARBOOK	6,083.38	0.00	0.00	0.00	6,083.38
		J Totals:	6,083.38	0.00	0.00	0.00	6,083.38
K	MISCELLANEOUS						
	9000	STUDENT COUNCIL SCHOOL IMPROVMENT FUND	1,304.25	0.00	0.00	0.00	1,304.25
	9025	SAVE THE CHILDREN	300.00	0.00	0.00	0.00	300.00
	9030	AFTERSCHOOL PROGRAM	101,956.55	0.00	125.00	0.00	101,831.55
	9031	BEYOND SCHOOL BELL	56,368.05	15,000.00	10,915.05	0.00	60,453.00
	9035	SIXPENSE	456.12	0.00	0.00	0.00	456.12
	9040	SES BACK PACK PROGRAM	753.27	0.00	0.00	0.00	753.27
	9045	BUILDING HEALTHY RELATIONSHIPS.	8,716.58	0.00	0.00	0.00	8,716.58
	9050	STAFF INSURANCE PURCHASES	718.15	28.29	210.78	0.00	535.66
	9075	KEY DEPOSITS & RENTAL FEES	8,076.25	112.00	0.00	0.00	8,188.25
	9085	PROFESSIONAL DEVELOPMENT	1,152.14	0.00	0.00	0.00	1,152.14
	9095	PARENT INVOLMENT - PRESCHOOL	5,500.00	0.00	0.00	0.00	5,500.00
	9100	BLOOD MOBILE	0.00	0.00	0.00	0.00	0.00
	9105	WELLNESS WARRIORS	4,220.38	0.00	0.00	0.00	4,220.38
	9110	PTO WELLNESS DAY DONATION	8,765.00	0.00	0.00	0.00	8,765.00
	9115	LUNCH CARD	2,446.05	0.00	0.00	0.00	2,446.05
	9125	TMH	0.00	0.00	0.00	0.00	0.00
	9150	PRINCIPAL	314.02	0.00	0.00	0.00	314.02
	9175	Technology Fee	35,423.50	28.00	183.50	0.00	35,268.00
		K Totals:	236,470.31	15,168.29	11,434.33	0.00	240,204.27
L	SCHOLARSHIPS/MEMORIALS						
	9200	TOUR	0.00	0.00	0.00	0.00	0.00
	9500	COLLEGE ACCESS GRANT	3,412.05	0.00	0.00	0.00	3,412.05
		L Totals:	3,412.05	0.00	0.00	0.00	3,412.05
		SCHUYLER Activity Totals:	471,185.55	19,778.63	29,161.59	0.00	461,802.59

	Begin Balance	Transfers	Receipts	Disbursements	Adjustments	End Balance
SCHUYLER Checking:			19,778.63	29,161.59		
SCHUYLER Investment:						
SCHUYLER Bank Balances:	471,185.55		19,778.63	29,161.59	0.00	461,802.59

Report Activity Totals:	471,185.55	19,778.63	29,161.59	0.00	461,802.59

EXPENDITURE REPORT	2013-14	%	2014-15	%	2015-16	%	2016-17	%	2017-18	%	2018-19	%	2019-20	%	2020-21	%
September Total	**$1,617,997.97**	**9.11%**	**$1,586,003.98**	**7.93%**	**$1,546,839.29**	**7.73%**	**$1,539,984.51**	**7.57%**	**$1,543,208.42**	**7.56%**	**$1,682,014.98**	**7.85%**	**$1,776,080.23**	**8.10%**	**$1,912,853.42**	**8.68%**
Payroll and Benefits	$1,283,591.68	8.75%	$1,293,637.93	7.79%	$1,254,278.80	7.56%	$1,406,961.65	8.15%	$1,463,973.67	8.48%	$1,477,573.31	8.23%	$1,552,280.21	8.90%	$1,613,967.73	9.16%
Accounts Payable	$334,406.29	10.83%	$292,366.05	8.60%	$292,560.49	8.60%	$133,022.86	4.31%	$79,234.75	2.53%	$204,441.67	5.87%	$223,800.02	4.97%	$298,885.69	6.75%
October Total	**$1,401,716.38**	**17.00%**	**$1,610,650.56**	**15.98%**	**$1,643,562.29**	**15.95%**	**$1,672,110.74**	**15.78%**	**$1,769,382.25**	**16.24%**	**$1,798,070.83**	**16.23%**	**$1,750,705.33**	**16.08%**	**$1,812,215.99**	**16.90%**
Payroll and Benefits	$1,181,349.20	16.79%	$1,258,567.43	15.37%	$1,308,199.96	15.44%	$1,373,032.01	16.10%	$1,411,494.27	16.66%	$1,418,571.45	16.13%	$1,485,990.30	17.42%	$1,544,950.35	17.94%
Accounts Payable	$220,367.18	17.97%	$352,083.13	18.95%	$335,362.33	18.47%	$299,078.73	14.00%	$357,887.98	13.93%	$379,499.38	16.76%	$264,715.03	10.85%	$267,265.64	12.79%
November Total	**$1,536,909.02**	**25.65%**	**$1,478,880.75**	**23.38%**	**$1,538,076.50**	**23.64%**	**$1,797,062.78**	**24.61%**	**$1,691,421.13**	**24.53%**	**$1,880,881.44**	**25.01%**	**$1,964,465.29**	**25.03%**	**$2,112,287.67**	**26.49%**
Payroll and Benefits	$1,198,104.30	24.96%	$1,271,292.91	23.03%	$1,306,456.33	23.31%	$1,357,595.11	23.97%	$1,408,770.79	24.82%	$1,450,737.77	24.21%	$1,513,333.46	26.10%	$1,535,593.64	26.66%
Accounts Payable	$338,804.72	28.95%	$207,587.84	25.06%	$231,620.17	25.28%	$439,467.67	28.23%	$282,650.34	22.94%	$430,143.67	29.11%	$451,131.83	20.87%	$576,694.03	25.83%
December Total	**$1,344,398.22**	**33.22%**	**$1,446,578.00**	**30.61%**	**$1,503,918.41**	**31.16%**	**$1,573,314.08**	**32.34%**	**$1,587,829.31**	**32.31%**	**$1,690,389.95**	**32.89%**	**$1,750,121.38**	**33.01%**	**$1,777,214.42**	**34.56%**
Payroll and Benefits	$1,185,882.01	33.04%	$1,244,464.16	30.53%	$1,293,460.90	31.10%	$1,352,358.36	31.80%	$1,411,764.26	32.99%	$1,453,747.63	32.31%	$1,493,938.48	34.67%	$1,539,049.71	35.40%
Accounts Payable	$158,516.21	34.08%	$202,113.84	31.00%	$210,457.51	31.47%	$220,955.72	35.39%	$176,065.05	28.56%	$236,642.32	35.90%	$256,182.90	26.56%	$238,164.71	31.21%
January total	**$1,312,879.88**	**40.61%**	**$1,416,599.92**	**37.69%**	**$1,478,112.93**	**38.55%**	**$1,575,058.75**	**40.08%**	**$1,633,516.52**	**40.32%**	**$1,704,823.80**	**40.84%**	**$1,853,600.58**	**41.46%**	**$1,756,679.25**	**42.53%**
Payroll and Benefits	$1,177,040.50	41.05%	$1,257,022.65	38.10%	$1,298,596.35	38.92%	$1,388,499.67	39.84%	$1,438,173.00	41.32%	$1,477,790.55	40.54%	$1,535,612.56	43.48%	$1,577,529.06	44.35%
Accounts Payable	$135,839.38	38.48%	$159,577.27	35.70%	$179,516.58	36.75%	$186,559.08	41.43%	$195,343.52	34.78%	$227,033.25	42.41%	$317,988.02	33.62%	$179,150.19	35.26%
February Total	**$1,403,873.80**	**48.51%**	**$1,618,399.15**	**45.79%**	**$1,526,340.07**	**46.18%**	**$1,596,272.75**	**47.93%**	**$1,649,623.40**	**48.40%**	**$1,725,930.50**	**48.89%**	**$1,704,430.45**	**49.23%**	**$1,758,843.04**	**50.51%**
Payroll and Benefits	$1,191,361.71	49.17%	$1,256,823.51	45.67%	$1,291,244.15	46.70%	$1,349,013.62	47.66%	$1,391,119.52	49.38%	$1,435,662.72	48.53%	$1,500,331.65	52.08%	$1,533,400.12	53.06%
Accounts Payable	$212,512.09	45.37%	$361,575.64	46.33%	$235,095.92	43.67%	$247,259.13	49.44%	$258,503.88	43.02%	$290,267.78	50.74%	$204,098.80	38.16%	$225,442.92	40.35%
March total	**$1,349,916.60**	**56.11%**	**$1,463,652.98**	**53.10%**	**$1,604,907.73**	**54.21%**	**$1,628,284.06**	**55.93%**	**$1,643,416.11**	**56.46%**	**$1,701,819.92**	**56.83%**	**$1,753,060.01**	**57.22%**	**$1,996,937.55**	**59.57%**
Payroll and Benefits	$1,198,109.22	57.33%	$1,290,767.24	53.45%	$1,333,219.78	54.73%	$1,385,812.13	55.68%	$1,420,120.87	57.61%	$1,443,608.06	56.58%	$1,518,851.10	60.79%	$1,567,073.03	61.96%
Accounts Payable	$151,807.38	50.29%	$172,885.74	51.42%	$271,687.95	51.66%	$242,471.93	57.30%	$223,295.24	50.14%	$258,211.86	58.16%	$234,208.91	43.36%	$429,864.52	50.06%
April Total	**$1,330,513.12**	**63.60%**	**$1,488,270.17**	**60.55%**	**$1,393,336.22**	**61.18%**	**$1,605,283.97**	**63.82%**	**$1,595,748.63**	**64.28%**	**$1,644,321.37**	**64.50%**	**$1,719,549.38**	**65.05%**	**$1,782,401.82**	**67.66%**
Payroll and Benefits	$1,181,684.00	65.38%	$1,261,959.40	61.05%	$1,295,557.89	62.54%	$1,349,987.19	63.50%	$1,392,441.45	65.67%	$1,416,457.92	64.46%	$1,465,501.95	69.20%	$1,551,494.35	70.77%
Accounts Payable	$148,829.12	55.11%	$226,310.77	58.07%	$97,778.33	54.53%	$255,296.78	65.57%	$203,307.18	56.62%	$227,863.45	64.70%	$254,047.43	49.00%	$230,907.47	55.28%
May Total	**$1,454,410.75**	**71.79%**	**$1,433,181.09**	**67.71%**	**$1,590,118.89**	**69.13%**	**$1,772,744.18**	**72.53%**	**$1,920,226.07**	**73.69%**	**$1,907,569.73**	**73.40%**	**$1,780,342.83**	**73.17%**	**$1,947,895.58**	**76.50%**
Payroll and Benefits	$1,192,409.39	73.51%	$1,266,060.96	68.68%	$1,288,718.16	70.30%	$1,328,667.38	71.20%	$1,403,191.42	73.80%	$1,434,293.62	72.45%	$1,447,628.60	77.50%	$1,546,711.69	79.55%
Accounts Payable	$262,001.36	63.60%	$167,120.13	62.99%	$301,400.73	63.40%	$444,076.80	79.95%	$517,034.65	73.10%	$473,276.11	78.28%	$332,714.23	56.39%	$401,183.89	64.35%
June Total	**$1,478,554.44**	**80.11%**	**$1,786,307.10**	**76.64%**	**$1,905,598.30**	**78.65%**	**$1,913,859.70**	**81.93%**	**$1,934,814.67**	**83.18%**	**$2,007,087.28**	**82.76%**	**$1,956,589.81**	**82.09%**	**$2,113,652.77**	**86.09%**
Payroll and Benefits	$1,188,929.32	81.61%	$1,281,344.42	76.40%	$1,310,032.08	78.19%	$1,363,166.89	79.10%	$1,410,864.62	81.97%	$1,439,871.60	80.47%	$1,472,278.74	85.94%	$1,540,498.86	88.30%
Accounts Payable	$289,625.12	72.98%	$504,962.68	77.84%	$595,566.22	80.91%	$550,692.81	97.79%	$523,950.05	89.81%	$567,215.68	94.56%	$484,311.07	67.15%	$573,153.91	77.30%
July Total	**$1,318,578.29**	**87.53%**	**$1,917,135.16**	**86.23%**	**$1,522,654.33**	**86.27%**	**$1,670,132.49**	**90.14%**	**$1,664,126.84**	**91.34%**	**$1,810,156.40**	**91.21%**	**$1,724,746.83**	**89.95%**	**$0.00**	**86.09%**
Payroll and Benefits	$1,163,519.86	89.54%	$1,259,810.39	83.99%	$1,306,272.91	86.06%	$1,366,690.15	87.01%	$1,397,327.62	90.07%	$1,433,090.84	88.45%	$1,498,573.49	94.54%		88.30%
Accounts Payable	$155,058.43	78.00%	$657,324.77	97.17%	$216,381.42	87.28%	$303,442.34	107.62%	$266,799.22	98.31%	$377,065.56	105.38%	$226,173.34	72.18%		77.30%
August Total	**$1,916,892.73**	**98.32%**	**$2,304,800.20**	**97.75%**	**$2,255,212.34**	**97.54%**	**$1,643,692.26**	**98.22%**	**$1,763,664.53**	**99.98%**	**$1,869,245.30**	**99.92%**	**$2,197,232.90**	**99.97%**	**$0.00**	**86.09%**
Payroll and Benefits	$1,215,792.69	97.82%	$1,253,854.19	91.54%	$1,327,324.79	94.06%	$1,335,378.74	94.75%	$1,398,339.51	98.17%	$1,423,449.07	96.38%	$1,457,211.83	102.90%		88.30%
Accounts Payable	$701,100.04	100.71%	$1,050,946.01	128.09%	$927,887.55	114.57%	$308,313.52	117.61%	$365,325.02	109.96%	$445,796.23	118.18%	$740,021.07	88.61%		77.30%
Total Expended	**$17,466,641.20**	**98.32%**	**$19,550,459.06**	**97.75%**	**$19,508,677.30**	**97.54%**	**$19,987,800.27**	**98.22%**	**$20,396,977.88**	**99.98%**	**$21,422,311.50**	**99.92%**	**$21,930,925.02**	**99.97%**	**$18,970,981.51**	**86.09%**
Total Budgeted	**$17,764,736.00**		**$19,999,791.00**		**$19,999,791.00**		**$20,350,895.00**		**$20,400,895.00**		**$21,438,519.00**		**$21,938,519.00**		**$22,036,065.00**	
Payroll and Benefits	$14,677,899.00		$16,599,826.53		$16,599,826.53		$17,263,819.59		$17,263,819.59		$17,954,372.37		$17,436,457.79		$17,610,822.36	
Accounts Payable	$3,086,837.00		$3,399,964.47		$3,399,964.47		$3,087,075.41		$3,137,075.41		$3,484,146.63		$4,502,061.21		$4,425,242.64	
Over/Under	**(298,094.80)**	**1.68%**	**(449,331.94)**	**2.25%**	**(491,113.70)**	**2.46%**	**(363,094.73)**	**1.78%**	**(3,917.12)**	**0.02%**	**(16,207.50)**	**0.08%**	**(7,593.98)**	**0.03%**	**(3,065,083.49)**	**13.91%**

REVENUE REPORT	2013-14	%	2014-15	%	2015-16	%	2016-17	%	2017-18	%	2018-19	%	2019-20	%	2020-21	%
September Total	**$3,265,998.95**	**18.78%**	**$3,689,300.73**	**17.69%**	**$3,777,399.57**	**18.11%**	**$3,834,741.76**	**18.88%**	**$4,269,068.23**	**21.29%**	**$4,203,426.68**	**19.61%**	**$4,094,118.24**	**18.66%**	**$4,232,590.23**	**19.21%**
Local/County	$2,722,697.71	27.36%	$2,959,876.38	25.25%	$3,296,850.19	25.42%	$3,244,512.16	24.10%	$3,616,567.87	24.80%	$3,871,636.68	25.65%	$3,604,268.24	24.38%	$3,774,311.58	24.35%
State	$517,078.69	8.34%	$581,961.52	8.41%	$406,284.76	7.95%	$405,292.50	8.03%	$318,484.56	8.39%	$327,782.00	7.31%	$440,597.00	8.66%	$411,943.00	7.74%
Federal	$26,108.00	2.12%	$147,462.83	6.66%	$74,077.43	2.66%	$184,795.20	10.34%	$334,015.80	20.00%	$4,008.00	0.22%	$49,218.00	3.17%	$46,228.00	3.80%
Other	$114.55	1.15%	$0.00	0.00%	$187.19	1.87%	$141.90	1.42%		0.00%		0.00%	$35.00	0.01%	$107.65	10.77%
October Total	**$849,385.19**	**23.67%**	**$819,772.20**	**21.62%**	**$919,934.61**	**22.52%**	**$800,032.03**	**22.82%**	**$812,931.69**	**25.34%**	**$681,958.11**	**22.79%**	**$1,377,824.61**	**24.94%**	**$816,726.35**	**22.91%**
Local/County	$259,569.32	29.96%	$225,585.97	27.18%	$465,936.95	29.02%	$353,056.80	26.72%	$334,446.13	27.10%	$325,062.51	27.80%	$596,074.99	28.41%	$351,235.35	26.62%
State	$523,529.69	16.79%	$588,572.52	16.92%	$444,247.15	16.65%	$416,054.50	16.27%	$284,749.00	15.89%	$341,484.00	14.93%	$391,391.00	16.34%	$424,550.00	15.72%
Federal	$349.10	2.15%	$3,548.58	6.82%	$9,750.51	3.02%	$30,675.73	12.06%	$193,736.56	31.60%	$15,411.60	1.05%	$390,312.22	28.31%	$40,941.00	7.17%
Other	$65,937.08	660.52%	$2,065.13	20.65%	$0.00	1.87%	$245.00	3.87%		0.00%		0.00%	$46.40	0.02%		10.77%
November Total	**$670,719.61**	**27.53%**	**$704,918.79**	**25.00%**	**$841,237.42**	**26.56%**	**$934,567.57**	**27.42%**	**$404,661.44**	**27.36%**	**$647,571.18**	**25.81%**	**$771,613.90**	**28.46%**	**$1,169,477.55**	**28.22%**
Local/County	$112,741.80	31.10%	$98,109.77	28.01%	$115,861.20	29.91%	$158,699.52	27.90%	$111,941.11	27.87%	$179,813.65	28.99%	$197,185.63	29.74%	$258,451.54	28.28%
State	$515,078.69	25.09%	$581,961.52	25.33%	$0.00	16.65%	$405,292.50	24.30%	$274,019.00	23.11%	$327,782.00	22.24%	$468,434.00	25.55%	$414,614.00	23.52%
Federal	$35,415.49	5.03%	$24,291.13	7.92%	$723,064.57	29.03%	$370,575.55	32.80%	$7,103.33	32.03%	$139,975.53	8.62%	$105,878.47	35.13%	$496,412.01	48.03%
Other	$7,483.63	735.35%	$556.37	26.22%	$2,311.65	24.99%	$0.00	3.87%	$11,598.00	115.98%		0.00%	$115.80	0.04%		10.77%
December Total	**$800,090.95**	**32.13%**	**$894,606.37**	**29.29%**	**$1,243,678.07**	**32.52%**	**$863,838.51**	**31.68%**	**$683,867.94**	**30.77%**	**$745,256.34**	**29.28%**	**$896,769.14**	**32.55%**	**$827,976.41**	**31.98%**
Local/County	$192,538.93	33.03%	$226,629.75	29.95%	$307,081.16	32.28%	$266,290.80	29.88%	$264,179.54	29.68%	$295,771.34	30.95%	$92,217.14	30.37%	$289,567.41	30.15%
State	$607,161.69	34.89%	$655,231.52	34.80%	$914,854.52	34.57%	$405,292.50	32.33%	$395,674.00	33.54%	$449,485.00	32.27%	$492,476.00	35.22%	$537,909.00	33.63%
Federal	$0.00	5.03%	$7,379.81	8.25%	$14,668.35	29.55%	$192,255.21	43.56%	$24,014.40	33.47%	$0.00	8.62%	$312,026.00	55.23%	$500.00	48.07%
Other	$390.33	739.26%	$5,365.29	79.87%	$7,074.04	95.73%	$0.00	3.87%	$0.00	115.98%	$0.00	0.00%	$50.00	0.05%		10.77%
January total	**$2,125,248.63**	**44.35%**	**$1,840,957.36**	**38.12%**	**$2,258,459.02**	**43.35%**	**$1,894,173.38**	**41.00%**	**$2,829,527.97**	**44.88%**	**$2,143,935.43**	**39.29%**	**$1,990,036.12**	**41.62%**	**$2,190,774.94**	**41.92%**
Local/County	$1,194,008.87	45.03%	$1,173,520.62	39.96%	$1,324,921.74	42.50%	$1,361,047.88	39.98%	$1,549,462.72	40.31%	$1,456,969.16	40.60%	$1,494,719.34	40.48%	$1,567,644.21	40.27%
State	$606,631.69	44.67%	$655,231.52	44.27%	$931,190.66	52.80%	$522,738.50	42.68%	$521,133.00	47.27%	$587,974.82	45.39%	$492,476.00	44.89%	$537,393.00	43.73%
Federal	$324,573.84	31.44%	$11,844.10	8.79%	$2,346.62	29.64%	$3,497.12	43.75%	$758,932.25	78.91%	$98,991.45	13.97%	$2,840.78	55.41%	$85,737.73	55.13%
Other	$34.23	739.60%	$361.12	83.48%		95.73%	$6,889.88	72.77%		115.98%	$0.00	0.00%	$0.00	0.05%	$0.00	10.77%
February Total	**$1,148,504.60**	**50.96%**	**$1,728,208.84**	**46.41%**	**$852,443.43**	**47.44%**	**$1,182,532.68**	**46.82%**	**$968,000.97**	**49.70%**	**$1,506,024.77**	**46.31%**	**$1,099,000.32**	**46.63%**	**$2,243,195.36**	**52.10%**
Local/County	$247,669.25	47.52%	$255,338.86	42.14%	$262,178.17	44.52%	$285,384.80	42.10%	$346,579.55	42.68%	$484,057.23	43.81%	$309,750.97	42.57%	$760,830.20	45.18%
State	$891,484.60	59.05%	$1,030,379.73	59.16%	$523,430.65	63.05%	$735,559.01	57.25%	$621,370.07	63.64%	$680,247.54	60.56%	$769,209.02	60.01%	$897,669.16	60.60%
Federal	$8,725.67	32.15%	$442,490.25	28.78%	$66,834.61	32.04%	$161,430.75	52.79%		78.91%	$341,720.00	32.45%	$20,040.33	56.70%	$584,696.00	103.25%
Other	$625.08	745.85%	$0.00	83.48%		95.73%	$158.12	74.35%	$51.35	116.49%		0.00%		0.05%		10.77%
March total	**$1,088,408.12**	**57.22%**	**$1,211,095.78**	**52.21%**	**$1,513,121.85**	**54.70%**	**$876,612.25**	**51.14%**	**$1,614,261.92**	**57.75%**	**$1,197,908.35**	**51.90%**	**$1,576,841.46**	**53.81%**	**$1,571,509.69**	**59.23%**
Local/County	$322,560.66	50.76%	$425,766.41	45.77%	$485,798.34	48.27%	$343,463.17	44.65%	$874,833.73	48.68%	$735,622.34	48.68%	$1,050,597.26	49.68%	$970,560.69	51.44%
State	$628,728.00	69.19%	$664,297.52	68.76%	$500,780.51	72.85%	$523,290.50	67.62%	$505,145.00	76.95%	$451,351.00	70.63%	$505,545.00	69.94%	$536,088.00	70.67%
Federal	$136,430.87	43.25%	$120,632.85	34.23%	$515,712.32	50.59%	$9,786.44	53.33%	$232,369.39	92.82%	$10,874.49	33.03%	$20,699.20	58.04%	$56,529.99	107.90%
Other	$688.59	752.73%	$399.00	87.47%	$10,830.68	204.04%	$72.14	75.07%	$1,913.80	135.63%	$60.52	0.61%		0.05%	$8,331.01	843.87%
April Total	**$1,633,241.15**	**66.61%**	**$1,863,742.31**	**61.15%**	**$2,030,684.75**	**64.43%**	**$2,508,145.70**	**63.49%**	**$1,882,637.98**	**67.14%**	**$1,790,266.77**	**60.25%**	**$2,828,317.75**	**66.71%**	**$2,043,657.09**	**68.51%**
Local/County	$1,008,894.58	60.89%	$998,263.70	54.29%	$1,277,509.82	58.12%	$1,354,835.34	54.72%	$1,226,461.20	57.09%	$1,335,750.77	57.53%	$1,389,422.05	59.08%	$1,503,081.09	61.13%
State	$608,417.69	79.01%	$684,985.53	78.66%	$509,797.76	82.83%	$530,337.50	78.12%	$130,411.00	80.39%	$452,516.00	80.72%	$566,734.00	81.07%	$540,576.00	80.83%
Federal	$13,969.09	44.39%	$180,493.08	42.38%	$243,077.17	59.34%	$619,472.86	88.00%	$525,765.78	124.31%	$2,000.00	33.14%	$872,161.70	114.21%	$0.00	107.90%
Other	$1,959.79	772.33%	$0.00	87.47%	$300.00	207.04%	$3,500.00	110.07%		135.63%		0.61%		0.05%		843.87%
May Total	**$3,932,891.88**	**89.23%**	**$4,708,506.23**	**83.73%**	**$4,701,494.65**	**86.98%**	**$5,182,724.79**	**89.01%**	**$5,392,764.13**	**94.03%**	**$4,923,775.77**	**83.22%**	**$4,918,720.22**	**89.13%**	**$5,854,040.48**	**95.07%**
Local/County	$3,268,977.47	93.74%	$3,823,961.03	86.91%	$3,802,993.88	87.45%	$4,437,550.99	87.67%	$4,713,266.24	89.42%	$4,459,175.77	87.07%	$4,407,221.22	88.89%	$4,608,631.48	90.87%
State	$609,889.66	88.85%	$663,745.52	88.25%	$556,121.29	93.72%	$516,629.50	88.35%	$674,811.00	98.17%	$449,702.00	90.76%	$506,613.00	91.02%	$557,564.00	91.31%
Federal	$48,453.34	48.33%	$220,669.22	52.35%	$342,379.48	71.65%	$223,752.87	100.52%	$4,686.89	124.59%	$14,898.00	33.95%	$4,886.00	114.53%	$687,845.00	164.52%
Other	$5,571.41	828.05%	$130.46	88.77%		207.04%	$4,791.43	157.98%		135.63%		0.61%		0.05%		843.87%
June Total	**$1,133,300.30**	**95.75%**	**$1,148,776.66**	**89.24%**	**$1,493,688.04**	**94.14%**	**$1,400,905.70**	**95.91%**	**$594,899.27**	**97.00%**	**$1,384,220.99**	**89.67%**	**$1,331,886.96**	**95.20%**	**$1,090,902.12**	**100.02%**
Local/County	$316,040.03	96.91%	$300,080.50	89.47%	$863,965.74	94.11%	$577,183.40	91.96%	$253,977.33	91.16%	$659,670.31	91.44%	$676,798.45	93.47%	$406,931.81	93.49%
State	$666,530.56	99.60%	$700,820.48	98.38%	$526,569.77	104.03%	$795,801.97	104.12%	$339,195.00	107.11%	$508,033.00	102.09%	$551,800.00	101.86%	$645,960.00	103.46%
Federal	$149,047.80	60.45%	$146,450.68	58.97%	$102,986.09	75.36%	$27,920.33	102.08%	$1,600.00	124.68%	$216,517.68	45.66%	$103,133.26	121.17%	$38,010.31	167.65%
Other	$1,681.91	844.87%	$1,425.00	103.02%	$166.44	208.70%	$0.00	157.98%	$126.94	136.90%		0.61%	$155.25	0.08%		843.87%
July Total	**$211,749.74**	**96.97%**	**$389,401.73**	**91.10%**	**$229,587.05**	**95.24%**	**$179,037.44**	**96.79%**	**$73,390.13**	**97.36%**	**$732,262.67**	**93.09%**	**$368,265.57**	**96.88%**	**$0.00**	**100.02%**
Local/County	$77,114.79	97.69%	$332,808.51	92.31%	$103,610.47	94.91%	$135,494.63	92.97%	$17,969.13	91.29%	$216,886.67	92.87%	$216,245.57	94.93%		93.49%
State	$6,837.50	99.71%	$35,084.52	98.89%	$0.00	104.03%	$0.00	104.12%	$0.00	107.11%	$102,387.00	104.37%	$152,020.00	104.85%		103.46%
Federal	$127,411.04	70.82%	$21,073.17	59.92%	$119,497.83	79.66%	$15,039.00	102.93%	$55,421.00	128.00%	$412,989.00	67.99%	$0.00	121.17%		167.65%
Other	$386.41	848.73%	$435.53	107.38%	$6,478.75	273.49%	$28,503.81	443.02%		136.90%		0.61%		0.08%		843.87%
August Total	**$439,373.88**	**99.50%**	**$617,773.93**	**94.07%**	**$1,249,431.71**	**101.23%**	**$314,415.70**	**98.34%**	**$1,434,937.34**	**104.52%**	**$912,684.24**	**97.34%**	**$877,724.29**	**100.88%**	**$0.00**	**100.02%**
Local/County	$358,946.75	101.29%	$377,791.04	95.53%	$830,622.55	101.31%	$130,881.70	93.94%	$880,456.63	97.33%	$762,004.02	97.92%	$831,731.44	100.55%		93.49%
State	$41,490.58	100.38%	$0.00	98.89%	$56,784.53	105.14%		104.12%	$123,161.60	110.35%	$0.00	104.37%	$0.00	104.85%		103.46%
Federal	$38,925.14	73.99%	$216,848.53	69.72%	$283,118.59	89.84%	$183,534.00	113.20%	$431,319.11	153.83%	$146,946.22	75.93%	$44,252.85	124.02%		167.65%
Other	$11.41	848.84%	$23,134.36	338.72%	$78,906.04	1062.55%		443.02%		136.90%	$3,734.00	37.95%	$1,740.00	0.42%		843.87%
Total Received	**$17,298,913.00**	**99.50%**	**$19,617,060.93**	**94.07%**	**$21,111,160.17**	**101.23%**	**$19,971,727.51**	**98.34%**	**$20,960,949.01**	**104.52%**	**$20,869,291.30**	**97.34%**	**$22,131,118.58**	**100.88%**	**$22,040,850.22**	**100.02%**
Total Budgeted	**$17,386,713.00**		**$20,854,313.00**		**$20,854,313.00**		**$20,309,772.00**		**$20,055,234.00**		**$21,438,519.00**		**$21,938,519.00**		**$22,036,065.00**	
Local/County Budgeted	$9,953,110.00		$11,721,501.00		$12,967,000.00		$13,464,451.00		$14,580,040.00		$15,096,341.00		$14,784,334.00		$15,499,631.00	
State Budgeted	$6,199,437.00		$6,919,305.00		$5,107,423.00		$5,048,400.00		$3,795,194.00		$4,482,678.00		$5,090,531.00		$5,320,434.00	
Federal Budgeted	$1,229,166.00		$2,213,506.00		$2,779,889.00		$1,786,921.00		$1,670,000.00		$1,849,500.00		$1,552,500.00		$1,215,000.00	
Others Budgeted	$10,000.00		$10,000.00		$10,000.00		$10,000.00		$10,000.00		$10,000.00		$511,154.00		$1,000.00	
Over/Under	**(87,800.00)**	**-0.50%**	**(1,237,252.07)**	**-5.93%**	**256,847.17**	**1.23%**	**(338,044.49)**	**-1.66%**	**905,715.01**	**4.52%**	**(569,227.70)**	**-2.66%**	**192,599.58**	**0.88%**	**4,785.22**	**0.02%**

2020-21 School Year

01	General Fund	Budgeted/Beginning	September	October	November	December	January	February	March	April	May	June	July	August	Year to Date	Balance	% Spent/Rec
	SPED Expenditures	1,132,005.00	179,097.85	233,195.71	249,158.75	244,137.14	238,464.92	225,631.79	227,793.23	243,070.87	$254,897.60	233,573.13			2,329,020.99	(1,197,015.99)	205.74%
	Non-SPED Expenditures	20,904,030.00	1,733,755.57	1,579,020.28	1,863,128.92	1,533,077.28	1,518,214.33	1,533,211.25	1,769,144.32	1,539,330.95	1,692,997.98	1,880,079.64	0.00	0.00	16,641,960.52	4,262,069.48	79.61%
	Total Expenditures	22,036,035.00	1,912,853.42	1,812,215.99	2,112,287.67	1,777,214.42	1,756,679.25	1,758,843.04	1,996,937.55	1,782,401.82	1,947,895.58	2,113,652.77	0.00	0.00	18,970,981.51	3,065,053.49	86.09%
	Total Receipts	22,036,065.00	4,232,590.23	816,726.35	1,169,477.55	827,976.41	2,190,774.94	2,243,195.36	1,571,509.69	2,043,657.09	5,854,040.48	1,090,902.12	0.00	0.00	22,040,850.22	(4,785.22)	100.02%
	Monthly Inter-Fund Loan	0.00	0.00	0.00	0.00	0.00	0.00	0.00	0.00	0.00	0.00	0.00	0.00	0.00			
	Cash Balance	**2,286,133.14**	**4,605,869.95**	**3,610,380.31**	**2,667,570.19**	**1,718,332.18**	**2,152,427.87**	**2,636,780.19**	**2,211,352.33**	**2,472,607.60**	**6,378,752.50**	**5,356,001.85**	**5,356,001.85**	**5,356,001.85**			

02	Depreciation Fund	Budgeted/Beginning	September	October	November	December	January	February	March	April	May	June	July	August	Year to Date	Balance	% Spent/Rec
	Expenditures	850,000.00	35,343.61	26,646.34	17,582.74	201,893.31	2,699.85	847.50	5,700.00	11,889.73	27,246.00	14,703.80			344,552.88	505,447.12	40.54%
	Receipts	448,547.09	58.59	51.28	91.09	28.43	2.71	44.40	250,033.74	42.79	71.84	40.16			250,465.03	198,082.06	55.84%
	Loan to General Fund	0.00	0.00	0.00	0.00	0.00	0.00	0.00	0.00	0.00	0.00	0.00	0.00	0.00	Outstanding		
	Loan Repayment from GF	0.00	0.00	0.00	0.00	0.00	0.00	0.00	0.00	0.00	0.00	0.00	0.00	0.00	0.00		
	Cash Balance	**401,452.91**	**366,167.89**	**339,572.83**	**322,081.18**	**120,216.30**	**117,519.16**	**116,716.06**	**361,049.80**	**349,202.86**	**322,028.70**	**307,365.06**	**307,365.06**	**307,365.06**			

03	Employee Benefit	Budgeted/Beginning	September	October	November	December	January	February	March	April	May	June	July	August	Year to Date	Balance	% Spent/Rec
	Expenditures	145,560.00	5,626.57	10,963.46	10,633.74	2,639.98	6,419.73	6,635.94	4,957.82	4,546.19	2,293.91	9,712.14			64,429.48	81,130.52	44.26%
	Receipts	145,560.00	32,538.02	5,874.02	5,910.09	5,874.02	5,874.05	5,734.26	5,724.05	5,723.93	5,734.05	5,723.93			84,710.42	60,849.58	58.20%
	Cash Balance	**69,246.68**	**96,158.13**	**91,068.69**	**86,345.04**	**89,579.08**	**89,033.40**	**88,131.72**	**88,897.95**	**90,075.69**	**93,515.83**	**89,527.62**	**89,527.62**	**89,527.62**			

09	QCPUF	Budgeted/Beginning	September	October	November	December	January	February	March	April	May	June	July	August	Year to Date	Balance	% Spent/Rec
	Expenditures	4,840,000.00	0.00	0.00	0.00	512,916.77	103,884.71	13,614.64	0.00	51,260.00	0.00	119,210.00			800,886.12	4,039,113.88	16.55%
	Receipts	500,000.00	133,737.81	10,976.54	118,816.75	8,565.68	52,310.38	24,004.09	31,949.73	50,253.63	158,816.65	124,747.33			714,178.59	(214,178.59)	142.84%
	Cash Balance	**4,282,038.80**	**4,415,776.61**	**4,426,753.15**	**4,545,569.90**	**4,041,218.81**	**3,989,644.48**	**4,000,033.93**	**4,031,983.66**	**4,030,977.29**	**4,189,793.94**	**4,195,331.27**	**4,195,331.27**	**4,195,331.27**			

05	Activities	Budgeted/Beginning	September	October	November	December	January	February	March	April	May	June	July	August	Year to Date	Balance	% Spent/Rec
	Expenditures	600,000.00	26,888.76	37,237.27	21,602.26	20,622.71	21,826.70	16,373.66	56,601.72	40,117.19	38,789.26	29,161.59			309,221.12	290,778.88	51.54%
	Receipts	600,000.00	25,594.34	20,071.91	134,798.79	43,246.76	24,586.35	26,915.09	48,129.14	45,618.53	44,261.94	19,778.63			433,001.48	166,998.52	72.17%
	Cash Balance	**338,022.23**	**336,727.81**	**319,562.45**	**432,758.98**	**455,383.03**	**458,142.68**	**468,684.11**	**460,211.53**	**465,712.87**	**471,185.55**	**461,802.59**	**461,802.59**	**461,802.59**			

06	School Lunch	Budgeted/Beginning	September	October	November	December	January	February	March	April	May	June	July	August	Year to Date	Balance	% Spent/Rec
	Expenditures	1,225,000.00	97,363.26	118,153.44	103,182.51	126,748.57	97,141.77	126,245.42	160,663.50	127,461.82	131,809.30	112,801.32			1,201,570.91	23,429.09	98.09%
	Receipts	1,225,000.00	65,670.98	158,965.84	104,766.70	157,252.53	11,340.05	103,879.40	262,642.46	147,163.27	143,145.33	101,645.19			1,256,471.75	(31,471.75)	102.57%
	Cash Balance	**341,098.92**	**309,406.64**	**350,219.04**	**351,803.23**	**382,307.19**	**296,505.47**	**274,139.45**	**376,118.41**	**395,819.86**	**407,155.89**	**395,999.76**	**395,999.76**	**395,999.76**			

07	Bond	Budgeted/Beginning	September	October	November	December	January	February	March	April	May	June	July	August	Year to Date	Balance	% Spent/Rec
	Expenditures	1,675,000.00	160,085.94	0.00	0.00	503,933.70	0.00	0.00	0.00	0.00	0.00	186,601.50			850,621.14	824,378.86	50.78%
	Receipts	1,107,814.00	265,963.04	20,460.33	11,371.03	17,833.02	114,562.25	52,071.37	69,770.86	110,513.61	351,123.54	26,585.52			1,040,254.57	67,559.43	93.90%
	Cash Balance	**444,108.37**	**549,985.47**	**570,445.80**	**581,816.83**	**95,716.15**	**210,278.40**	**262,349.77**	**332,120.63**	**442,634.24**	**793,757.78**	**633,741.80**	**633,741.80**	**633,741.80**			

08	Special Building	Budgeted/Beginning	September	October	November	December	January	February	March	April	May	June	July	August	Year to Date	Balance	% Spent/Rec
	Expenditures	3,500,000.00	693,929.21	667,118.78	594,895.17	9,446.97	72,698.35	44,321.01	52,790.25	0.00	10,689.46	15,765.17			2,161,654.37	1,338,345.63	61.76%
	Receipts	150,000.00	374.96	199.64	47.58	63.70	158,954.10	215.11	4.78	14.58	1.72	0.32			159,876.49	(9,876.49)	106.58%
	Loan Balance to Gen. Fund	0.00	0.00	0.00	0.00	0.00	0.00	0.00	0.00	0.00	0.00	0.00	0.00	0.00	Outstanding		
	Loan Repayment from GF	0.00	0.00	0.00	0.00	0.00	0.00	0.00	0.00	0.00	0.00	0.00	0.00	0.00	0.00		
	Cash Balance	**2,058,408.16**	**1,364,853.91**	**697,934.77**	**103,087.18**	**93,703.91**	**179,959.66**	**135,853.76**	**83,068.29**	**83,082.87**	**72,395.13**	**56,630.28**	**56,630.28**	**56,630.28**			

12	Student Fees	Budgeted/Beginning	September	October	November	December	January	February	March	April	May	June	July	August	Year to Date	Balance	% Spent/Rec
	Expenditures	90,000.00	0.00	0.00	51,787.70	448.00	158.00	437.00	1,013.00	427.00	50.00	576.00			54,896.70	35,103.30	61.00%
	Receipts	30,000.00	3,520.00	1,606.00	1,078.75	1,280.00	1,185.00	599.00	620.00	0.00	2,664.01	0.00			12,552.76	17,447.24	41.84%
	Cash Balance	**94,122.64**	**97,642.64**	**99,248.64**	**48,539.69**	**49,371.69**	**50,398.69**	**50,560.69**	**50,167.69**	**49,740.69**	**52,354.70**	**51,778.70**	**51,778.70**	**51,778.70**			

10	Cooperative Fund	Budgeted/Beginning	September	October	November	December	January	February	March	April	May	June	July	August	Year to Date	Balance	% Spent/Rec
	Expenditures	150,000.00	4,641.20	4,641.20	4,641.20	4,641.20	4,641.20	4,593.43	4,641.20	4,641.19	4,641.20	4,641.19			46,364.21	103,635.79	30.91%
	Receipts	100,000.00	0.00	4,587.43	4,656.00	4,656.00	4,656.00	4,656.00	4,656.00	4,655.99	9,311.99	0.00			41,835.41	58,164.59	41.84%
	Cash Balance	**6,630.27**	**1,989.07**	**1,935.30**	**1,950.10**	**1,964.90**	**1,979.70**	**2,042.27**	**2,057.07**	**2,071.87**	**6,742.66**	**2,101.47**	**2,101.47**	**2,101.47**			

	Cash Balance	Budgeted/Beginning	September	October	November	December	January	February	March	April	May	June	July	August	Year to Date	Balance	% Spent/Rec
	Cash Balance	**10,321,262.12**	**12,144,578.12**	**10,507,120.98**	**9,141,522.32**	**7,047,793.24**	**7,545,889.51**	**8,035,291.95**	**7,997,027.36**	**8,381,925.84**	**12,787,682.68**	**11,550,280.40**	**11,550,280.40**	**11,550,280.40**			

2019-20 School Year

01	General Fund	Budgeted/Beginning	September	October	November	December	January	February	March	April	May	June	July	August	Year to Date	Balance	% Spent/Rec
	SPED Expenditures	1,009,565.00	150,305.53	215,577.67	247,286.45	254,808.16	236,458.60	225,897.28	238,814.30	234,449.46	229,625.12	238,419.22	183,682.50	166,792.97	2,622,117.26	(1,612,552.26)	259.73%
	Non-SPED Expenditures	20,928,954.00	1,617,928.90	1,536,147.66	1,724,004.64	1,494,875.78	1,617,141.98	1,478,970.61	1,514,245.71	1,485,099.92	1,550,717.71	1,718,170.59	1,541,064.33	2,030,439.93	19,308,807.76	1,620,146.24	92.26%
	Total Expenditures	21,938,519.00	1,768,234.43	1,751,725.33	1,971,291.09	1,749,683.94	1,853,600.58	1,704,867.89	1,753,060.01	1,719,549.38	1,780,342.83	1,956,589.81	1,724,746.83	2,197,232.90	21,930,925.02	7,593.98	99.97%
	Total Receipts	21,938,519.00	4,094,118.24	1,377,824.61	771,613.90	896,769.14	1,990,036.12	1,099,000.32	1,576,841.46	2,828,317.75	4,918,720.22	1,331,886.96	368,265.57	877,724.29	22,131,118.58	(192,599.58)	100.88%
	Monthly Inter-Fund Loan	0.00	0.00	0.00	0.00	0.00	0.00	0.00	0.00	0.00	0.00	0.00	0.00	0.00			
	Cash Balance	**2,085,939.58**	**4,411,823.39**	**4,037,922.67**	**2,838,245.48**	**1,985,330.68**	**2,121,766.22**	**1,515,898.65**	**1,339,680.10**	**2,448,448.47**	**5,586,825.86**	**4,962,123.01**	**3,605,641.75**	**2,286,133.14**			
02	**Depreciation Fund**	Budgeted/Beginning	September	October	November	December	January	February	March	April	May	June	July	August	Year to Date	Balance	% Spent/Rec
	Expenditures	850,000.00	5,400.00	0.00	0.00	5,400.00	0.00	0.00	5,400.00	0.00	13,029.84	11,030.36	20,875.21	59,081.25	120,216.66	729,783.34	14.14%
	Receipts	200,000.00	126.24	112.86	252.16	106.33	101.20	244.41	61.47	49.52	156.04	46.13	40.03	200,140.16	201,436.55	(1,436.55)	100.72%
	Loan to General Fund	0.00	0.00	0.00	0.00	0.00	0.00	0.00	0.00	0.00	0.00	0.00	0.00	0.00	Outstanding		
	Loan Repayment from GF	0.00	0.00	0.00	0.00	0.00	0.00	0.00	0.00	0.00	0.00	0.00	0.00	0.00	0.00		
	Cash Balance	**320,233.02**	**314,959.26**	**315,072.12**	**315,324.28**	**310,030.61**	**310,131.81**	**310,376.22**	**305,037.69**	**305,087.21**	**292,213.41**	**281,229.18**	**260,394.00**	**401,452.91**			
03	**Employee Benefit**	Budgeted/Beginning	September	October	November	December	January	February	March	April	May	June	July	August	Year to Date	Balance	% Spent/Rec
	Expenditures	145,560.00	4,083.69	10,654.27	7,872.26	4,782.14	5,507.41	9,162.66	7,168.63	6,135.38	13,164.12	3,760.09	3,243.91	9,746.71	85,281.27	60,278.73	58.59%
	Receipts	80,000.00	29,953.83	6,621.83	6,655.82	6,621.83	6,621.88	6,657.57	6,621.88	6,621.79	6,656.98	6,621.79	6,621.88	6,341.10	102,618.18	(22,618.18)	128.27%
	Cash Balance	**51,909.77**	**77,779.91**	**73,747.47**	**72,531.03**	**74,370.72**	**75,485.19**	**72,980.10**	**72,433.35**	**72,919.76**	**66,412.62**	**69,274.32**	**72,652.29**	**69,246.68**			
09	**QCPUF**	Budgeted/Beginning	September	October	November	December	January	February	March	April	May	June	July	August	Year to Date	Balance	% Spent/Rec
	Expenditures	4,340,000.00	0.00	0.00	0.00	119,710.00	0.00	0.00	0.00	0.00	0.00	119,210.00	0.00	0.00	238,920.00	4,101,080.00	5.51%
	Receipts	750,000.00	130,576.31	22,031.92	119,887.82	4,549.50	53,237.41	10,762.90	38,258.53	48,732.09	156,945.34	136,680.00	6,396.79	28,910.93	756,969.54	(6,969.54)	100.93%
	Cash Balance	**3,763,989.26**	**3,894,565.57**	**3,916,597.49**	**4,036,485.31**	**3,921,324.81**	**3,974,562.22**	**3,985,325.12**	**4,023,583.65**	**4,072,315.74**	**4,229,261.08**	**4,246,731.08**	**4,253,127.87**	**4,282,038.80**			
05	**Activities**	Budgeted/Beginning	September	October	November	December	January	February	March	April	May	June	July	August	Year to Date	Balance	% Spent/Rec
	Expenditures	600,000.00	48,476.35	31,005.16	27,056.66	70,545.95	25,960.11	60,873.55	12,030.14	19,076.61	33,467.55	5,463.77	37,009.10	41,684.30	412,649.25	187,350.75	68.77%
	Receipts	500,000.00	63,425.78	37,799.74	25,079.74	45,675.49	49,122.42	25,284.38	24,215.50	4,247.10	11,507.11	14,058.01	17,417.15	42,925.82	360,758.24	139,241.76	72.15%
	Cash Balance	**389,913.24**	**404,862.67**	**411,657.25**	**409,680.33**	**384,809.87**	**407,972.18**	**372,383.01**	**384,568.37**	**369,738.86**	**347,778.42**	**356,372.66**	**336,780.71**	**338,022.23**			
06	**School Lunch**	Budgeted/Beginning	September	October	November	December	January	February	March	April	May	June	July	August	Year to Date	Balance	% Spent/Rec
	Expenditures	1,275,000.00	154,946.05	119,990.71	105,844.03	106,027.06	90,356.16	114,380.51	113,093.32	100,971.50	77,957.17	81,675.12	105,487.98	94,708.89	1,265,438.50	9,561.50	99.25%
	Receipts	1,100,000.00	87,802.74	127,498.51	137,378.43	129,707.18	106,307.08	121,049.92	128,927.77	84,109.32	124,187.29	100,219.73	112,254.57	129,817.39	1,389,259.93	(289,259.93)	126.30%
	Cash Balance	**217,277.49**	**150,134.18**	**157,641.98**	**189,176.38**	**212,856.50**	**228,807.42**	**235,476.83**	**251,311.28**	**234,449.10**	**280,679.22**	**299,223.83**	**305,990.42**	**341,098.92**			
07	**Bond**	Budgeted/Beginning	September	October	November	December	January	February	March	April	May	June	July	August	Year to Date	Balance	% Spent/Rec
	Expenditures	1,675,000.00	0.00	0.00	0.00	725,356.36	0.00	0.00	0.00	0.00	0.00	330,230.00	0.00	0.00	1,055,586.36	619,413.64	63.02%
	Receipts	500,000.00	127,233.92	19,147.83	5,166.20	2,080.73	98,515.40	15,320.63	72,448.09	94,522.02	311,100.22	44,974.37	9,947.79	54,555.10	855,012.30	(355,012.30)	171.00%
	Cash Balance	**644,682.43**	**771,916.35**	**791,064.18**	**796,230.38**	**72,954.75**	**171,470.15**	**186,790.78**	**259,238.87**	**353,760.89**	**664,861.11**	**379,605.48**	**389,553.27**	**444,108.37**			
08	**Special Building**	Budgeted/Beginning	September	October	November	December	January	February	March	April	May	June	July	August	Year to Date	Balance	% Spent/Rec
	Expenditures	13,500,000.00	194,392.75	376,843.16	773,546.62	1,485,416.99	1,002,218.48	903,441.32	1,478,346.59	957,760.92	1,305,616.67	881,767.83	1,086,865.27	1,268,056.92	11,714,273.52	1,785,726.48	86.77%
	Receipts	150,000.00	139,291.18	29,201.87	13,547.22	9,776.01	9,767.10	31,643.52	4,230.04	2,657.66	2,036.72	1,549.73	1,296.21	1,640.14	246,637.40	(96,637.40)	164.42%
	Loan Balance to Gen. Fund	0.00	0.00	0.00	0.00	0.00	0.00	0.00	0.00	0.00	0.00	0.00	0.00	0.00	Outstanding		
	Loan Repayment from GF	0.00	0.00	0.00	0.00	0.00	0.00	0.00	0.00	0.00	0.00	0.00	0.00	0.00	0.00		
	Cash Balance	**13,526,044.28**	**13,470,942.71**	**13,123,301.42**	**12,363,302.02**	**10,887,661.04**	**9,895,209.66**	**9,023,411.86**	**7,549,295.31**	**6,594,192.05**	**5,290,612.10**	**4,410,394.00**	**3,324,824.94**	**2,058,408.16**			
12	**Student Fees**	Budgeted/Beginning	September	October	November	December	January	February	March	April	May	June	July	August	Year to Date	Balance	% Spent/Rec
	Expenditures	70,000.00	0.00	1,184.62	1,188.00	284.81	149.00	1,402.75	862.87	556.00	149.00	0.00	0.00	0.00	5,777.05	64,222.95	8.25%
	Receipts	36,000.00	6,629.75	1,331.90	2,803.00	688.00	290.00	762.00	2,807.00	0.00	40.00	1,627.79	0.00	7,760.00	24,739.44	11,260.56	68.72%
	Cash Balance	**75,160.25**	**81,790.00**	**81,937.28**	**83,552.28**	**83,955.47**	**84,096.47**	**83,455.72**	**85,399.85**	**84,843.85**	**84,734.85**	**86,362.64**	**86,362.64**	**94,122.64**			
10	**Cooperative Fund**	Budgeted/Beginning	September	October	November	December	January	February	March	April	May	June	July	August	Year to Date	Balance	% Spent/Rec
	Expenditures	150,000.00	4,559.14	4,925.63	4,738.51	4,595.79	5,010.63	4,683.85	4,592.94	4,592.79	4,635.47	4,267.42	4,692.69	5,006.03	56,300.89	93,699.11	37.53%
	Receipts	100,000.00	3,796.99	0.00	4,039.60	4,039.60	4,039.60	4,039.60	4,039.61	4,039.60	4,039.61	4,039.60	4,039.61	4,701.87	44,855.29	55,144.71	44.86%
	Cash Balance	**18,075.87**	**17,313.72**	**12,388.09**	**11,689.18**	**11,132.99**	**10,161.96**	**9,517.71**	**8,964.38**	**8,411.19**	**7,815.33**	**7,587.51**	**6,934.43**	**6,630.27**			
	Cash Balance	Budgeted/Beginning	September	October	November	December	January	February	March	April	May	June	July	August	Year to Date	Balance	% Spent/Rec
	Cash Balance	**21,093,225.19**	**23,596,087.76**	**22,921,329.95**	**21,116,216.67**	**17,944,427.44**	**17,279,663.28**	**15,795,616.00**	**14,279,512.85**	**14,544,167.12**	**16,851,194.00**	**15,098,903.71**	**12,642,262.32**	**10,321,262.12**			

Agenda Item

Consider, discuss and take all necessary action to award and approve a construction contract for replacement of the high school and middle school windows.

Resolution

BE IT RESOLVED by Colfax County School District 19-0123, also known as Schuyler Community Schools, a Class III School District under the laws and statutes of the State of Nebraska, at this meeting of its Board of Education ("School District"), that the School District should and hereby does approve an award to Midwest Glass Service, Inc., as the recommended lowest responsible bidder for the removal, replacement and installation of a new windows at the high school and middle school facilities;

BE IT FURTHER RESOLVED that the construction contract with the above contractor, in the form on file with official school district records and as present at this meeting or with such changes as are deemed necessary and in the best interest of the school district and approved by the Board President or Superintendent of Schools, should be and is hereby authorized and approved;

BE IT FURTHER RESOLVED that the Board President, Superintendent of Schools, or a designee for either, should be and is hereby authorized, approved, delegate authority to and is directed to sign, execute, and deliver the construction contract with the above contractor, and any documents or agreements called for in such construction contract, for and on behalf of the School District, to sign and approve any contract amendments, modifications, change orders, and construction change directives, and to retain any necessary professionals for assistance, to pay the construction contract fees, costs and expenses and all transaction costs, change order increases, and expenses related to the construction project and to the site work to be performed and completed, and to take or cause to be taken all other action necessary or appropriate to complete any requirements or obligations under the construction contract.

MOTION by _____ that the Board of Education should and does hereby approve an award to and authorize a contract with Midwest Glass Service, Inc. for removal, replacement and installation of a new windows at the high school and middle school facilities and the Board approves and adopts the attached RESOLUTION.

Board member _____ seconded the MOTION. After discussion and on roll call vote, the following Board members voted in favor of passage and adoption of the above Motion and attached Resolution: _____ _____.

The following Board members voted against the same: _____.

The following Board members were absent or not voting: _____.

The above Motion and attached Resolution having been consented to by a majority of the members of the Board of Education of this School District, was declared as passed and adopted by the President at a duly held and lawfully convened meeting in full compliance with the Nebraska Open Meetings Law.

DATED this 12th day of July, 2021.

COLFAX COUNTY SCHOOL DISTRICT 19-0123, A/K/A SCHUYLER COMMUNITY SCHOOLS

BY: _____
Board President

ATTEST:

_____
Board Secretary

AIA® Document A104™ – 2017

Standard Abbreviated Form of Agreement Between Owner and Contractor

AGREEMENT made as of the 12th day of July in the year 2021
(In words, indicate day, month and year.)

BETWEEN the Owner:
(Name, legal status, address and other information)

Colfax County School District 19-0123 a/k/a Schuyler Community Schools,
A political subdivision of the State of Nebraska
120 W 20th Street
Schuyler, NE 68661

and the Contractor:
(Name, legal status, address and other information)

Midwest Glass Service, Inc.
A Nebraska corporation
2512 12th Street
Columbus, NE 68601

for the following Project:
(Name, location and detailed description)

Schuyler Community Schools – Window replacement project at Schuyler Central High School, located at 401 Adam Street, and at Schuyler Middle School, located at 200 West 10th Street, both in Schuyler, Nebraska; the project generally consisting of the removal and disposal of existing exterior windows and installation new exterior windows as identified by the Owner in the following quantities: twenty-three (23) windows at the high school facility and thirty (30) windows at the middle school facility, as more particularly described in the Specifications.

The Architect:
(Name, legal status, address and other information)

None. All references to "Architect" shall mean a reference to the "Owner."

The Owner and Contractor agree as follows.

ADDITIONS AND DELETIONS:
The author of this document has added information needed for its completion. The author may also have revised the text of the original AIA standard form. An *Additions and Deletions Report* that notes added information as well as revisions to the standard form text is available from the author and should be reviewed. A vertical line in the left margin of this document indicates where the author has added necessary information and where the author has added to or deleted from the original AIA text.

This document has important legal consequences. Consultation with an attorney is encouraged with respect to its completion or modification.

AIA Document A104™ – 2017 (formerly A107™ – 2007). Copyright © 1936, 1951, 1958, 1961, 1963, 1966, 1970, 1974, 1978, 1987, 1997, 2007 and 2017 by The American Institute of Architects. All rights reserved. The "American Institute of Architects," "AIA," the AIA Logo, and "AIA Contract Documents" are registered trademarks and may not be used without permission. This document was produced by AIA software at 12:42:22 ET on 07/09/2021 under Order No.5191009158 which expires on 01/30/2022, is not for resale, is licensed for one-time use only, and may only be used in accordance with the AIA Contract Documents® Terms of Service. To report copyright violations, e-mail copyright@aia.org.
User Notes: (1517236076)

TABLE OF ARTICLES

1 THE WORK OF THIS CONTRACT

2 DATE OF COMMENCEMENT AND SUBSTANTIAL COMPLETION

3 CONTRACT SUM

4 PAYMENT

5 DISPUTE RESOLUTION

6 ENUMERATION OF CONTRACT DOCUMENTS

7 GENERAL PROVISIONS

8 OWNER

9 CONTRACTOR

10 ARCHITECT

11 SUBCONTRACTORS

12 CONSTRUCTION BY OWNER OR BY SEPARATE CONTRACTORS

13 CHANGES IN THE WORK

14 TIME

15 PAYMENTS AND COMPLETION

16 PROTECTION OF PERSONS AND PROPERTY

17 INSURANCE AND BONDS

18 CORRECTION OF WORK

19 MISCELLANEOUS PROVISIONS

20 TERMINATION OF THE CONTRACT

21 CLAIMS AND DISPUTES

ARTICLE 1 THE WORK OF THIS CONTRACT

The Contractor shall execute the Work described in the Contract Documents, except as specifically indicated in the Contract Documents to be the responsibility of others.

ARTICLE 2 DATE OF COMMENCEMENT AND SUBSTANTIAL COMPLETION

§ 2.1 The date of commencement of the Work shall be:
(Check one of the following boxes.)

[ ] The date of this Agreement.

[X] A date set forth in a notice to proceed issued by the Owner. The notice to proceed shall not be issued by the Owner until the Agreement has been signed by the Contractor, approved by the Owner's Board of

AIA Document A104™ – 2017 (formerly A107™ – 2007). Copyright © 1936, 1951, 1958, 1961, 1963, 1966, 1970, 1974, 1978, 1987, 1997, 2007 and 2017 by The American Institute of Architects. All rights reserved. The "American Institute of Architects," "AIA," the AIA Logo, and "AIA Contract Documents" are registered trademarks and may not be used without permission. This document was produced by AIA software at 12:42:22 ET on 07/09/2021 under Order No.5191009158 which expires on 01/30/2022, is not for resale, is licensed for one-time use only, and may only be used in accordance with the AIA Contract Documents® Terms of Service. To report copyright violations, e-mail copyright@aia.org.
User Notes: (1517236076)

Education, signed by the Owner's authorized representative, and Owner has received all required payment and performance bonds and certificates of insurance as required under Article 17.

[ ] Established as follows:
(Insert a date or a means to determine the date of commencement of the Work.)

If a date of commencement of the Work is not selected, then the date of commencement shall be the date of this Agreement.

§ 2.2 The Contract Time shall be measured from the date of commencement.

§ 2.3 Substantial Completion

§ 2.3.1 Subject to adjustments of the Contract Time as provided in the Contract Documents, the Contractor shall achieve Substantial Completion of the entire Work:
(Check the appropriate box and complete the necessary information.)

[ ] Not later than ( ) calendar days from the date of commencement of the Work.

[ ] By the following date: August 1, 2022

§ 2.3.2 Subject to adjustments of the Contract Time as provided in the Contract Documents, if portions of the Work are to be completed prior to Substantial Completion of the entire Work, the Contractor shall achieve Substantial Completion of such portions by the following dates:

Portion of Work	Substantial Completion Date

§ 2.3.3 If the Contractor fails to achieve Substantial Completion as provided in this Section 2.3, liquidated damages, if any, shall be assessed as set forth in Section 3.5.

ARTICLE 3 CONTRACT SUM

§ 3.1 The Owner shall pay the Contractor the Contract Sum in current funds for the Contractor's performance of the Contract. The Contract Sum shall be one of the following:
(Check the appropriate box.)

[X] Stipulated Sum, in accordance with Section 3.2 below

[ ] Cost of the Work plus the Contractor's Fee, in accordance with Section 3.3 below

[ ] Cost of the Work plus the Contractor's Fee with a Guaranteed Maximum Price, in accordance with Section 3.4 below

(Based on the selection above, complete Section 3.2, 3.3 or 3.4 below.)

§ 3.2 The Stipulated Sum shall be One Hundred Twenty-Six Thousand, Five Hundred and No/100ths Dollars ($ 126,500.00), subject to additions and deductions as provided in the Contract Documents.

§ 3.2.1 The Stipulated Sum is based upon the following alternates, if any, which are described in the Contract Documents and are hereby accepted by the Owner:
(State the numbers or other identification of accepted alternates. If the bidding or proposal documents permit the Owner to accept other alternates subsequent to the execution of this Agreement, attach a schedule of such other alternates showing the amount for each and the date when that amount expires.)

None

AIA Document A104™ – 2017 (formerly A107™ – 2007). Copyright © 1936, 1951, 1958, 1961, 1963, 1966, 1970, 1974, 1978, 1987, 1997, 2007 and 2017 by The American Institute of Architects. All rights reserved. The "American Institute of Architects," "AIA," the AIA Logo, and "AIA Contract Documents" are registered trademarks and may not be used without permission. This document was produced by AIA software at 12:42:22 ET on 07/09/2021 under Order No.5191009158 which expires on 01/30/2022, is not for resale, is licensed for one-time use only, and may only be used in accordance with the AIA Contract Documents® Terms of Service. To report copyright violations, e-mail copyright@aia.org.
User Notes: (1517236076)

§ 3.2.2 Unit prices, if any: None
(Identify the item and state the unit price and the quantity limitations, if any, to which the unit price will be applicable.)

Item	Units and Limitations	Price per Unit ($0.00)

§ 3.2.3 Allowances, if any, included in the stipulated sum: None
(Identify each allowance.)

Item	Price

§ 3.2.4 Contractor acknowledges that the Stipulated Sum includes all requirements of the federal Davis Bacon Act.

(Paragraphs deleted)
§ 3.3 [omit]

§ 3.4
(Paragraphs deleted)
[omit]

§ 3.5 Liquidated damages, if any:
(Insert terms and conditions for liquidated damages, if any.)

ARTICLE 4 PAYMENT

§ 4.1 Progress Payments

§ 4.1.1 Based upon Applications for Payment submitted to the Architect by the Contractor and Certificates for Payment issued by the Architect, the Owner shall make progress payments on account of the Contract Sum to the Contractor as provided below and elsewhere in the Contract Documents.

§ 4.1.2 The period covered by each Application for Payment shall be one calendar month ending on the last day of the month.

§ 4.1.3 Provided that an Application for Payment is received by the Architect not later than the 25th day of a month, the Owner shall make payment of the certified amount to the Contractor not later than the last day of the following month. If an Application for Payment is received by the Architect after the date fixed above, payment shall be made by the Owner not later than thirty (30) days after the review and action on the Application for Payment by the Owner's Board of Education at a regular meeting held pursuant to Neb. Rev. Stat. § 79-554. Notwithstanding the requirements of this section, to allow sufficient time for review and action on Applications for Payment by the Owner's Board of Education at a regular meeting held pursuant to Neb. Rev. Stat. § 79-554, the "receipt by the owner or the owner's representative of a payment request made pursuant to the contract" under Neb. Rev. Stat. § 45-1203 shall be deemed to occur at the regular meeting of the Owner's Board of Education immediately following the receipt of the Application for Payment by the Architect.
(Federal, state or local laws may require payment within a certain period of time.)

§ 4.1.4 The amount of each progress payment made prior to Substantial Completion of the Work for amounts not in dispute shall be computed as follows:

§ 4.1.4.1 Progress payments shall be made on the basis of that portion of the Contract Sum properly allocable to completed Work as determined by multiplying the percentage completion of each portion of the Work by the share of the Contract Sum allocated to that portion of the Work in the schedule of values, less retainage as set forth in § 4.1.4.2.

§ 4.1.4.2 The retainage amount deducted from each progress payment shall be that portion of the Contract Sum properly allocable to Completed Work in the amount of ten percent (10%) of the Completed Work for the first fifty

AIA Document A104™ – 2017 (formerly A107™ – 2007). Copyright © 1936, 1951, 1958, 1961, 1963, 1966, 1970, 1974, 1978, 1987, 1997, 2007 and 2017 by The American Institute of Architects. All rights reserved. The "American Institute of Architects," "AIA," the AIA Logo, and "AIA Contract Documents" are registered trademarks and may not be used without permission. This document was produced by AIA software at 12:42:22 ET on 07/09/2021 under Order No.5191009158 which expires on 01/30/2022, is not for resale, is licensed for one-time use only, and may only be used in accordance with the AIA Contract Documents® Terms of Service. To report copyright violations, e-mail copyright@aia.org.
User Notes: (1517236076)

percent (50%) of the Contract Sum, and in the amount of not less than five percent (5%) of the Completed Work for the last fifty percent (50%) of the Contract Sum

§ 4.1.5 Payments due and unpaid under the Contract shall bear interest from the date payment is due at the rate stated below, or in the absence thereof, at the legal rate prevailing from time to time at the place where the Project is located. *(Insert rate of interest agreed upon, if any.)*

Pursuant to Neb. Rev. Stat. §45-1205, interest due under this section shall accrue until such amount is paid, beginning on the day following the payment due date at the rate of one percent per month or a pro rata fraction thereof on the unpaid balance. Interest is due under this section only after the person charged the interest has been notified of the provisions of this section by the Contractor.

§ 4.2 Final Payment

§ 4.2.1 Final payment, constituting the entire unpaid balance of the Contract Sum, shall be made by the Owner to the Contractor when

.1 the Contractor has fully performed the Contract except for the Contractor's responsibility to correct Work as provided in Section 18.2, and to satisfy other requirements, if any, which extend beyond final payment;

.2 the Contractor has submitted the following documents (a) AIA Document G707 consent of surety, if any, to final payment, (b) notarized subcontractor's liens release using AIA Document G706A; (c) receipts, releases and waivers of liens, claims, security interests or encumbrances arising out of the Contract, to the extent and in such form as may be designated by the Owner; (d) Department of Labor Division of Employment Form No. 16, Certificate of Contribution Status, from the State of Nebraska Department of Labor certifying that the Contractor and each of its Subcontractors have paid all contributions and interest due to and including the calendar quarter immediately preceding the date of Substantial Completion; (e) Contractor's warranties; (f) Maintenance and Instruction Manuals ; and (g) Record drawings and "as-built" drawings;; and

.3 a final Certificate for Payment has been issued by the Architect in accordance with Section 15.7.1.

§ 4.2.2 The Owner's final payment to the Contractor shall be made no later than 30 days after the issuance of the Architect's final Certificate for Payment.

§ 4.3 PAYMENT CONTINGENT UPON AVAILABILITY OF APPROPRIATED FUNDS OR FUNDS APPROVED BY OWNER'S BOARD OF EDUCATION

Any other provisions of the Contract Documents to the contrary notwithstanding, it is expressly understood and agreed that the legal obligation of the Owner to pay the Contract Sum or any part thereof shall be contingent upon the availability of funds specifically approved by formal action of the Owner's Board of Education for the purpose of payment of the Contract Sum or any part thereof.

ARTICLE 5 DISPUTE RESOLUTION

§ 5.1 Binding Dispute Resolution

For any claim subject to, but not resolved by, mediation pursuant to Section 21.5, the method of binding dispute resolution shall be as follows:
(Check the appropriate box.)

[ ] Arbitration pursuant to Section 21.6 of this Agreement

[**X**] Litigation in a court of competent jurisdiction

[ ] Other *(Specify)*

If the Owner and Contractor do not select a method of binding dispute resolution, or do not subsequently agree in writing to a binding dispute resolution method other than litigation, claims will be resolved in a court of competent jurisdiction.

AIA Document A104™ – 2017 (formerly A107™ – 2007). Copyright © 1936, 1951, 1958, 1961, 1963, 1966, 1970, 1974, 1978, 1987, 1997, 2007 and 2017 by The American Institute of Architects. All rights reserved. The "American Institute of Architects," "AIA," the AIA Logo, and "AIA Contract Documents" are registered trademarks and may not be used without permission. This document was produced by AIA software at 12:42:22 ET on 07/09/2021 under Order No.5191009158 which expires on 01/30/2022, is not for resale, is licensed for one-time use only, and may only be used in accordance with the AIA Contract Documents® Terms of Service. To report copyright violations, e-mail copyright@aia.org.
User Notes: (1517236076)

ARTICLE 6 ENUMERATION OF CONTRACT DOCUMENTS

§ 6.1 The Contract Documents are defined in Article 7 and, except for Modifications issued after execution of this Agreement, are enumerated in the sections below.

§ 6.1.1 The Agreement is this executed AIA Document A104™–2017, Standard Abbreviated Form of Agreement Between Owner and Contractor.

§ 6.1.2
(Paragraphs deleted)
[omit]

§ 6.1.3 The Supplementary and other Conditions of the Contract: See attached Appendix F

Document	Title	Date	Pages

§ 6.1.4 The Specifications: See attached Appendix E
(Either list the Specifications here or refer to an exhibit attached to this Agreement.)

Section	Title	Date	Pages

§ 6.1.5 The Drawings: Not applicable
(Either list the Drawings here or refer to an exhibit attached to this Agreement.)

Number	Title	Date

§ 6.1.6 The Addenda, if any: None

Number	Date	Pages

Portions of Addenda relating to bidding or proposal requirements are not part of the Contract Documents unless the bidding or proposal requirements are enumerated in this Article 6.

§ 6.1.7 Additional documents, if any, forming part of the Contract Documents:

.1 Other Exhibits:
(Check all boxes that apply.)

(Table deleted)
(Paragraphs deleted)

*(Paragraphs deleted)***.2** Other documents, if any, listed below:
(List here any additional documents that are intended to form part of the Contract Documents.)

Contractor's Payment and Performance Bond, Appendix A
Contractor's Certificate of Insurance, Appendix B
Job Site Security Protocol, Appendix C
Contractor Affidavit, Appendix D

AIA Document A104™ – 2017 (formerly A107™ – 2007). Copyright © 1936, 1951, 1958, 1961, 1963, 1966, 1970, 1974, 1978, 1987, 1997, 2007 and 2017 by The American Institute of Architects. All rights reserved. The "American Institute of Architects," "AIA," the AIA Logo, and "AIA Contract Documents" are registered trademarks and may not be used without permission. This document was produced by AIA software at 12:42:22 ET on 07/09/2021 under Order No.5191009158 which expires on 01/30/2022, is not for resale, is licensed for one-time use only, and may only be used in accordance with the AIA Contract Documents® Terms of Service. To report copyright violations, e-mail copyright@aia.org.
User Notes: (1517236076)

ARTICLE 7 GENERAL PROVISIONS

§ 7.1 The Contract Documents

The Contract Documents are enumerated in Article 6 and consist of this Agreement (including, if applicable, Supplementary and other Conditions of the Contract), Drawings, Specifications, Addenda issued prior to the execution of this Agreement, other documents listed in this Agreement, and Modifications issued after execution of this Agreement. A Modification is (1) a written amendment to the Contract signed by both parties, (2) a Change Order, (3) a Construction Change Directive, or (4) a written order for a minor change in the Work issued by the Architect. The intent of the Contract Documents is to include all items necessary for the proper execution and completion of the Work by the Contractor. The Contract Documents are complementary, and what is required by one shall be as binding as if required by all; performance by the Contractor shall be required to the extent consistent with the Contract Documents and reasonably inferable from them as being necessary to produce the indicated results.

§ 7.2 The Contract

The Contract Documents form the Contract for Construction. The Contract represents the entire and integrated agreement between the parties hereto and supersedes prior negotiations, representations, or agreements, either written or oral. The Contract may be amended or modified only by a Modification. The Contract Documents shall not be construed to create a contractual relationship of any kind between any persons or entities other than the Owner and the Contractor.

§ 7.3 The Work

The term "Work" means the construction and services required by the Contract Documents, whether completed or partially completed, and includes all other labor, materials, equipment, and services provided or to be provided by the Contractor to fulfill the Contractor's obligations. The Work may constitute the whole or a part of the Project.

§ 7.4 Instruments of Service

Instruments of Service are representations, in any medium of expression now known or later developed, of the tangible and intangible creative work performed by the Architect and the Architect's consultants under their respective professional services agreements. Instruments of Service may include, without limitation, studies, surveys, models, sketches, drawings, specifications, and other similar materials.

§ 7.5 Ownership and use of Drawings, Specifications and Other Instruments of Service

§ 7.5.1 The Owner and/or the Architect and the Architect's consultants shall be deemed the authors and owners of their respective Instruments of Service, including the Drawings and Specifications, and will retain all common law, statutory and other reserved rights in their Instruments of Service, including copyrights. The Contractor, Subcontractors, Sub-subcontractors, and suppliers shall not own or claim a copyright in the Instruments of Service. Submittal or distribution to meet official regulatory requirements or for other purposes in connection with the Project is not to be construed as publication in derogation of the Architect's or Architect's consultants' reserved rights.

§ 7.5.2 The Contractor, Subcontractors, Sub-subcontractors and suppliers are authorized to use and reproduce the Instruments of Service provided to them, subject to the protocols established pursuant to Sections 7.6 and 7.7, solely and exclusively for execution of the Work. All copies made under this authorization shall bear the copyright notice, if any, shown on the Instruments of Service. The Contractor, Subcontractors, Sub-subcontractors, and suppliers may not use the Instruments of Service on other projects or for additions to this Project outside the scope of the Work without the specific written consent of the Owner, Architect and the Architect's consultants.

§ 7.6 Digital Data Use and Transmission

The parties shall agree upon protocols governing the transmission and use of Instruments of Service or any other information or documentation in digital form.

§ 7.7 Building Information Models Use and Reliance

Any use of, or reliance on, all or a portion of a building information model without agreement to protocols governing the use of, and reliance on, the information contained in the model shall be at the using or relying party's sole risk and without liability to the other party and its contractors or consultants, the authors of, or contributors to, the building information model, and each of their agents and employees.

AIA Document A104™ – 2017 (formerly A107™ – 2007). Copyright © 1936, 1951, 1958, 1961, 1963, 1966, 1970, 1974, 1978, 1987, 1997, 2007 and 2017 by The American Institute of Architects. All rights reserved. The "American Institute of Architects," "AIA," the AIA Logo, and "AIA Contract Documents" are registered trademarks and may not be used without permission. This document was produced by AIA software at 12:42:22 ET on 07/09/2021 under Order No.5191009158 which expires on 01/30/2022, is not for resale, is licensed for one-time use only, and may only be used in accordance with the AIA Contract Documents® Terms of Service. To report copyright violations, e-mail copyright@aia.org.
User Notes: (1517236076)

§ 7.8 Severability
The invalidity of any provision of the Contract Documents shall not invalidate the Contract or its remaining provisions. If it is determined that any provision of the Contract Documents violates any law, or is otherwise invalid or unenforceable, then that provision shall be revised to the extent necessary to make that provision legal and enforceable. In such case the Contract Documents shall be construed, to the fullest extent permitted by law, to give effect to the parties' intentions and purposes in executing the Contract.

§ 7.9 Notice
§ 7.9.1 Except as otherwise provided in Section 7.9.2, where the Contract Documents require one party to notify or give notice to the other party, such notice shall be provided in writing to the designated representative of the party to whom the notice is addressed and shall be deemed to have been duly served if delivered in person, by mail, by courier, or by electronic transmission, or as otherwise set forth below:
(If other than in accordance with AIA Document E203–2013, insert requirements for delivering Notice in electronic format such as name, title and email address of the recipient and whether and how the system will be required to generate a read receipt for the transmission.)

§ 7.9.2 Notice of Claims shall be provided in writing and shall be deemed to have been duly served only if delivered to the designated representative of the party to whom the notice is addressed by certified or registered mail, or by courier providing proof of delivery.

§ 7.10 Relationship of the Parties
The Contractor accepts the relationship of trust and confidence established by this Agreement and covenants with the Owner to cooperate with the Architect and exercise the Contractor's skill and judgment in furthering the interests of the Owner; to furnish efficient business administration and supervision; to furnish at all times an adequate supply of workers and materials; and to perform the Work in an expeditious and economical manner consistent with the Owner's interests. The Owner agrees to furnish and approve, in a timely manner, information required by the Contractor and to make payments to the Contractor in accordance with the requirements of the Contract Documents.

ARTICLE 8 OWNER
§ 8.1 Information and Services Required of the Owner
§ 8.1.1 Prior to commencement of the Work, at the written request by the Contractor, the Owner shall furnish to the Contractor reasonable evidence that the Owner has made financial arrangements to fulfill the Owner's obligations under the Contract. The Contractor shall have no obligation to commence the Work until the Owner provides such evidence. If commencement of the Work is delayed under this Section 8.1.1, the Contract Time shall be extended appropriately.

§ 8.1.2 The Owner shall furnish all necessary surveys and a legal description of the site.

§ 8.1.3 The Contractor shall be entitled to rely on the accuracy of information furnished by the Owner but shall exercise proper precautions and due diligence relating to the safe performance of the Work.

§ 8.1.4 Except for permits and fees that are the responsibility of the Contractor under the Contract Documents, including those required under Section 9.6.1, the Owner shall secure and pay for other necessary approvals, easements, assessments, and charges required for the construction, use, or occupancy of permanent structures or for permanent changes in existing facilities.

§ 8.2 Owner's Right to Stop the Work
If the Contractor fails to correct Work which is not in accordance with the requirements of the Contract Documents, or repeatedly fails to carry out the Work in accordance with the Contract Documents, the Owner may issue a written order to the Contractor to stop the Work, or any portion thereof, until the cause for such order is eliminated; however, the right of the Owner to stop the Work shall not give rise to a duty on the part of the Owner to exercise this right for the benefit of the Contractor or any other person or entity.

AIA Document A104™ – 2017 (formerly A107™ – 2007). Copyright © 1936, 1951, 1958, 1961, 1963, 1966, 1970, 1974, 1978, 1987, 1997, 2007 and 2017 by The American Institute of Architects. All rights reserved. The "American Institute of Architects," "AIA," the AIA Logo, and "AIA Contract Documents" are registered trademarks and may not be used without permission. This document was produced by AIA software at 12:42:22 ET on 07/09/2021 under Order No.5191009158 which expires on 01/30/2022, is not for resale, is licensed for one-time use only, and may only be used in accordance with the AIA Contract Documents® Terms of Service. To report copyright violations, e-mail copyright@aia.org.
User Notes: (1517236076)

§ 8.3 Owner's Right to Carry Out the Work

If the Contractor defaults or neglects to carry out the Work in accordance with the Contract Documents, and fails within a ten-day period after receipt of notice from the Owner to commence and continue correction of such default or neglect with diligence and promptness, the Owner may, without prejudice to any other remedies the Owner may have, correct such default or neglect. Such action by the Owner and amounts charged to the Contractor are both subject to prior approval of the Architect and the Architect may, pursuant to Section 15.4.3, withhold or nullify a Certificate for Payment in whole or in part, to the extent reasonably necessary to reimburse the Owner for the reasonable cost of correcting such deficiencies, including the Owner's expenses and compensation for the Architect's additional services made necessary by such default, neglect, or failure. If the Contractor disagrees with the actions of the Owner or the Architect, or the amounts claimed as costs to the Owner, the Contractor may file a Claim pursuant to Article 21.

ARTICLE 9 CONTRACTOR

§ 9.1 Review of Contract Documents and Field Conditions by Contractor

§ 9.1.1 Execution of the Contract by the Contractor is a representation that the Contractor has visited the site, become generally familiar with local conditions under which the Work is to be performed and correlated personal observations with requirements of the Contract Documents. The Contractor represents and warrants by submission of a bid the Contractor has carefully examined the Contract Documents, any soil test reports, drainage studies, geotechnical or other reports and the site of the Work, and that, from Contractor's own investigations, Contractor has satisfied itself as to the nature and location of the Work, the character, quality and quantity of surface and subsurface materials likely to be encountered, the character of equipment and other facilities needed for the performance of the Work, the general and local conditions and all other materials which may in any way affect the Work or its performance. The Contractor shall not be entitled to any additional time or compensation for Contractor's failure to visit the site, or for any additional Work caused by the Contractor's fault, by improper construction, or by Contractor's failure to visit the site or to carefully study and compare the Contract Documents prior to execution of the Work. The Contractor further represents that the Contractor is familiar with all applicable codes, ordinances, laws, regulations and rules as they apply to the Work, and that the Contractor will abide by same.

§ 9.1.2 Because the Contract Documents are complementary, the Contractor shall, before starting each portion of the Work, carefully study and compare the various Contract Documents relative to that portion of the Work, as well as the information furnished by the Owner pursuant to Section 8.1.2, shall take field measurements of any existing conditions related to that portion of the Work and shall observe any conditions at the site affecting it. These obligations are for the purpose of facilitating coordination and construction by the Contractor and are not for the purpose of discovering errors, omissions, or inconsistencies in the Contract Documents; however, the Contractor shall promptly report to the Architect any errors, inconsistencies, or omissions discovered by or made known to the Contractor as a request for information in such form as the Architect may require. It is recognized that the Contractor's review is made in the Contractor's capacity as a contractor and not as a licensed design professional unless otherwise specifically provided in the Contract Documents.

§ 9.1.3 Neither the Owner nor the Contractor is required to ascertain that the Contract Documents are in accordance with applicable laws, statutes, ordinances, codes, rules and regulations, or lawful orders of public authorities, but the Contractor shall promptly report to the Architect any nonconformity discovered by or made known to the Contractor as a request for information in such form as the Architect may require.

§ 9.2 Supervision and Construction Procedures

§ 9.2.1 The Contractor shall supervise and direct the Work, using the Contractor's best skill and attention. The Contractor shall be solely responsible for and have control over construction means, methods, techniques, sequences, and procedures, and for coordinating all portions of the Work under the Contract, unless the Contract Documents give other specific instructions concerning these matters.

§ 9.2.2 The Contractor shall be responsible to the Owner for acts and omissions of the Contractor's employees, Subcontractors and their agents and employees, and other persons or entities performing portions of the Work for or on behalf of the Contractor or any of its Subcontractors.

§ 9.3 Labor and Materials

§ 9.3.1 Unless otherwise provided in the Contract Documents, the Contractor shall provide and pay for labor, materials, equipment, tools, construction equipment and machinery, transportation, and other facilities and services

AIA Document A104™ – 2017 (formerly A107™ – 2007). Copyright © 1936, 1951, 1958, 1961, 1963, 1966, 1970, 1974, 1978, 1987, 1997, 2007 and 2017 by The American Institute of Architects. All rights reserved. The "American Institute of Architects," "AIA," the AIA Logo, and "AIA Contract Documents" are registered trademarks and may not be used without permission. This document was produced by AIA software at 12:42:22 ET on 07/09/2021 under Order No.5191009158 which expires on 01/30/2022, is not for resale, is licensed for one-time use only, and may only be used in accordance with the AIA Contract Documents® Terms of Service. To report copyright violations, e-mail copyright@aia.org.
User Notes: (1517236076)

necessary for proper execution and completion of the Work whether temporary or permanent and whether or not incorporated or to be incorporated in the Work.

§ 9.3.2 The Contractor shall enforce strict discipline and good order among the Contractor's employees and other persons carrying out the Work. The Contractor shall not permit employment of unfit persons or persons not skilled in tasks assigned to them. The Contractor releases, indemnifies and holds harmless the Owner for Contractor's forces' non-compliance with owner's drug-free, alcohol-free, weapon-free, harassment-free, and tobacco-free zones, contractor's forces' non-compliance with criminal law, or Contractor's or Contractor's forces' non-compliance with immigration law or regulations.

§ 9.3.3 The Contractor may make a substitution only with the consent of the Owner, after evaluation by the Architect and in accordance with a Modification.

§ 9.4 Warranty

The Contractor warrants to the Owner and Architect that materials and equipment furnished under the Contract will be of good quality and new unless the Contract Documents require or permit otherwise. The Contractor further warrants that the Work will conform to the requirements of the Contract Documents and will be free from defects, except for those inherent in the quality of the Work the Contract Documents require or permit. Work, materials, or equipment not conforming to these requirements may be considered defective. The Contractor's warranty excludes remedy for damage or defect caused by abuse, alterations to the Work not executed by the Contractor, improper or insufficient maintenance, improper operation or normal wear and tear under normal usage. All other warranties required by the Contract Documents shall be issued in the name of the Owner, or shall be transferable to the Owner, and shall commence in accordance with Section 15.6.3.

§ 9.5 Taxes

Owner is an exempt entity under the tax laws of the State of Nebraska. The Owner represents that this Project is eligible for exemption from the State Sales Tax on tangible personal property and material incorporated in the Project, provided that the Contractor fulfills the requirements of Neb. Rev. Stat. § 77-2704.15. For the purpose of establishing exemption, it is understood and agreed that the Contractor may be required to segregate materials and labor costs at the time a Contract is awarded. Contractor will accept Purchase Agent Appointment and Exempt Sales Certificate forms from the Owner. Contractor shall obtain Resale Certificates from Contractor's suppliers. Failure of Contractor or any Sub-Contractor to obtain Resale Certificates from their suppliers shall make the Contractor or Sub-Contractor responsible for absorbing the tax, without compensation from Owner. Contractor shall pay all necessary local, county and state taxes, income tax, compensation tax, social security and withholding payments as required by law. CONTRACTOR HEREBY RELEASES, INDEMNIFIES, AND HOLDS HARMLESS OWNER FROM ANY AND ALL CLAIMS AND DEMANDS MADE AS A RESULT OF THE FAILURE OF CONTRACTOR OR ANY SUBCONTRACTOR TO COMPLY WITH THE PROVISIONS OF ANY OR ALL SUCH LAWS AND REGULATIONS, provided that Owner provides Contractor with a timely submission of required tax exemption documents.

§ 9.6 Permits, Fees, Notices, and Compliance with Laws

§ 9.6.1 The Contractor shall be responsible for making and submitting application for the building permit. The Owner shall pay the municipality directly for the building permit and all other development "impact" fees, if any. The Contractor shall continue to be responsible for payment of other permits, governmental fees, licenses, and inspections necessary for proper execution of the Contract and which are legally required when bids or proposals are received. Such fees and expenses shall only be reimbursable to Contractor if expressly agreed to herein.

§ 9.6.2 The Contractor shall comply with and give notices required by applicable laws, statutes, ordinances, codes, rules and regulations, and lawful orders of public authorities applicable to performance of the Work. If the Contractor performs Work knowing it to be contrary to applicable laws, statutes, ordinances, codes, rules and regulations, or lawful orders of public authorities, the Contractor shall assume appropriate responsibility for such Work and shall bear the costs attributable to correction.

§ 9.7 Allowances

The Contractor shall include in the Contract Sum all allowances stated in the Contract Documents. The Owner shall select materials and equipment under allowances with reasonable promptness. Allowance amounts shall include the costs to the Contractor of materials and equipment delivered at the site and all required taxes, less applicable trade

AIA Document A104™ – 2017 (formerly A107™ – 2007). Copyright © 1936, 1951, 1958, 1961, 1963, 1966, 1970, 1974, 1978, 1987, 1997, 2007 and 2017 by The American Institute of Architects. All rights reserved. The "American Institute of Architects," "AIA," the AIA Logo, and "AIA Contract Documents" are registered trademarks and may not be used without permission. This document was produced by AIA software at 12:42:22 ET on 07/09/2021 under Order No.5191009158 which expires on 01/30/2022, is not for resale, is licensed for one-time use only, and may only be used in accordance with the AIA Contract Documents® Terms of Service. To report copyright violations, e-mail copyright@aia.org.
User Notes: (1517236076)

discounts. Contractor's costs for unloading and handling at the site, labor, installation, overhead, profit, and other expenses contemplated for stated allowance amounts shall be included in the Contract Sum but not in the allowance.

§ 9.8 Contractor's Construction Schedules

§ 9.8.1 The Contractor, within ten (10) days after being awarded the Contract, shall submit for the Owner's and Architect's information a Contractor's construction schedule for the Work. The schedule shall not exceed time limits current under the Contract Documents, shall be revised at appropriate intervals as required by the conditions of the Work and Project, shall be related to the entire Project to the extent required by the Contract Documents, and shall provide for expeditious and practicable execution of the Work.

§ 9.8.2 The Contractor shall perform the Work in general accordance with the most recent schedule submitted to the Owner and Architect.

§ 9.9 Submittals

§ 9.9.1 The Contractor shall review for compliance with the Contract Documents and submit to the Architect Shop Drawings, Product Data, Samples, and similar submittals required by the Contract Documents in coordination with the Contractor's construction schedule and in such sequence as to allow the Architect reasonable time for review. By submitting Shop Drawings, Product Data, Samples, and similar submittals, the Contractor represents to the Owner and Architect that the Contractor has (1) reviewed and approved them; (2) determined and verified materials, field measurements, and field construction criteria related thereto, or will do so; and (3) checked and coordinated the information contained within such submittals with the requirements of the Work and of the Contract Documents. The Work shall be in accordance with approved submittals.

§ 9.9.2 Shop Drawings, Product Data, Samples and similar submittals are not Contract Documents.

§ 9.9.3 The Contractor shall not be required to provide professional services that constitute the practice of architecture or engineering unless such services are specifically required by the Contract Documents or unless the Contractor needs to provide such services in order to carry out the Contractor's own responsibilities. If professional design services or certifications by a design professional are specifically required, the Owner and the Architect will specify the performance and design criteria that such services must satisfy. The Contractor shall cause such services or certifications to be provided by an appropriately licensed design professional. If no criteria are specified, the design shall comply with applicable codes and ordinances. Each Party shall be entitled to rely upon the information provided by the other Party. The Architect will review and approve or take other appropriate action on submittals for the limited purpose of checking for conformance with information provided and the design concept expressed in the Contract Documents. The Architect's review of Shop Drawings, Product Data, Samples, and similar submittals shall be for the limited purpose of checking for conformance with information given and the design concept expressed in the Contract Documents. In performing such review, the Architect will approve, or take other appropriate action upon, the Contractor's Shop Drawings, Product Data, Samples, and similar submittals. The Contractor shall require that the licensed design professional carry comprehensive general liability and errors and omissions (professional liability) insurance coverage in the amounts and forms as specified in Article 17. In the event that the licensed design professional retained by the Contractor will be conducting on-site services or observations, the licensed design professional shall also carry worker's compensation insurance and comprehensive automobile liability in the amounts and forms as specified in Article 17.

§ 9.10 Use of Site

The Contractor shall confine operations at the site to areas permitted by applicable laws, statutes, ordinances, codes, rules and regulations, lawful orders of public authorities, and the Contract Documents and shall not unreasonably encumber the site with materials or equipment.

§ 9.11 Cutting and Patching

The Contractor shall be responsible for cutting, fitting, or patching required to complete the Work or to make its parts fit together properly.

§ 9.12 Cleaning Up

The Contractor shall keep the premises and surrounding area free from accumulation of waste materials and rubbish caused by operations under the Contract. At completion of the Work, the Contractor shall remove waste materials, rubbish, the Contractor's tools, construction equipment, machinery, and surplus material from and about the Project.

AIA Document A104™ – 2017 (formerly A107™ – 2007). Copyright © 1936, 1951, 1958, 1961, 1963, 1966, 1970, 1974, 1978, 1987, 1997, 2007 and 2017 by The American Institute of Architects. All rights reserved. The "American Institute of Architects," "AIA," the AIA Logo, and "AIA Contract Documents" are registered trademarks and may not be used without permission. This document was produced by AIA software at 12:42:22 ET on 07/09/2021 under Order No.5191009158 which expires on 01/30/2022, is not for resale, is licensed for one-time use only, and may only be used in accordance with the AIA Contract Documents® Terms of Service. To report copyright violations, e-mail copyright@aia.org.
User Notes: (1517236076)

§ 9.13 Access to Work

The Contractor shall provide the Owner and Architect with access to the Work in preparation and progress wherever located.

§ 9.14 Royalties, Patents and Copyrights

The Contractor shall pay all royalties and license fees. The Contractor shall defend suits or claims for infringement of copyrights and patent rights and shall hold the Owner and Architect harmless from loss on account thereof, but shall not be responsible for defense or loss when a particular design, process, or product of a particular manufacturer or manufacturers is required by the Contract Documents or where the copyright violations are contained in Drawings, Specifications or other documents prepared by the Owner or Architect. However, if an infringement of a copyright or patent is discovered by, or made known to, the Contractor, the Contractor shall be responsible for the loss unless the information is promptly furnished to the Architect.

§ 9.15 Indemnification

§ 9.15.1 To the fullest extent permitted by law, the Contractor shall indemnify and hold harmless the Owner, Architect, Architect's consultants, and agents and employees of any of them from and against claims, damages, losses and expenses, including but not limited to attorneys' fees, arising out of or resulting from performance of the Work, provided that such claim, damage, loss, or expense is attributable to bodily injury, sickness, disease or death, or to injury to or destruction of tangible property (other than the Work itself), but only to the extent caused by the negligent acts or omissions of the Contractor, a Subcontractor, anyone directly or indirectly employed by them, or anyone for whose acts they may be liable, regardless of whether or not such claim, damage, loss, or expense is caused in part by a party indemnified hereunder. The Contractor also shall indemnify and hold harmless the Owner, Architect, Architect's consultants and agents and employees of any of them from and against all claims, damages, losses and expenses, including but not limited to attorneys' fees, arising out of or resulting from the Contractor's failure to comply with Section 19.7, Criminal History Checks, and from any bodily injury, sickness, disease or death caused by any non-"covered employee" who performs work on the Project Site. Such indemnification obligations shall not be construed to negate, abridge, or reduce other rights or obligations of indemnity which would otherwise exist as to a party or person described in this Section 9.15.1.

§ 9.15.2 In claims against any person or entity indemnified under this Section 9.15 by an employee of the Contractor, a Subcontractor, anyone directly or indirectly employed by them, or anyone for whose acts they may be liable, the indemnification obligation under Section 9.15.1 shall not be limited by a limitation on amount or type of damages, compensation or benefits payable by or for the Contractor or Subcontractor under workers' compensation acts, disability benefit acts or other employee benefit acts.

ARTICLE 10 ARCHITECT

§ 10.1 The Architect will provide administration of the Contract as described in the Contract Documents and will be an Owner's representative during construction, until the date the Architect issues the final Certificate for Payment. The Architect will have authority to act on behalf of the Owner only to the extent provided in the Contract Documents, unless otherwise modified in writing in accordance with other provisions of the Contract.

§ 10.2 Duties, responsibilities, and limitations of authority of the Architect as set forth in the Contract Documents shall not be restricted, modified, or extended without written consent of the Owner, Contractor, and Architect. Consent shall not be unreasonably withheld.

§ 10.3 The Architect will visit the site at intervals appropriate to the stage of the construction to become generally familiar with the progress and quality of the portion of the Work completed, and to determine in general, if the Work observed is being performed in a manner indicating that the Work, when fully completed, will be in accordance with the Contract Documents. However, the Architect will not be required to make exhaustive or continuous on-site inspections to check the quality or quantity of the Work. The Architect will not have control over, charge of, or responsibility for the construction means, methods, techniques, sequences, or procedures, or for safety precautions and programs in connection with the Work, since these are solely the Contractor's rights and responsibilities under the Contract Documents.

§ 10.4 On the basis of the site visits, the Architect will keep the Owner reasonably informed about the progress and quality of the portion of the Work completed, and promptly report to the Owner (1) known deviations from the

AIA Document A104™ – 2017 (formerly A107™ – 2007). Copyright © 1936, 1951, 1958, 1961, 1963, 1966, 1970, 1974, 1978, 1987, 1997, 2007 and 2017 by The American Institute of Architects. All rights reserved. The "American Institute of Architects," "AIA," the AIA Logo, and "AIA Contract Documents" are registered trademarks and may not be used without permission. This document was produced by AIA software at 12:42:22 ET on 07/09/2021 under Order No.5191009158 which expires on 01/30/2022, is not for resale, is licensed for one-time use only, and may only be used in accordance with the AIA Contract Documents® Terms of Service. To report copyright violations, e-mail copyright@aia.org.
User Notes: (1517236076)

Contract Documents, (2) known deviations from the most recent construction schedule submitted by the Contractor, and (3) defects and deficiencies observed in the Work. The Architect will not be responsible for the Contractor's failure to perform the Work in accordance with the requirements of the Contract Documents. The Architect will not have control over or charge of and will not be responsible for acts or omissions of the Contractor, Subcontractors, or their agents or employees, or any other persons or entities performing portions of the Work.

§ 10.5 Based on the Architect's evaluations of the Work and of the Contractor's Applications for Payment, the Architect will review and certify the amounts due the Contractor and will issue Certificates for Payment in such amounts.

§ 10.6 The Architect has authority to reject Work that does not conform to the Contract Documents and to require inspection or testing of the Work.

§ 10.7 The Architect will review and approve or take other appropriate action upon, the Contractor's submittals such as Shop Drawings, Product Data, and Samples, but only for the limited purpose of checking for conformance with information given and the design concept expressed in the Contract Documents.

§ 10.8 The Architect will interpret and decide matters concerning performance under, and requirements of, the Contract Documents on written request of either the Owner or Contractor. The Architect will make initial decisions on all claims, disputes, and other matters in question between the Owner and Contractor but will not be liable for results of any interpretations or decisions rendered in good faith.

§ 10.9 The Architect's decisions on matters relating to aesthetic effect will be final if consistent with the intent expressed in the Contract Documents.

ARTICLE 11 SUBCONTRACTORS

§ 11.1 A Subcontractor is a person or entity who has a direct contract with the Contractor to perform a portion of the Work at the site.

§ 11.2 Unless otherwise stated in the Contract Documents, the Contractor, within ten (10) days after award of the Contract, shall notify the Owner and Architect of the Subcontractors or suppliers proposed for each of the principal portions of the Work. The Contractor shall not contract with any Subcontractor or supplier to whom the Owner or Architect has made reasonable written objection within ten days after receipt of the Contractor's list of Subcontractors and suppliers. If the proposed but rejected Subcontractor was reasonably capable of performing the Work, the Contract Sum and Contract Time shall be increased or decreased by the difference, if any, occasioned by such change, and an appropriate Change Order shall be issued before commencement of the substitute Subcontractor's Work. The Contractor shall not be required to contract with anyone to whom the Contractor has made reasonable objection.

§ 11.3 Contracts between the Contractor and Subcontractors shall (1) require each Subcontractor, to the extent of the Work to be performed by the Subcontractor, to be bound to the Contractor by the terms of the Contract Documents, and to assume toward the Contractor all the obligations and responsibilities, including the responsibility for safety of the Subcontractor's Work, which the Contractor, by the Contract Documents, assumes toward the Owner and Architect, and (2) allow the Subcontractor the benefit of all rights, remedies and redress against the Contractor that the Contractor, by these Contract Documents, has against the Owner.

ARTICLE 12 CONSTRUCTION BY OWNER OR BY SEPARATE CONTRACTORS

§ 12.1 The term "Separate Contractor(s)" shall mean other contractors retained by the Owner under separate agreements. The Owner reserves the right to perform construction or operations related to the Project with the Owner's own forces, and with Separate Contractors retained under Conditions of the Contract substantially similar to those of this Contract, including those provisions of the Conditions of the Contract related to insurance and waiver of subrogation.

§ 12.2 The Contractor shall afford the Owner and Separate Contractors reasonable opportunity for introduction and storage of their materials and equipment and performance of their activities, and shall connect and coordinate the Contractor's activities with theirs as required by the Contract Documents.

AIA Document A104™ – 2017 (formerly A107™ – 2007). Copyright © 1936, 1951, 1958, 1961, 1963, 1966, 1970, 1974, 1978, 1987, 1997, 2007 and 2017 by The American Institute of Architects. All rights reserved. The "American Institute of Architects," "AIA," the AIA Logo, and "AIA Contract Documents" are registered trademarks and may not be used without permission. This document was produced by AIA software at 12:42:22 ET on 07/09/2021 under Order No.5191009158 which expires on 01/30/2022, is not for resale, is licensed for one-time use only, and may only be used in accordance with the AIA Contract Documents® Terms of Service. To report copyright violations, e-mail copyright@aia.org.
User Notes: (1517236076)

§ 12.3 The Owner shall be reimbursed by the Contractor for costs incurred by the Owner which are payable to a Separate Contractor because of delays, improperly timed activities, or defective construction of the Contractor. The Owner shall be responsible to the Contractor for costs incurred by the Contractor because of delays, improperly timed activities, damage to the Work, or defective construction of a Separate Contractor.

ARTICLE 13 CHANGES IN THE WORK

§ 13.1 By appropriate Modification, changes in the Work may be accomplished after execution of the Contract. The Owner, without invalidating the Contract, may order changes in the Work within the general scope of the Contract consisting of additions, deletions, or other revisions, with the Contract Sum and Contract Time being adjusted accordingly. Such changes in the Work shall be authorized by written Change Order signed by the Owner, Contractor, and Architect, or by written Construction Change Directive signed by the Owner and Architect. Upon issuance of the Change Order or Construction Change Directive, the Contractor shall proceed promptly with such changes in the Work, unless otherwise provided in the Change Order or Construction Change Directive.

§ 13.2 Adjustments in the Contract Sum and Contract Time resulting from a change in the Work shall be determined by mutual agreement of the parties or, in the case of a Construction Change Directive signed only by the Owner and Architect, by the Contractor's cost of labor, material, equipment, and reasonable overhead and profit, unless the parties agree on another method for determining the cost or credit. Pending final determination of the total cost of a Construction Change Directive, the Contractor may request payment for Work completed pursuant to the Construction Change Directive. The Architect will make an interim determination of the amount of payment due for purposes of certifying the Contractor's monthly Application for Payment. When the Owner and Contractor agree on adjustments to the Contract Sum and Contract Time arising from a Construction Change Directive, the Architect will prepare a Change Order.

§ 13.3 The Architect will have authority to order minor changes in the Work not involving adjustment in the Contract Sum or extension of the Contract Time and not inconsistent with the intent of the Contract Documents. Such changes shall be effected by written order and shall be binding on the Owner and Contractor. The Contractor shall carry out such written orders promptly. If the Contractor believes that the proposed minor change in the Work will affect the Contract Sum or Contract Time, the Contractor shall notify the Architect and shall not proceed to implement the change in the Work.

§ 13.4 If concealed or unknown physical conditions are encountered at the site that differ materially from those indicated in the Contract Documents or from those conditions ordinarily found to exist, the Contract Sum and Contract Time shall be equitably adjusted as mutually agreed between the Owner and Contractor; provided that the Contractor provides notice to the Owner and Architect promptly and before conditions are disturbed.

ARTICLE 14 TIME

§ 14.1 Time limits stated in the Contract Documents are of the essence of the Contract. By executing this Agreement the Contractor confirms that the Contract Time is a reasonable period for performing the Work.

§ 14.2 Unless otherwise provided, Contract Time is the period of time, including authorized adjustments, allotted in the Contract Documents for Substantial Completion of the Work.

§ 14.3 The term "day" as used in the Contract Documents shall mean calendar day unless otherwise specifically defined.

§ 14.4 The date of Substantial Completion is the date certified by the Architect in accordance with Section 15.6.3.

§ 14.5 If the Contractor is delayed at any time in the commencement or progress of the Work by (1) changes ordered in the Work; (2) by labor disputes, fire, unusual delay in deliveries, abnormal adverse weather conditions not reasonably anticipatable, unavoidable casualties, or any causes beyond the Contractor's control; or (3) by other causes that the Contractor asserts, and the Architect determines, justify delay, then the Contract Time shall be extended for such reasonable time as the Architect may determine, subject to the provisions of Article 21.

AIA Document A104™ – 2017 (formerly A107™ – 2007). Copyright © 1936, 1951, 1958, 1961, 1963, 1966, 1970, 1974, 1978, 1987, 1997, 2007 and 2017 by The American Institute of Architects. All rights reserved. The "American Institute of Architects," "AIA," the AIA Logo, and "AIA Contract Documents" are registered trademarks and may not be used without permission. This document was produced by AIA software at 12:42:22 ET on 07/09/2021 under Order No.5191009158 which expires on 01/30/2022, is not for resale, is licensed for one-time use only, and may only be used in accordance with the AIA Contract Documents® Terms of Service. To report copyright violations, e-mail copyright@aia.org.
User Notes: (1517236076)

ARTICLE 15 PAYMENTS AND COMPLETION

§ 15.1 Schedule of Values

§ 15.1.1 The Contractor shall submit a schedule of values to the Architect before the first Application for Payment, allocating the entire Stipulated Sum to the various portions of the Work. The schedule of values shall be prepared in the form, and supported by the data to substantiate its accuracy required by the Architect. This schedule of values shall be used as a basis for reviewing the Contractor's Applications for Payment.

§ 15.1.2 The allocation of the Stipulated Sum under this Section 15.1 shall not constitute a separate stipulated sum or guaranteed maximum price for each individual line item in the schedule of values.

§ 15.2 [omit]

(Paragraphs deleted)

§ 15.3 Applications for Payment

§ 15.3.1 At least ten days before the date established for each progress payment, the Contractor shall submit to the Architect an itemized Application for Payment prepared in accordance with the schedule of values, if required under Section 15.1, for completed portions of the Work. The application shall be notarized, if required; be supported by all data substantiating the Contractor's right to payment that the Owner or Architect require; shall reflect retainage if provided for in the Contract Documents; and include any revised cost control information required by Section 15.2.4. Applications for Payment shall not include requests for payment for portions of the Work for which the Contractor does not intend to pay a Subcontractor or supplier, unless such Work has been performed by others whom the Contractor intends to pay.

§ 15.3.2 [omit]

§ 15.3.3 Payments shall be made on account of materials and equipment delivered and suitably stored at the site for subsequent incorporation in the Work. If approved in advance by the Owner, payment may similarly be made for materials and equipment stored, and protected from damage, off the site at a location agreed upon in writing.

§ 15.3.4 The Contractor warrants that title to all Work covered by an Application for Payment will pass to the Owner no later than the time of payment. The Contractor further warrants that upon submittal of an Application for Payment all Work for which Certificates for Payment have been previously issued and payments received from the Owner shall, to the best of the Contractor's knowledge, information and belief, be free and clear of liens, claims, security interests or other encumbrances adverse to the Owner's interests.

§ 15.4 Certificates for Payment

§ 15.4.1 The Architect will, within seven days after receipt of the Contractor's Application for Payment, either issue to the Owner a Certificate for Payment, with a copy to the Contractor, for such amount as the Architect determines is properly due, or notify the Contractor and Owner of the Architect's reasons for withholding certification in whole or in part as provided in Section 15.4.3.

§ 15.4.2 The issuance of a Certificate for Payment will constitute a representation by the Architect to the Owner, based on the Architect's evaluations of the Work and the data in the Application for Payment, that, to the best of the Architect's knowledge, information, and belief, the Work has progressed to the point indicated, the quality of the Work is in accordance with the Contract Documents, and the Contractor is entitled to payment in the amount certified. The foregoing representations are subject to an evaluation of the Work for conformance with the Contract Documents upon Substantial Completion, to results of subsequent tests and inspections, to correction of minor deviations from the Contract Documents prior to completion and to specific qualifications expressed by the Architect. However, the issuance of a Certificate for Payment will not be a representation that the Architect has (1) made exhaustive or continuous on-site inspections to check the quality or quantity of the Work; (2) reviewed construction means, methods, techniques, sequences, or procedures; (3) reviewed copies of requisitions received from Subcontractors and suppliers and other data requested by the Owner to substantiate the Contractor's right to payment; or (4) made examination to ascertain how or for what purpose the Contractor has used money previously paid on account of the Contract Sum.

§ 15.4.3 The Architect may withhold a Certificate for Payment in whole or in part, to the extent reasonably necessary to protect the Owner, if in the Architect's opinion the representations to the Owner required by Section 15.4.2 cannot

AIA Document A104™ – 2017 (formerly A107™ – 2007). Copyright © 1936, 1951, 1958, 1961, 1963, 1966, 1970, 1974, 1978, 1987, 1997, 2007 and 2017 by The American Institute of Architects. All rights reserved. The "American Institute of Architects," "AIA," the AIA Logo, and "AIA Contract Documents" are registered trademarks and may not be used without permission. This document was produced by AIA software at 12:42:22 ET on 07/09/2021 under Order No.5191009158 which expires on 01/30/2022, is not for resale, is licensed for one-time use only, and may only be used in accordance with the AIA Contract Documents® Terms of Service. To report copyright violations, e-mail copyright@aia.org.
User Notes: (1517236076)

be made. If the Architect is unable to certify payment in the amount of the Application, the Architect will notify the Contractor and Owner as provided in Section 15.4.1. If the Contractor and the Architect cannot agree on a revised amount, the Architect will promptly issue a Certificate for Payment for the amount for which the Architect is able to make such representations to the Owner. The Architect may also withhold a Certificate for Payment or, because of subsequently discovered evidence, may nullify the whole or a part of a Certificate for Payment previously issued, to such extent as may be necessary in the Architect's opinion to protect the Owner from loss for which the Contractor is responsible, including loss resulting from acts and omissions described in Section 9.2.2, because of

.1 defective Work not remedied;
.2 third-party claims filed or reasonable evidence indicating probable filing of such claims unless security acceptable to the Owner is provided by the Contractor;
.3 failure of the Contractor to make payments properly to Subcontractors or suppliers for labor, materials or equipment;
.4 reasonable evidence that the Work cannot be completed for the unpaid balance of the Contract Sum;
.5 damage to the Owner or a Separate Contractor;
.6 reasonable evidence that the Work will not be completed within the Contract Time and that the unpaid balance would not be adequate to cover actual or liquidated damages for the anticipated delay; or
.7 repeated failure to carry out the Work in accordance with the Contract Documents.

§ 15.4.4 When either party disputes the Architect's decision regarding a Certificate for Payment under Section 15.4.3, in whole or in part, that party may submit a Claim in accordance with Article 21.

§ 15.5 Progress Payments

§ 15.5.1 The Contractor shall pay each Subcontractor, no later than seven days after receipt of payment from the Owner, the amount to which the Subcontractor is entitled, reflecting percentages actually retained from payments to the Contractor on account of the Subcontractor's portion of the Work. The Contractor shall, by appropriate agreement with each Subcontractor, require each Subcontractor to make payments to sub-subcontractors in a similar manner.

§ 15.5.2 Neither the Owner nor Architect shall have an obligation to pay or see to the payment of money to a Subcontractor or supplier except as may otherwise be required by law. The Owner has the right to request written evidence from the Contractor that the Contractor has properly paid Subcontractors and material and equipment suppliers amounts paid by the Owner to the Contractor for subcontracted Work. If the Contractor fails to furnish such evidence within seven (7) calendar days, the Owner shall have the right to contact Subcontractors to ascertain whether they have been properly paid.

§ 15.5.3 A Certificate for Payment, a progress payment, or partial or entire use or occupancy of the Project by the Owner shall not constitute acceptance of Work not in accordance with the Contract Documents.

§ 15.5.4 Provided the Owner has fulfilled its payment obligations under the Contract Documents, the Contractor shall defend and indemnify the Owner from all loss, liability, damage or expense, including reasonable attorney's fees and litigation expenses, arising out of any lien claim or other claim for payment by any Subcontractor or supplier of any tier. Upon receipt of notice of a lien claim or other claim for payment, the Owner shall notify the Contractor. If approved by the applicable court, when required, the Contractor may substitute a surety bond for the property against which the lien or other claim for payment has been asserted.

§ 15.6 Substantial Completion

§ 15.6.1 Substantial Completion is the stage in the progress of the Work when the Work or designated portion thereof is sufficiently complete in accordance with the Contract Documents so that the Owner can occupy or utilize the Work for its intended use.

§ 15.6.2 When the Contractor considers that the Work, or a portion thereof which the Owner agrees to accept separately, is substantially complete, the Contractor shall prepare and submit to the Architect a comprehensive list of items to be completed or corrected prior to final payment. Failure to include an item on such list does not alter the responsibility of the Contractor to complete all Work in accordance with the Contract Documents.

§ 15.6.3 Upon receipt of the Contractor's list, the Architect will make an inspection to determine whether the Work or designated portion thereof is substantially complete. When the Architect determines that the Work or designated portion thereof is substantially complete, the Architect will issue a Certificate of Substantial Completion which shall

AIA Document A104™ – 2017 (formerly A107™ – 2007). Copyright © 1936, 1951, 1958, 1961, 1963, 1966, 1970, 1974, 1978, 1987, 1997, 2007 and 2017 by The American Institute of Architects. All rights reserved. The "American Institute of Architects," "AIA," the AIA Logo, and "AIA Contract Documents" are registered trademarks and may not be used without permission. This document was produced by AIA software at 12:42:22 ET on 07/09/2021 under Order No.5191009158 which expires on 01/30/2022, is not for resale, is licensed for one-time use only, and may only be used in accordance with the AIA Contract Documents® Terms of Service. To report copyright violations, e-mail copyright@aia.org.
User Notes: (1517236076)

establish the date of Substantial Completion; establish responsibilities of the Owner and Contractor for security, maintenance, heat, utilities, damage to the Work and insurance; and fix the time within which the Contractor shall finish all items on the list accompanying the Certificate. Warranties required by the Contract Documents shall commence on the date of Substantial Completion of the Work or designated portion thereof unless otherwise provided in the Certificate of Substantial Completion.

§ 15.6.4 The Certificate of Substantial Completion shall be submitted to the Owner and Contractor for their written acceptance of responsibilities assigned to them in the Certificate. Upon such acceptance and consent of surety, if any, the Owner shall make payment of retainage applying to the Work or designated portion thereof. Such payment shall be adjusted for Work that is incomplete or not in accordance with the requirements of the Contract Documents.

§ 15.7 Final Completion and Final Payment

§ 15.7.1 Upon receipt of the Contractor's notice that the Work is ready for final inspection and acceptance and upon receipt of a final Application for Payment, the Architect will promptly make such inspection and, when the Architect finds the Work acceptable under the Contract Documents and the Contract fully performed, the Architect will promptly issue a final Certificate for Payment stating that to the best of the Architect's knowledge, information and belief, and on the basis of the Architect's on-site visits and inspections, the Work has been completed in accordance with the Contract Documents and that the entire balance found to be due the Contractor and noted in the final Certificate is due and payable. The Architect's final Certificate for Payment will constitute a further representation that conditions stated in Section 15.7.2 as precedent to the Contractor's being entitled to final payment have been fulfilled.

§ 15.7.2 Final payment shall not become due until the Contractor has delivered to the Owner all documents required in Section 4.2.1 along with a complete release of all liens arising out of this Contract or receipts in full covering all labor, materials and equipment for which a lien could be filed, or a bond satisfactory to the Owner to indemnify the Owner against such lien, an affidavit that payrolls, bills for materials and equipment, and other indebtedness connected with the Work have been paid or otherwise satisfied, and consent of surety to final payment. If such lien remains unsatisfied after payments are made, the Contractor shall refund to the Owner all money that the Owner may be compelled to pay in discharging such lien, including costs and reasonable attorneys' fees. Before final payment can be made, Department of Labor Division of Employment Form No. 16, Certificate of Contribution Status, must be received from the State of Nebraska Department of Labor certifying that the Contractor and each of its Subcontractors have paid all contributions and interest due to and including the calendar quarter immediately preceding the date of Substantial Completion.

§ 15.7.3 The making of final payment shall
(Paragraphs deleted)
not constitute a waiver of any claims by the Owner.

§ 15.7.4 Acceptance of final payment by the Contractor, a Subcontractor or supplier shall constitute a waiver of claims by that payee except those previously made in writing and identified by that payee as unsettled at the time of the final Application for Payment.

§ 15.5.5 PAYMENT CONTINGENT UPON AVAILABILITY OF APPROPRIATED FUNDS OR FUNDS APPROVED BY BOARD OF EDUCATION

Any other provisions of the Contract Documents to the contrary notwithstanding, it is expressly understood and agreed that the legal obligation of the Owner to pay the Contract Sum or any part thereof shall be contingent upon the availability of funds specifically approved by formal action of the Board of Education of the COLFAX COUNTY SCHOOL DISTRICT 19-0123, A/K/A SCHUYLER COMMUNITY SCHOOLS for the purpose of payment of the Contract Sum or any part thereof. lt is agreed that the obligations of the Contractor herein are expressly contingent upon reasonable proof to the Contractor that the Owner has funds specifically approved by formal action of the Board of Education of the COLFAX COUNTY SCHOOL DISTRICT 19-0123, A/K/A SCHUYLER COMMUNITY SCHOOLS for the purpose of payment of the Contract Sum or any part thereof.

AIA Document A104™ – 2017 (formerly A107™ – 2007). Copyright © 1936, 1951, 1958, 1961, 1963, 1966, 1970, 1974, 1978, 1987, 1997, 2007 and 2017 by The American Institute of Architects. All rights reserved. The "American Institute of Architects," "AIA," the AIA Logo, and "AIA Contract Documents" are registered trademarks and may not be used without permission. This document was produced by AIA software at 12:42:22 ET on 07/09/2021 under Order No.5191009158 which expires on 01/30/2022, is not for resale, is licensed for one-time use only, and may only be used in accordance with the AIA Contract Documents® Terms of Service. To report copyright violations, e-mail copyright@aia.org.
User Notes: (1517236076)

ARTICLE 16 PROTECTION OF PERSONS AND PROPERTY

§ 16.1 Safety Precautions and Programs

The Contractor shall be responsible for initiating, maintaining, and supervising all safety precautions and programs in connection with the performance of the Contract. The Contractor shall take reasonable precautions for safety of, and shall provide reasonable protection to prevent damage, injury, or loss to

.1 employees on the Work and other persons who may be affected thereby;

.2 the Work and materials and equipment to be incorporated therein, whether in storage on or off the site, under care, custody, or control of the Contractor, a Subcontractor, or a Sub-subcontractor; and

.3 other property at the site or adjacent thereto, such as trees, shrubs, lawns, walks, pavements, roadways, structures and utilities not designated for removal, relocation, or replacement in the course of construction.

The Contractor shall comply with, and give notices required by, applicable laws, statutes, ordinances, codes, rules and regulations, and lawful orders of public authorities bearing on safety of persons and property and their protection from damage, injury, or loss. The Contractor shall promptly remedy damage and loss to property caused in whole or in part by the Contractor, a Subcontractor, a sub-subcontractor, or anyone directly or indirectly employed by any of them, or by anyone for whose acts they may be liable and for which the Contractor is responsible under Sections 16.1.2 and 16.1.3. The Contractor may make a claim for the cost to remedy the damage or loss to the extent such damage or loss is attributable to acts or omissions of the Owner or Architect or by anyone for whose acts either of them may be liable, and not attributable to the fault or negligence of the Contractor. The foregoing obligations of the Contractor are in addition to the Contractor's obligations under Section 9.15.

§ 16.2 Hazardous Materials and Substances

§ 16.2.1 The Contractor is responsible for compliance with the requirements of the Contract Documents regarding hazardous materials or substances. If the Contractor encounters a hazardous material or substance not addressed in the Contract Documents, and if reasonable precautions will be inadequate to prevent foreseeable bodily injury or death to persons resulting from a material or substance, including but not limited to asbestos or polychlorinated biphenyl (PCB), encountered on the site by the Contractor, the Contractor shall, upon recognizing the condition, immediately stop Work in the affected area and notify the Owner and Architect of the condition. When the material or substance has been rendered harmless, Work in the affected area shall resume upon written agreement of the Owner and Contractor. By Change Order, the Contract Time shall be extended appropriately and the Contract Sum shall be increased in the amount of the Contractor's reasonable additional costs of shutdown, delay, and start-up.

§ 16.2.2 The Contractor shall provide written certification that no materials used in the Work contain lead or asbestos materials in them in excess of amounts allowed by federal, state or local standards, laws, codes, rules and regulations; the Federal Environmental Protection Agency (EPA) standards; and/or the Federal Occupational Safety and Health Administration (OSHA) standards, whichever is most restrictive. The Contractor shall provide this written certification as part of submittals under the Section in the Project Manual related to Contract Closeout.

(Paragraph deleted)

ARTICLE 17 INSURANCE AND BONDS

§ 17.1 Contractor's Insurance

§ 17.1.1 The Contractor shall purchase and maintain insurance of the types and limits of liability, containing the endorsements, and subject to the terms and conditions, as described in this Section 17.1 or elsewhere in the Contract Documents. The Contractor shall purchase and maintain the insurance required by this Agreement from an insurance company or insurance companies lawfully authorized to issue insurance in the jurisdiction where the Project is located. The Contractor shall maintain the required insurance until the expiration of the period for correction of Work as set forth in Section 18.4, unless a different duration is stated below:

§ 17.1.2 Commercial General Liability insurance for the Project written on an occurrence form with policy limits provided below, providing coverage for claims including

.1 damages because of bodily injury, sickness or disease, including occupational sickness or disease, and death of any person;

.2 personal and advertising injury;

AIA Document A104™ – 2017 (formerly A107™ – 2007). Copyright © 1936, 1951, 1958, 1961, 1963, 1966, 1970, 1974, 1978, 1987, 1997, 2007 and 2017 by The American Institute of Architects. All rights reserved. The "American Institute of Architects," "AIA," the AIA Logo, and "AIA Contract Documents" are registered trademarks and may not be used without permission. This document was produced by AIA software at 12:42:22 ET on 07/09/2021 under Order No.5191009158 which expires on 01/30/2022, is not for resale, is licensed for one-time use only, and may only be used in accordance with the AIA Contract Documents® Terms of Service. To report copyright violations, e-mail copyright@aia.org.
User Notes: (1517236076)

.3 damages because of physical damage to or destruction of tangible property, including the loss of use of such property;

.4 bodily injury or property damage arising out of completed operations; and

.5 the Contractor's indemnity obligations under Section 9.15.

Annual Unencumbered Limits of Liability (minimum)

Each Occurrence	$ 1,000,000
General Aggregate	$ 2,000,000

Specific Policy Coverages	Annual Unencumbered Limits of Liability (minimum)	
	Occurrence	Aggregate
Products / Completed Operations	$ 1,000,000	$ 2,000,000
Personal / Advertising Injury	$ 1,000,000	$ 2,000,000
Premises – Operations	$ 1,000,000	$ 2,000,000
Property Damage (broad form)	$ 1,000,000	$ 2,000,000
Contractual	$ 1,000,000	$ 2,000,000

Notes:

.1 Insurance on occurrence basis.

.2 General aggregate is per project.

.3 Deductible not to exceed $ 10,000 per occurrence.

.4 Contractual coverage to include construction contracts and subcontracts.

.5 Contractor to carry completed operations coverage for three (3) years following Substantial Completion (need certificate of insurance for each of three (3) years).

.6 Contractor and each Subcontractor shall have issued a separate policy.

.7 The policies for Contractor and each Subcontractor shall provide a blanket waiver of subrogation in favor of Owner and Architect.

.8 The policies for Contractor and each Subcontractor shall name Owner, Architect, and Architect's consultants as additional insureds.

.9 Additional insured endorsement to cover vicarious liability including completed operation.

.10 Policy shall have removed fellow employee exclusion.

.11 Modified Notice of Occurrence, for supervisors and up.

.12 Thirty (30) Day notice of cancellation basis.

.13 Policy may exclude cover for : Asbestos, Nuclear Energy, Engineers/Architect's E&O.

§ 17.1.3 Automobile Liability covering vehicles owned by the Contractor and non-owned, hired and leased vehicles used by the Contractor, with a minimum combined single limit of not less than One Million Dollars ($ 1,000,000) per accident, for bodily injury, death of any person, and property damage arising out of the ownership, maintenance, and use of those motor vehicles along with any other statutorily required automobile coverage. Insurance must include contractual liability coverage. If applicable, policy shall provide auto cargo pollution endorsement (ISO CA 99 48, or equivalent). If work to be performed by Contractor includes construction or demolition operations within 50 feet of any railroad property and affecting any railroad bridge or trestle, tracks, road beds, tunnel, under- pass, or crossing, then such policy will include coverage for work done within 50 feet of a railroad right of way. Insurance shall be on occurrence basis. Coverages shall include: comprehensive form; owned; hired and non-owned; bodily injury and property damage. Contractor and each subcontractor shall have issued a separate policy. The policies for Contractor and each Subcontractor shall provide a blanket waiver of subrogation in favor of Owner and Architect. The policies for Contractor and each Subcontractor shall name Owner, Architect, and Architect's consultants as additional insureds.

§ 17.1.4 The Contractor may achieve the required limits and coverage for Commercial General Liability and Automobile Liability through a combination of primary and excess or umbrella liability insurance, provided such primary and excess or umbrella insurance policies result in the same or greater coverage as those required under Section 17.1.2 and 17.1.3, and in no event shall any excess or umbrella liability insurance provide narrower coverage than the primary policy. The excess policy shall not require the exhaustion of the underlying limits only through the actual payment by the underlying insurers. The additional insured coverage shall be primary and non-contributory to any of the Owner's insurance policies and shall apply to both ongoing and completed operations.

§ 17.1.5 Workers' Compensation at statutory limits.

AIA Document A104™ – 2017 (formerly A107™ – 2007). Copyright © 1936, 1951, 1958, 1961, 1963, 1966, 1970, 1974, 1978, 1987, 1997, 2007 and 2017 by The American Institute of Architects. All rights reserved. The "American Institute of Architects," "AIA," the AIA Logo, and "AIA Contract Documents" are registered trademarks and may not be used without permission. This document was produced by AIA software at 12:42:22 ET on 07/09/2021 under Order No.5191009158 which expires on 01/30/2022, is not for resale, is licensed for one-time use only, and may only be used in accordance with the AIA Contract Documents® Terms of Service. To report copyright violations, e-mail copyright@aia.org.
User Notes: (1517236076)

§ 17.1.6 Employers' Liability with policy limits not less than Five Hundred Thousand Dollars ($ 500,00) each accident, Five Hundred Thousand Dollars ($ 500,000) each employee, and Five Hundred Thousand Dollars ($ 500,000) policy limit. Each contractor and each subcontractor shall provide a blanket waiver of subrogation. Contractor and each Subcontractor issued a separate policy.

§ 17.1.7 If the Contractor is required to furnish professional services as part of the Work, the Contractor shall procure Professional Liability insurance covering performance of the professional services, with policy limits as follows: Where the Contact Sum is less than $500,000, policy limits shall be not less than One Million Dollars ($ 1,000,000) per claim and One Million Dollars ($ 1,000,000) in the aggregate; where the Contract Sum is greater than $500,000 but less than $1,000,000, policy limits shall be not less than Two Million Dollars ($ 2,000,000) per claim and Two Million Dollars ($ 2,000,000) in the aggregate. Insurance is required as per Section 9.9.3. Insurance may be on occurrence or claims-made basis. The Aggregate is per Project. Any deductible shall not to exceed $ 100,000 per occurrence. The policies shall provide a blanket waiver of subrogation in favor of Owner and Architect. The insurance shall remain in full force and effect for a period of three (3) years after the termination of this Agreement or the completion of the Contractor's services hereunder, whichever occurs later in time. The obligation to maintain Professional Liability insurance coverage shall survive termination of this Agreement.

§ 17.1.8 If the Work involves the transport, dissemination, use, or release of pollutants, the Contractor shall procure Pollution Liability insurance, with policy limits of not less than One Million Dollars ($ 1,000,000) per claim and One Million Dollars ($ 1,000,000) in the aggregate.

§ 17.1.9 Coverage under Sections 17.1.7 and 17.1.8 may be procured through a Combined Professional Liability and Pollution Liability insurance policy, with combined policy limits of not less than Two Million Dollars ($ 2,000,000) per claim and Two Million Dollars ($ 2,000,000) in the aggregate.

§ 17.1.10 The Contractor shall provide certificates of insurance acceptable to the Owner evidencing compliance with the requirements in this Section 17.1 at the following times: (1) prior to commencement of the Work; (2) upon renewal or replacement of each required policy of insurance; and (3) upon the Owner's written request. An additional certificate evidencing continuation of liability coverage, including coverage for completed operations, shall be submitted with the final Application for Payment and thereafter upon renewal or replacement of such coverage until the expiration of the period required by Section 17.1.1. The certificates will show the Owner as an additional insured on the Contractor's Commercial General Liability and excess or umbrella liability policy.

§ 17.1.11 The Contractor shall disclose to the Owner any deductible or self- insured retentions applicable to any insurance required to be provided by the Contractor.

§ 17.1.12 To the fullest extent permitted by law, the Contractor shall cause the commercial liability coverage required by this Section 17.1 to include (1) the Owner, the Architect, and the Architect's Consultants as additional insureds for claims caused in whole or in part by the Contractor's negligent acts or omissions during the Contractor's operations; and (2) the Owner as an additional insured for claims caused in whole or in part by the Contractor's negligent acts or omissions for which loss occurs during completed operations. The additional insured coverage shall be primary and non-contributory to any of the Owner's general liability insurance policies and shall apply to both ongoing and completed operations. To the extent commercially available, the additional insured coverage shall be no less than that provided by Insurance Services Office, Inc. (ISO) forms CG 20 10 07 04, CG 20 37 07 04, and, with respect to the Architect and the Architect's Consultants, CG 20 32 07 04.

§ 17.1.13 Within three (3) business days of the date the Contractor becomes aware of an impending or actual cancellation or expiration of any insurance required by this Section 17.1, the Contractor shall provide notice to the Owner of such impending or actual cancellation or expiration. Upon receipt of notice from the Contractor, the Owner shall, unless the lapse in coverage arises from an act or omission of the Owner, have the right to stop the Work until the lapse in coverage has been cured by the procurement of replacement coverage by the Contractor. The furnishing of notice by the Contractor shall not relieve the Contractor of any contractual obligation to provide any required coverage.

§ 17.1.14 Excess liability coverage as follows:

AIA Document A104™ – 2017 (formerly A107™ – 2007). Copyright © 1936, 1951, 1958, 1961, 1963, 1966, 1970, 1974, 1978, 1987, 1997, 2007 and 2017 by The American Institute of Architects. All rights reserved. The "American Institute of Architects," "AIA," the AIA Logo, and "AIA Contract Documents" are registered trademarks and may not be used without permission. This document was produced by AIA software at 12:42:22 ET on 07/09/2021 under Order No.5191009158 which expires on 01/30/2022, is not for resale, is licensed for one-time use only, and may only be used in accordance with the AIA Contract Documents® Terms of Service. To report copyright violations, e-mail copyright@aia.org.
User Notes: (1517236076)

Annual Unencumbered Limits of Liability (minimum)	Occurrence	Aggregate
Contract Sum < $ 500,000	$ 1,000,000	$ 1,000,000
$ 500,000 ≤ Contract Sum < $ 1,000,000	$ 2,000,000	$ 2,000,000

Notes:

.1 Insurance on occurrence basis.

.2 Aggregate is per Project.

.3 Contractor and each Subcontractor shall have issued a separate policy.

.4 The policies for Contractor and each Subcontractor shall provide a blanket waiver of subrogation in favor of Owner and Architect

.5 The policies for Contractor and each Subcontractor shall name Owner, Architect, and Architect's consultants as additional insureds

§ 17.2 Owner's Insurance

§ 17.2.1 Owner's Liability Insurance

The Owner shall be responsible for purchasing and maintaining the Owner's usual liability insurance.

§ 17.2.2 Property Insurance

§ 17.2.2.1 The Owner shall purchase and maintain, from an insurance company or insurance companies lawfully authorized to issue insurance in the jurisdiction where the Project is located, property insurance written on a builder's risk "all-risks" completed value or equivalent policy form and sufficient to cover the total value of the entire Project on a replacement cost basis. The Owner's property insurance coverage shall be no less than the amount of the initial Contract Sum, plus the value of subsequent Modifications and labor performed or materials or equipment supplied by others. The property insurance shall be maintained until Substantial Completion and thereafter as provided in Section 17.2.2.2, unless otherwise provided in the Contract Documents or otherwise agreed in writing by the parties to this Agreement. This insurance shall include the interests of the Owner, Contractor, Subcontractors, and Sub-subcontractors in the Project as insureds.

§ 17.2.2.2 Unless the parties agree otherwise, upon Substantial Completion, the Owner shall continue the insurance required by Section 17.2.2.1 or, if necessary, replace the insurance policy required under Section 17.2.2.1 with property insurance written for the total value of the Project that shall remain in effect until expiration of the period for correction of the Work set forth in Section 18.4.

§ 17.2.2.3 If the insurance required by this Section 17.2.2 is subject to deductibles or self-insured retentions, the Contractor shall be responsible for all loss not covered because of such deductibles or retentions.

§ 17.2.2.4 If the Work involves remodeling an existing structure or constructing an addition to an existing structure, the Owner shall purchase and maintain, until the expiration of the period for correction of Work as set forth in Section 18.4, "all-risks" property insurance, on a replacement cost basis, protecting the existing structure against direct physical loss or damage, notwithstanding the undertaking of the Work. The Owner shall be responsible for all co-insurance penalties.

§ 17.2.2.5 Prior to commencement of the Work, the Owner shall secure the insurance, and provide evidence of the coverage, required under this Section 17.2.2 and, upon the Contractor's request, provide a copy of the property insurance policy or policies required by this Section 17.2.2. The copy of the policy or policies provided shall contain all applicable conditions, definitions, exclusions, and endorsements.

§ 17.2.2.6 Within three (3) business days of the date the Owner becomes aware of an impending or actual cancellation or expiration of any insurance required by this Section 17.2.2, the Owner shall provide notice to the Contractor of such impending or actual cancellation or expiration. Unless the lapse in coverage arises from an act or omission of the Contractor: (1) the Contractor, upon receipt of notice from the Owner, shall have the right to stop the Work until the lapse in coverage has been cured by the procurement of replacement coverage by either the Owner or the Contractor; (2) the Contract Time and Contract Sum shall be equitably adjusted; and (3) the Owner waives all rights against the Contractor, Subcontractors, and Sub-subcontractors to the extent any loss to the Owner would have been covered by the insurance had it not expired or been cancelled. If the Contractor purchases replacement coverage, the cost of the insurance shall be charged to the Owner by an appropriate Change Order. The furnishing of notice by the Owner shall not relieve the Owner of any contractual obligation to provide required insurance.

AIA Document A104™ – 2017 (formerly A107™ – 2007). Copyright © 1936, 1951, 1958, 1961, 1963, 1966, 1970, 1974, 1978, 1987, 1997, 2007 and 2017 by The American Institute of Architects. All rights reserved. The "American Institute of Architects," "AIA," the AIA Logo, and "AIA Contract Documents" are registered trademarks and may not be used without permission. This document was produced by AIA software at 12:42:22 ET on 07/09/2021 under Order No.5191009158 which expires on 01/30/2022, is not for resale, is licensed for one-time use only, and may only be used in accordance with the AIA Contract Documents® Terms of Service. To report copyright violations, e-mail copyright@aia.org.
User Notes: (1517236076)

§ 17.2.2.7 Waiver of Subrogation

§ 17.2.2.7.1 The Owner and Contractor waive all rights against (1) each other and any of their subcontractors, sub-subcontractors, agents, and employees, each of the other; (2) the Architect and Architect's consultants; and (3) Separate Contractors, if any, and any of their subcontractors, sub-subcontractors, agents, and employees, for damages caused by fire, or other causes of loss, to the extent those losses are covered by property insurance required by this Agreement or other property insurance applicable to the Project, except such rights as they have to proceeds of such insurance. The Owner or Contractor, as appropriate, shall require similar written waivers in favor of the individuals and entities identified above from the Architect, Architect's consultants, Separate Contractors, subcontractors, and sub-subcontractors. The policies of insurance purchased and maintained by each person or entity agreeing to waive claims pursuant to this Section 17.2.2.7 shall not prohibit this waiver of subrogation. This waiver of subrogation shall be effective as to a person or entity (1) even though that person or entity would otherwise have a duty of indemnification, contractual or otherwise, (2) even though that person or entity did not pay the insurance premium directly or indirectly, or (3) whether or not the person or entity had an insurable interest in the damaged property.

§ 17.2.2.7.2 If during the Project construction period the Owner insures properties, real or personal or both, at or adjacent to the site by property insurance under policies separate from those insuring the Project, or if after final payment property insurance is to be provided on the completed Project through a policy or policies other than those insuring the Project during the construction period, to the extent permissible by such policies, the Owner waives all rights in accordance with the terms of Section 17.2.2.7.1 for damages caused by fire or other causes of loss covered by this separate property insurance.

§ 17.2.2.8 A loss insured under the Owner's property insurance shall be adjusted by the Owner as fiduciary and made payable to the Owner as fiduciary for the insureds, as their interests may appear, subject to requirements of any applicable mortgagee clause. The Owner shall pay the Architect and Contractor their just shares of insurance proceeds received by the Owner, and by appropriate agreements, written where legally required for validity, the Architect and Contractor shall make payments to their consultants and Subcontractors in similar manner.

(Table deleted)
(Paragraphs deleted)

§ 17.3 Performance Bond and Payment Bond

§ 17.3.1 The Contractor shall furnish, as required by Neb. Rev. Stat. § 52-118, bonds covering payment and performance of obligations arising under the Contract with minimum Best Rating "A". Bonds may be obtained through the Contractor's usual source and the cost thereof shall be included in the Contract Sum. The amount of the payment bond shall be equal to one hundred percent (100%) of the Contract Sum.

§ 17.3.2 Upon the request of any person or entity appearing to be a potential beneficiary of bonds covering payment of obligations arising under the Contract, the Contractor shall promptly furnish a copy of the bonds or shall authorize a copy to be furnished.

§ 17.3.3 The Contractor shall deliver the required bonds to the Owner not later than five (5) business days after execution of the Contract by the Owner. All bonds will be reviewed by the Architect for compliance with the Contract Documents. In the event that the Architect has any questions concerning the sufficiency of the bonds, the bonds will be referred to the Owner or the Owner's Representative with Architect's recommendation.

ARTICLE 18 CORRECTION OF WORK

§ 18.1 The Contractor shall promptly correct Work rejected by the Architect or failing to conform to the requirements of the Contract Documents, whether discovered before or after Substantial Completion and whether or not fabricated, installed, or completed. Costs of correcting such rejected Work, including additional testing and inspections, the cost of uncovering and replacement, and compensation for the Architect's services and expenses made necessary thereby, shall be at the Contractor's expense.

§ 18.2 In addition to the Contractor's obligations under Section 9.4, if, within one year after the date of Substantial Completion of the Work or designated portion thereof or after the date for commencement of warranties established under Section 15.6.3, or by terms of an applicable special warranty required by the Contract Documents, any of the Work is found to be not in accordance with the requirements of the Contract Documents, the Contractor shall correct it promptly after receipt of notice from the Owner to do so unless the Owner has previously given the Contractor a

AIA Document A104™ – 2017 (formerly A107™ – 2007). Copyright © 1936, 1951, 1958, 1961, 1963, 1966, 1970, 1974, 1978, 1987, 1997, 2007 and 2017 by The American Institute of Architects. All rights reserved. The "American Institute of Architects," "AIA," the AIA Logo, and "AIA Contract Documents" are registered trademarks and may not be used without permission. This document was produced by AIA software at 12:42:22 ET on 07/09/2021 under Order No.5191009158 which expires on 01/30/2022, is not for resale, is licensed for one-time use only, and may only be used in accordance with the AIA Contract Documents® Terms of Service. To report copyright violations, e-mail copyright@aia.org.
User Notes: (1517236076)

written acceptance of such condition. The Owner shall give such notice promptly after discovery of the condition. During the one-year period for correction of Work, if the Owner fails to notify the Contractor and give the Contractor an opportunity to make the correction, the Owner waives the rights to require correction by the Contractor and to make a claim for breach of warranty.

§ 18.3 If the Contractor fails to correct nonconforming Work within a reasonable time, the Owner may correct it in accordance with Section 8.3.

§ 18.4 The one-year period for correction of Work shall be extended with respect to portions of Work first performed after Substantial Completion by the period of time between Substantial Completion and the actual completion of that portion of the Work.

§ 18.5 The one-year period for correction of Work shall not be extended by corrective Work performed by the Contractor pursuant to this Article 18.

§ 18.6 The one-year period for correction of Work shall in no way modify or alter the limitations period for commencement of any claims or causes of action by the Owner, whether in contract, tort, breach of warranty or otherwise. THE CONTRACTUAL ONE YEAR PERIOD FOR CORRECTION OF THE WORK IS IN ADDITION TO ALL WARRANTY OBLIGATIONS OF THE CONTRACTOR AND SHALL NOT BE APPLIED TO LIMIT ANY APPLICABLE STATUTORY PERIOD OF LIMITATION OR REPOSE.

ARTICLE 19 MISCELLANEOUS PROVISIONS

§ 19.1 Assignment of Contract

Neither party to the Contract shall assign the Contract without written consent of the other, except that the Owner may, without consent of the Contractor, assign the Contract to a lender providing construction financing for the Project if the lender assumes the Owner's rights and obligations under the Contract Documents. The Contractor shall execute all consents reasonably required to facilitate such assignment.

§ 19.2 Governing Law

The Contract shall be governed by the law of the State of Nebraska and, where applicable, federal laws. Exclusive jurisdiction and venue shall be in the state or federal courts in Colfax County, Nebraska.

§ 19.3 Tests and Inspections

Tests, inspections, and approvals of portions of the Work required by the Contract Documents or by applicable laws, statutes, ordinances, codes, rules and regulations, or lawful orders of public authorities shall be made at an appropriate time. Unless otherwise provided, the Contractor shall make arrangements for such tests, inspections, and approvals with an independent testing laboratory or entity acceptable to the Owner, or with the appropriate public authority, and shall bear all related costs of tests, inspections, and approvals. The Contractor shall give the Architect timely notice of when and where tests and inspections are to be made so that the Architect may be present for such procedures. The Owner shall bear costs of tests, inspections, or approvals that do not become requirements until after bids are received or negotiations concluded. The Owner shall directly arrange and pay for tests, inspections, or approvals where building codes or applicable laws or regulations so require.

§ 19.4 The Owner's representative:
(Name, address, email address and other information)

Dan Hoesing, Superintendent
120 W. 20th Street
Schuyler, Nebraska 68661
Tel: 402-352-5514
Email: dan.hoesing@schuylercommunityschools.org

§ 19.5 The Contractor's representative:
(Name, address, email address and other information)

Mike Brandt, President
2512 12th Street

AIA Document A104™ – 2017 (formerly A107™ – 2007). Copyright © 1936, 1951, 1958, 1961, 1963, 1966, 1970, 1974, 1978, 1987, 1997, 2007 and 2017 by The American Institute of Architects. All rights reserved. The "American Institute of Architects," "AIA," the AIA Logo, and "AIA Contract Documents" are registered trademarks and may not be used without permission. This document was produced by AIA software at 12:42:22 ET on 07/09/2021 under Order No.5191009158 which expires on 01/30/2022, is not for resale, is licensed for one-time use only, and may only be used in accordance with the AIA Contract Documents® Terms of Service. To report copyright violations, e-mail copyright@aia.org.
User Notes: (1517236076)

Columbus, NE 68601
Tel: 402-564-3021
Email: mgsi@megavision.com

§ 19.6 Neither the Owner's nor the Contractor's representative shall be changed without ten days' prior notice to the other party.

§ 19.7 Equal Opportunity in Employment

§ 19.7.1 The Contractor and any subcontractors shall not discriminate against any employee or applicant for employment to be employed in the performance of the Agreement, with respect to hire, tenure, terms, conditions or privileges of employment, because of sex, disability, race, color, religion, veteran status, national or ethnic origin, age, marital status, pregnancy, childbirth or related medical condition, or other protected status, as prohibited by the Nebraska Fair Employment Practice Act or federal law. The Contractor agrees to post in conspicuous places available to employees and applicants, notices setting forth the Contractor's nondiscrimination policies. The Contractor and the Contractor's subcontractors shall, in all solicitations or advertisements for employees placed by them or on their behalf, state that all qualified applicants will receive consideration for employment without regard to sex, disability, race, color, religion, veteran status, national or ethnic origin, age, marital status, pregnancy, childbirth or related medical condition, or other protected status.

§ 19.7.2 The Contractor hereby warrants and represents that it is in compliance with said Act. Any failure to so comply during the performance of this Agreement shall be a material breach of the Agreement. The Contractor by execution of this agreement certifies that the Contractor is an equal opportunity employer and actively recruits a well-qualified and diverse staff including minority applicants as well as historically underutilized business subcontractors, and does not discriminate against any employee or applicant for employment or subcontractor by reason of sex, disability, race, color, religion, veteran status, national or ethnic origin, age, marital status, pregnancy, childbirth or related medical condition, or other protected status. By execution of this agreement, the Contractor agrees to actively continue and implement this policy throughout any awarded project.

§ 19.8 Criminal History Checks

§ 19.8.1 The Contractor shall obtain all criminal history information regarding its "covered employees", as defined below. Before beginning any Work on the Project, Contractor, and all subcontractors and suppliers, will provide written certification to the Owner that Contractor has complied with the statutory requirements as of that date. Upon request by Owner, Contractor will provide, in writing, updated certifications and the names and any other requested information regarding covered employees, so that the Owner may obtain criminal history record information on the covered employees. Contractor shall assume all expenses associated with obtaining the initial criminal history record information and the Owner shall be responsible for expenses associated with any subsequent request. Contractor shall include similar criminal history check provisions in all contracts with subcontractors and suppliers.

§ 19.8.2 The Contractor will not assign any "covered employee" with a "disqualifying criminal history", as those terms are defined below, to work on the Project. If the Contractor receives information that a covered employee has a reported disqualifying criminal history, then Contractor will immediately remove the covered employee from the Project and notify the Owner in writing within three (3) business days. If the Owner objects to the assignment of any covered employee on the basis of the covered employee's criminal history record information, then Contractor agrees to discontinue using that covered employee to provide services on Owner's Project.

§ 19.8.3 For the purposes of this Section, "covered employees" means employees, agents or subcontractors of Contractor who has or will have continuing duties related to the services to be performed on Owner's Project and has or will have direct contact with Owner's students. The Owner will decide what constitutes direct contact with Owner's students. "Disqualifying criminal history" means any conviction or other criminal history of the following offenses: a felony offense under Nebraska Criminal Code Article 3 Offenses Against The Person; an offense for which a defendant is required to register as a sex offender under the Nebraska Sex Offender Registration Act, Neb. Rev. Stat. §§ 29-4001 et seq.

§ 19.8.4 The Contractor shall establish a school building construction site security protocol which shall include providing all employees of the contractors, employees of sub-contractors to the contractors, and other project related personnel with a "Project" badge or sticker created by the Contractor; each badge or sticker shall have a unique identifier number. This unique identifier number must be logged by the Contractor's Site Superintendent or Project

AIA Document A104™ – 2017 (formerly A107™ – 2007). Copyright © 1936, 1951, 1958, 1961, 1963, 1966, 1970, 1974, 1978, 1987, 1997, 2007 and 2017 by The American Institute of Architects. All rights reserved. The "American Institute of Architects," "AIA," the AIA Logo, and "AIA Contract Documents" are registered trademarks and may not be used without permission. This document was produced by AIA software at 12:42:22 ET on 07/09/2021 under Order No.5191009158 which expires on 01/30/2022, is not for resale, is licensed for one-time use only, and may only be used in accordance with the AIA Contract Documents® Terms of Service. To report copyright violations, e-mail copyright@aia.org.
User Notes: (1517236076)

Manager so as to associate each individual's name and company with the number on the badge. A copy of the log shall be kept at all times in the office of the Contractor's Site Superintendent and must be submitted to the Owner's Administrative office at the end of each week. If wearing the Contractor-provided "Project" badge is not desirable and will interfere with the work being performed by that individual, the Contractor shall provide a sticker with the necessary information for identification for affected personnel, which shall include the unique number on the identification. This sticker may be affixed to the individual worker's hard hats. All means of identification other than what is provided by the Contractor must be approved by the Contractor's on-site Superintendent or Project Manager prior to implementation by the contractor. Identification must be visible at all times. Personnel failing to comply with the job-site security requirements may be required by the Contractor or Owner's personnel to leave the job-site.

§ 19.9 Contributions under Nebraska Employment Security Law

The Contractor and all Subcontractors engaged to perform any part of the Work shall make payment to the Unemployment Compensation Fund of the State of Nebraska of all contributions and interest due under the provisions of the Employment Security Law, Neb. Rev. Stat. §§ 48-601, et seq. (Reissue 1988), as amended, on wages paid to individuals employed in the performance of the Contract; and before final payment shall be made of the final three percent (3%) of this Contract, the Contractor shall secure and file with the Owner, and cause any Subcontractor to secure and file with the Owner, written clearance from the Commissioner of the Department of Labor of the State of Nebraska, certifying that all payments then due of contributions or interest which may have arisen under this Contract have been made by the Contractor or any Subcontractor to the Unemployment Compensation Fund.

§ 19.10 Verification of Immigration Status

§ 19.10.1 The Contractor agrees to use the federal immigration verification system to determine the work eligibility status of new employees physically performing services on the Project within the State of Nebraska. The federal immigration verification system means the electronic verification of the work authorization program authorized by the Illegal Immigration Reform and Immigrant Responsibility Act of 1996, 8 U.S.C. 1324a, known as the E-Verify Program, or an equivalent federal program designated by the United States Department of Homeland Security or other federal agency authorized to verify the work eligibility status of a newly hired employee. This requirement applies to all Subcontractors of the Contractor. The Contractor shall, by written agreement, require compliance with the federal immigration verification system by all Subcontractors. If the Contractor is an individual or sole proprietorship, the following applies:

.1 The Contractor must complete the United States Citizenship Attestation Form, available on the Department of Administrative Services website at www.das.state.ne.us.

.2 If the Contractor indicates on such attestation form that he or she is a qualified alien, the Contractor agrees to provide the US Citizenship and Immigration Services documentation required to verify the Contractor's lawful presence in the United States using the Systematic Alien Verification for Entitlements (SAVE) Program.

.3 The Contractor understands and agrees that lawful presence in the United States is required and the Contractor may be disqualified or the contract terminated if such lawful presence cannot be verified as required by Neb. Rev. Stat. §4-108.

§ 19.11 Sovereign Immunity

By entering into this Agreement, the Owner does not waive any of its immunities from suit and/or liability, except as otherwise specifically provided herein and as specifically authorized by law.

§ 19.12 Nebraska Employee Classification Act

Contractor agrees to abide by the provisions of the Nebraska Employee Classification Act, Neb. Rev. Stat. §§ 48-2901 to 48-2912. In compliance with that Act, the Contractor shall to submit to the Owner, upon execution of the Agreement, the affidavit marked as Appendix D, attached hereto and incorporated herein by this reference. The Contractor further acknowledges that providing a false affidavit under Neb. Rev. Stat. § 48-2911 may subject the Contractor to the penalties of perjury and upon a second or subsequent violation the Contractor shall be barred from contracting with the State of Nebraska or any Nebraska political subdivision for a period of three (3) years after the date of discovery of the falsehood. The Contractor shall require any and all subcontractors who perform work pursuant to the Agreement to provide a similar affidavit, which shall be made available to the Owner upon request.

AIA Document A104™ – 2017 (formerly A107™ – 2007). Copyright © 1936, 1951, 1958, 1961, 1963, 1966, 1970, 1974, 1978, 1987, 1997, 2007 and 2017 by The American Institute of Architects. All rights reserved. The "American Institute of Architects," "AIA," the AIA Logo, and "AIA Contract Documents" are registered trademarks and may not be used without permission. This document was produced by AIA software at 12:42:22 ET on 07/09/2021 under Order No.5191009158 which expires on 01/30/2022, is not for resale, is licensed for one-time use only, and may only be used in accordance with the AIA Contract Documents® Terms of Service. To report copyright violations, e-mail copyright@aia.org.
User Notes: (1517236076)

ARTICLE 20 TERMINATION OF THE CONTRACT

§ 20.1 Termination by the Contractor

If the Architect fails to certify payment as provided in Section 15.4.1 for a period of 30 days through no fault of the Contractor, or if the Owner fails to make payment as provided in Section 4.1.3 for a period of 30 days, the Contractor may, upon seven additional days' notice to the Owner and the Architect, terminate the Contract and recover from the Owner payment for Work executed, including reasonable overhead and profit, costs incurred by reason of such termination, and damages.

§ 20.2 Termination by the Owner for Cause

§ 20.2.1 The Owner may terminate the Contract if the Contractor

- **.1** repeatedly refuses or fails to supply enough properly skilled workers or proper materials;
- **.2** fails to make payment to Subcontractors for materials or labor in accordance with the respective agreements between the Contractor and the Subcontractors;
- **.3** repeatedly disregards applicable laws, statutes, ordinances, codes, rules and regulations, or lawful orders of a public authority; or
- **.4** otherwise is guilty of substantial breach of a provision of the Contract Documents.

§ 20.2.2 When any of the reasons described in Section 20.2.1 exists, the Owner, upon certification by the Architect that sufficient cause exists to justify such action, may, without prejudice to any other remedy the Owner may have and after giving the Contractor seven days' notice, terminate the Contract and take possession of the site and of all materials, equipment, tools, and construction equipment and machinery thereon owned by the Contractor and may finish the Work by whatever reasonable method the Owner may deem expedient. Upon request of the Contractor, the Owner shall furnish to the Contractor a detailed accounting of the costs incurred by the Owner in finishing the Work.

§ 20.2.3 When the Owner terminates the Contract for one of the reasons stated in Section 20.2.1, the Contractor shall not be entitled to receive further payment until the Work is finished.

§ 20.2.4 If the unpaid balance of the Contract Sum exceeds costs of finishing the Work, including compensation for the Architect's services and expenses made necessary thereby, and other damages incurred by the Owner and not expressly waived, such excess shall be paid to the Contractor. If such costs and damages exceed the unpaid balance, the Contractor shall pay the difference to the Owner. The amount to be paid to the Contractor or Owner, as the case may be, shall be certified by the Architect, upon application, and this obligation for payment shall survive termination of the Contract.

§ 20.3 Termination by the Owner for Convenience

The Owner may, at any time, terminate the Contract for the Owner's convenience and without cause. The Owner shall pay the Contractor for Work executed; and costs incurred by reason of such termination, including costs attributable to termination of

(Paragraphs deleted)

Subcontracts, but no overhead and profit on the Work not executed.

ARTICLE 21 CLAIMS AND DISPUTES

§ 21.1 Claims, disputes, and other matters in question arising out of or relating to this Contract, including those alleging an error or omission by the Architect but excluding those arising under Section 16.2, shall be referred initially to the Architect for decision. Such matters, except those waived as provided for in Section 21.11 and Sections 15.7.3 and 15.7.4, shall, after initial decision by the Architect or 30 days after submission of the matter to the Architect, be subject to mediation as a condition precedent to binding dispute resolution.

§ 21.2 Notice of Claims

§ 21.2.1 Claims by either the Owner or Contractor, where the condition giving rise to the Claim is first discovered prior to expiration of the period for correction of the Work set forth in Section 18.2, shall be initiated by notice to the Architect within 21 days after occurrence of the event giving rise to such Claim or within 21 days after the claimant first recognizes the condition giving rise to the Claim, whichever is later.

§ 21.2.2 Claims by either the Owner or Contractor, where the condition giving rise to the Claim is first discovered after expiration of the period for correction of the Work set forth in Section 18.2, shall be initiated by notice to the other party.

AIA Document A104™ – 2017 (formerly A107™ – 2007). Copyright © 1936, 1951, 1958, 1961, 1963, 1966, 1970, 1974, 1978, 1987, 1997, 2007 and 2017 by The American Institute of Architects. All rights reserved. The "American Institute of Architects," "AIA," the AIA Logo, and "AIA Contract Documents" are registered trademarks and may not be used without permission. This document was produced by AIA software at 12:42:22 ET on 07/09/2021 under Order No.5191009158 which expires on 01/30/2022, is not for resale, is licensed for one-time use only, and may only be used in accordance with the AIA Contract Documents® Terms of Service. To report copyright violations, e-mail copyright@aia.org.
User Notes: (1517236076)

§ 21.3 Time Limits on Claims
The Owner and Contractor shall commence all claims and causes of action against the other and arising out of or related to the Contract in accordance with the requirements of the final dispute resolution method selected in this Agreement whether in contract, tort, breach of warranty, or otherwise, within the period specified by applicable law.

§ 21.4 If a claim, dispute or other matter in question relates to or is the subject of a mechanic's lien, the party asserting such matter may proceed in accordance with applicable law to comply with the lien notice or filing deadlines.

§ 21.5 The parties shall endeavor to resolve their disputes by mediation. A request for mediation shall be made in writing, delivered to the other party to this Agreement, and filed with the person or entity administering the mediation. The request may be made concurrently with the binding dispute resolution but, in such event, mediation shall proceed in advance of binding dispute resolution proceedings, which shall be stayed pending mediation for a period of 60 days from the date of filing, unless stayed for a longer period by agreement of the parties or court order.

§ 21.6 Notwithstanding anything to the contrary in the Contract Documents or in any document forming a part hereof, there shall be no mandatory arbitration for any dispute arising hereunder.

(Paragraphs deleted)
§ 21.10 Continuing Contract Performance
Pending final resolution of a Claim, except as otherwise agreed in writing, the Contractor shall proceed diligently with performance of the Contract and the Owner shall continue to make payments in accordance with the Contract Documents.

§ 21.11 Waiver of Claims for Consequential Damages
The Contractor waives claims against the Owner for consequential damages arising out of or relating to this
(Paragraphs deleted)
Contract, including but not limited to damages incurred by the Contractor for principal office expenses including the compensation of personnel stationed there, for losses of financing, business and reputation, and for loss of profit except anticipated profit arising directly from the Work. The Owner expressly reserves any and all claims for consequential damages arising out of or relating to this Contract.

ARTICLE 22 DAVIS BACON ACT
§ 22.1 This project may be financed by the Owner in whole or in part with funds provided through the Elementary and Secondary School Emergency Relief Fund ("ESSER") and other federal funds. ESSER funds are subject to the Davis-Bacon Act ("DBA") prevailing wage rate and other requirements. The Contractor, and all subcontractors, shall comply with all federal, state and local laws, ordinances and regulations applicable to this federally-funded project, including but not limited to, the provisions of the DBA, as it now exists and as it may be amended or supplemented from time to time, and any regulations promulgated thereto, including the specific requirements contained in 29 C.F.R. § 5.5 and Appendix F and Exhibit 1 attached to and made a part of this Contract.

§ 22.2 The Contractor and all Subcontractors hired by the Contractor on this project agree to and shall provide and submit to proper authorities all necessary written documentation and certifications in accordance with all reporting requirements of the DBA. The Contractor shall require that the contracts of all Subcontractors hired by the Contractor on this project contain contract provisions identical to the provisions contained in this section, including Appendix F and Exhibit 1.

§ 22.3 A breach of any of the provisions contained in this Article 22 or a failure to comply with any of the requirements under the DBA, as it now exists and as it may be amended or supplemented from time to time, and any regulations promulgated thereto, by the Contractor or any of its Subcontractors shall constitute a substantial and material breach of the Contract Documents and shall be sufficient grounds for termination of the contract by the Owner.

§ 22.4 To the fullest extent permitted by law, the Contractor shall indemnify, defend, and hold harmless the Owner, its Board of Education, administrators, employees and agents, and the Architect, Architect's consultants, agents and employees of any of them from and against all claims, damages, suites, losses, expenses or causes of action which

AIA Document A104™ – 2017 (formerly A107™ – 2007). Copyright © 1936, 1951, 1958, 1961, 1963, 1966, 1970, 1974, 1978, 1987, 1997, 2007 and 2017 by The American Institute of Architects. All rights reserved. The "American Institute of Architects," "AIA," the AIA Logo, and "AIA Contract Documents" are registered trademarks and may not be used without permission. This document was produced by AIA software at 12:42:22 ET on 07/09/2021 under Order No.5191009158 which expires on 01/30/2022, is not for resale, is licensed for one-time use only, and may only be used in accordance with the AIA Contract Documents® Terms of Service. To report copyright violations, e-mail copyright@aia.org.
User Notes: (1517236076)

arise as a result of the failure of the Contractor, Subcontractors, or officers, employees, or agents of any of them, to comply with any of the requirements of the DBA.

This Agreement entered into as of the day and year first written above.

Colfax County School District 19-0123, a/k/a Schuyler Community Schools	**Midwest Glass Service, Inc.**
OWNER *(Signature)*	**CONTRACTOR** *(Signature)*
(Printed name and title)	Daniel Nebuda, President *(Printed name and title)*

AIA Document A104™ – 2017 (formerly A107™ – 2007). Copyright © 1936, 1951, 1958, 1961, 1963, 1966, 1970, 1974, 1978, 1987, 1997, 2007 and 2017 by The American Institute of Architects. All rights reserved. The "American Institute of Architects," "AIA," the AIA Logo, and "AIA Contract Documents" are registered trademarks and may not be used without permission. This document was produced by AIA software at 12:42:22 ET on 07/09/2021 under Order No.5191009158 which expires on 01/30/2022, is not for resale, is licensed for one-time use only, and may only be used in accordance with the AIA Contract Documents® Terms of Service. To report copyright violations, e-mail copyright@aia.org.
User Notes: (1517236076)

Appendix B

CERTIFICATE OF LIABILITY INSURANCE

DATE (MM/DD/YYYY): 05/27/2021

THIS CERTIFICATE IS ISSUED AS A MATTER OF INFORMATION ONLY AND CONFERS NO RIGHTS UPON THE CERTIFICATE HOLDER. THIS CERTIFICATE DOES NOT AFFIRMATIVELY OR NEGATIVELY AMEND, EXTEND OR ALTER THE COVERAGE AFFORDED BY THE POLICIES BELOW. THIS CERTIFICATE OF INSURANCE DOES NOT CONSTITUTE A CONTRACT BETWEEN THE ISSUING INSURER(S), AUTHORIZED REPRESENTATIVE OR PRODUCER, AND THE CERTIFICATE HOLDER.

IMPORTANT: If the certificate holder is an ADDITIONAL INSURED, the policy(ies) must have ADDITIONAL INSURED provisions or be endorsed. If SUBROGATION IS WAIVED, subject to the terms and conditions of the policy, certain policies may require an endorsement. A statement on this certificate does not confer rights to the certificate holder in lieu of such endorsement(s).

PRODUCER	**CONTACT NAME:** Mitch Freshour
Weber Insurance Agency	**PHONE (A/C, No, Ext):** (402) 564-3239 **FAX (A/C, No):** (402) 563-1216
1762 26th Ave	**E-MAIL ADDRESS:** mitchf@gtagroup.com
Columbus NE 68601	
INSURED	
Midwest Glass Service Inc	
Po Box 184	
Columbus NE 68602	

INSURER(S) AFFORDING COVERAGE	NAIC #
INSURER A : Columbia National Insurance Company	19640
INSURER B : Columbia Mutual Insurance Company	40371
INSURER C : First Comp Underwriters	
INSURER D :	
INSURER E :	
INSURER F :	

COVERAGES **CERTIFICATE NUMBER:** CL2152732104 **REVISION NUMBER:**

THIS IS TO CERTIFY THAT THE POLICIES OF INSURANCE LISTED BELOW HAVE BEEN ISSUED TO THE INSURED NAMED ABOVE FOR THE POLICY PERIOD INDICATED. NOTWITHSTANDING ANY REQUIREMENT, TERM OR CONDITION OF ANY CONTRACT OR OTHER DOCUMENT WITH RESPECT TO WHICH THIS CERTIFICATE MAY BE ISSUED OR MAY PERTAIN, THE INSURANCE AFFORDED BY THE POLICIES DESCRIBED HEREIN IS SUBJECT TO ALL THE TERMS, EXCLUSIONS AND CONDITIONS OF SUCH POLICIES. LIMITS SHOWN MAY HAVE BEEN REDUCED BY PAID CLAIMS.

INSR LTR	TYPE OF INSURANCE	ADDL INSD	SUBR WVD	POLICY NUMBER	POLICY EFF (MM/DD/YYYY)	POLICY EXP (MM/DD/YYYY)	LIMITS	
A	[X] COMMERCIAL GENERAL LIABILITY [ ] CLAIMS-MADE [X] OCCUR GEN'L AGGREGATE LIMIT APPLIES PER: [ ] POLICY [ ] PRO-JECT [ ] LOC [ ] OTHER:			GRGNE0000017195	01/01/2021	01/01/2022	EACH OCCURRENCE DAMAGE TO RENTED PREMISES (Ea occurrence) MED EXP (Any one person) PERSONAL & ADV INJURY GENERAL AGGREGATE PRODUCTS - COMP/OP AGG	$ 1,000,000 $ 300,000 $ 5,000 $ 1,000,000 $ 3,000,000 $ 3,000,000
B	AUTOMOBILE LIABILITY [ ] ANY AUTO [ ] OWNED AUTOS ONLY [X] SCHEDULED AUTOS [ ] HIRED AUTOS ONLY [ ] NON-OWNED AUTOS ONLY			CAPNE0000017195	01/01/2021	01/01/2022	COMBINED SINGLE LIMIT (Ea accident) BODILY INJURY (Per person) BODILY INJURY (Per accident) PROPERTY DAMAGE (Per accident) Uninsured motorist	$ 1,000,000 $ $ $ $ 1,000,000
A	[X] UMBRELLA LIAB [ ] OCCUR [ ] EXCESS LIAB [ ] CLAIMS-MADE [ ] DED [ ] RETENTION $			CUPNE0000017195	01/01/2021	01/01/2022	EACH OCCURRENCE AGGREGATE	$ 2,000,000 $
C	WORKERS COMPENSATION AND EMPLOYERS' LIABILITY ANY PROPRIETOR/PARTNER/EXECUTIVE OFFICER/MEMBER EXCLUDED? Y / N [ ] (Mandatory in NH) If yes, describe under DESCRIPTION OF OPERATIONS below	N / A		WC0184696-04	01/01/2021	01/01/2022	[ ] PER STATUTE [ ] OTH-ER E.L. EACH ACCIDENT E.L. DISEASE - EA EMPLOYEE E.L. DISEASE - POLICY LIMIT	$ 500,000 $ 500,000 $ 500,000

DESCRIPTION OF OPERATIONS / LOCATIONS / VEHICLES (ACORD 101, Additional Remarks Schedule, may be attached if more space is required)

CERTIFICATE HOLDER

Schuyler Public Schools
120 W. 20th Street
Schuyler NE 68661

CANCELLATION

SHOULD ANY OF THE ABOVE DESCRIBED POLICIES BE CANCELLED BEFORE THE EXPIRATION DATE THEREOF, NOTICE WILL BE DELIVERED IN ACCORDANCE WITH THE POLICY PROVISIONS.

AUTHORIZED REPRESENTATIVE

© 1988-2015 ACORD CORPORATION. All rights reserved.

Appendix C

JOB SITE SECURITY REQUIREMENTS

Job-Site Security Protocol:

1. Prior to performing any work or entering on the Project site, all contractors and subcontractors, and suppliers and materialmen shall sign a "Contractor/Supplier Criminal Records Certification," a copy of which is attached hereto, certifying that such contractor shall not assign to work on the Schuyler Community Schools building project an employee having a criminal record as defined by the School District's policy, regulations, practices or directives and the general conditions of contract for the Project.

2. Schuyler Community Schools shall establish a school building construction site security protocol which shall include providing all employees of the contractors, employees of sub-contractors to the contractors, and other project related personnel with a "Project" badge or sticker created by Schuyler Community Schools; each badge or sticker shall have a unique identifier number. This unique identifier number must be logged by the Contractor's Site Superintendent or Project Manager so as to associate each individual's name and company with the number on the badge. A copy of the log shall be kept at all times in the office of the Contractor's Site Superintendent and must be submitted to the Schuyler Community Schools Superintendent's office at the end of each week. If wearing the Contractor-provided "Project" badge is not desirable and will interfere with the work being performed by that individual, the Contractor shall provide a sticker with the necessary information for identification for affected personnel, which shall include the unique number on the identification. This sticker may be affixed to the individual worker's hard hats. All means of identification other than what is provided by the Contractor must be approved by the Contractor's on-site Superintendent or Project Manager prior to implementation by the contractor. Identification must be visible at all times. Personnel failing to comply with the job-site security requirements may be required by the Contractor or Schuyler Community Schools' personnel to leave the job-site.

3. A copy of the list of properly certified works and other personnel authorized to be on the work site shall be provided by each contractor to the Contractor for the Project and kept in the on-site offices.

Appendix C

CRIMINAL RECORDS DIRECTIVE

(a) Definitions

1. "Disqualifying criminal history" shall mean any conviction or other criminal history information designated by the Owner, or one of the following offenses, if at the time of the offense, the victim was under 19 years of age or enrolled in a public school: a felony offense under Nebraska Criminal Code Article 3 Offenses Against The Person; an offense for which a defendant is required to register as a sex offender under the Nebraska Sex Offender Registration Act, Neb. Rev. Stat. §§ 29-4001 et seq.; or an equivalent offense under federal law or the laws of another state.

2. "Site of an Awarded Project" shall be defined to include the location of the physical work to be completed on the project where it is expected that minors under the age of 16 will be present on a regular basis during the completion of the contractors' scope work. The Site of an Awarded Project shall not include a Contractor's, Subcontractor's, or Supplier's home office.

(b) To help prevent any individuals or agents who have committed crimes of a serious nature from working at the site of an awarded project, the Contractor shall:

1. Require that each of its employees who are to work at the Site of an Awarded Project to complete the "Criminal Record Disclosure" prior to when the employee is to begin work at the Site of an Awarded Project.

Unless the Contractor has actual or constructive knowledge that an employee omitted information or misrepresented information in completing the Criminal Record Disclosure, the Contractor shall not be liable for damages incurred as a direct or indirect result of such omission or misrepresentation.

2. Include this provision in each of its subcontracts and require that each of its Subcontractors' employees complete the Criminal Record Disclosure prior to when the Subcontractor's employee is to begin work at Site of an Awarded Project.

Unless the Contractor or Subcontractor has actual or constructive knowledge that an employee omitted information or misrepresented information in completing the Criminal Record Disclosure, neither the Contractor nor the Subcontractor shall be liable for damages incurred as a direct or indirect result of such omission or misrepresentation.

3. Include this provision in each of its Supplier agreements where supplies are to be delivered to the Site of an Awarded Project by the Supplier and require that each of such Suppliers' employees complete the Criminal Record Disclosure prior to when the Supplier's employee is to deliver the supplies to the Site of an Awarded Project.

Unless the Contractor or Supplier has actual or constructive knowledge that an employee omitted information or misrepresented information in completing the Criminal Record Disclosure, neither the Contractor nor the Supplier shall be liable for damages incurred as a direct or indirect result of such omission or misrepresentation.

4. Upon receipt of the names of the questionnaire for each employee, the Contractor, Subcontractor or Supplier shall conduct a search on the Nebraska State Patrol - Sex-Offender Registry website, http://www.nsp.state.ne.us/SOR/find.cfm, to confirm such employee is not listed thereon.

5. In the event that the Contractor, Subcontractor or Supplier or School District determine that an employee as a record of crimes of a serious nature to immediately reassign and remove any individual or agent from the work site who is not in full compliance with the requirements of this paragraph.

Appendix C

CRIMINAL RECORD DISCLOSURE

This disclosure must be updated within 7 days of any NEW charges or convictions.

Name _____
Last First Middle
Address _____
Street City State Zip Code
Telephone Number (__)___-_____ Social Security Number _____-_____-_____

I understand the purpose of this document is to disclose to my employer any criminal events in my personal history that may preclude me from working on selected jobsites that contractually prohibit workers with a criminal record of a serious nature. I acknowledge the information provided is true and accurate. It is understood and agreed upon that any misrepresentation by me in this document will be sufficient cause for dismissal.

1. Have you ever been convicted of a felony? ☐ Yes ☐ No
   A conviction will not necessarily disqualify you from your current employment, but it may limit your ability to participate on specific projects. If yes, please attach a separate sheet detailing the nature of offense and terms of sentencing.
2. Have you been charged or convicted of any of the following crimes: (include date of any incident)
   Rape, including statutory rape? ☐ Yes ☐ No
   Sexual assault? ☐ Yes ☐ No
   Sexual conduct of any kind with a minor? ☐ Yes ☐ No
   Abuse of any kind of a minor or child? ☐ Yes ☐ No
   Endangerment of a child or debauching a minor? ☐ Yes ☐ No
   Public indecency? ☐ Yes ☐ No
   Prostitution, pandering, or keeping a place of prostitution? ☐ Yes ☐ No
   Assault or battery? ☐ Yes ☐ No
   Kidnapping, false imprisonment or abduction? ☐ Yes ☐ No
   Child pornography? ☐ Yes ☐ No
   Any offense in which a minor was a victim? ☐ Yes ☐ No
   If you answered yes to any of the above, please attach a separate sheet detailing the charge or conviction, including where the charge or conviction occurred, when the events giving rise to the event occurred, and any other information that you would like us to know about the charge or conviction.
3. Are you now, or have you ever been, listed as a Registered Sex Offender in any State?
   ☐ Yes ☐ No
4. Are you currently on probation or work release? ☐ Yes ☐ No
   If yes, for what charge and how long a duration?: _____
   _____
5. On a separate sheet, please identify each city, county, and state in which you have lived for more than three months and the approximate dates in which you lived in each location.

I hereby attest this information and the information attached to be true and accurate.

_____ _____
Signature of Employee Date

Appendix C

CONTRACTOR/SUBCONTRACTOR/SUPPLIER CRIMINAL RECORDS CERTIFICATION

Our firm hereby certifies and agrees not to knowingly assign or knowingly allow any individual or agent to do any work at the Schuyler Community Schools, or other locations under the Contract entered into between our firm and the Schuyler Community Schools, who has a criminal record of a serious nature as defined by Schuyler Community Schools policy, regulations, practices or directives, and as expressed in the "Schuyler Community Schools – Criminal Records Directive". A list of individual workers complying with this Directive is attached.

Our firm authorizes, gives consent, and agrees to periodically certify same to Schuyler Community Schools. Our firm further authorizes, gives consent, and agrees to cooperate in obtaining any additional authorization or consent necessary, to assure compliance with this requirement, and to immediately reassign and remove any individual or agent from the work site who the firm learns is not in full compliance with the requirements of this Certification.

Dated this ____ day of _____, 20____.

_____
Name of Contract Vendor

By: _____
An Authorized Official

Appendix C

CERTIFIED WORKER LIST

Firm Name: _____ Date: _____
Contractor/Subcontractor/Supplier

Worker Name	Years with Firm	General Job Description
_____	_____	_____
_____	_____	_____
_____	_____	_____
_____	_____	_____
_____	_____	_____

Appendix D

STATE OF NEBRASKA)
) ss.
COUNTY OF _____)

AFFIDAVIT

The undersigned ("Contractor") and Schuyler Community Schools ("SCS") have entered into a contract for the Contractor to perform construction or delivery services pursuant to the contract in regard to Window replacement project (the "Project"); and as such, the Contractor being first duly sworn, attests, deposes and states as follows:

A. That (1) each individual performing services for Contractor is properly classified under Neb. Rev. Stat. §§ 48-2901 to 48-2912 (the "Employee Classification Act"), (2) Contractor has completed a federal I-9 immigration form and has such form on file for each employee performing services, (3) Contractor has complied with Neb. Rev. Stat § 4-114, (4) Contractor has no reasonable basis to believe that any individual performing services for such Contractor is an undocumented worker, and (5) as of the time of this contract, Contractor is not barred from contracting with the state or any political subdivision pursuant to Neb. Rev. Stat. § 48-2912.

B. That Contractor agrees to and at all times shall follow and comply with all provisions of the Employee Classification Act. Contractor acknowledges that a violation of the Employee Classification Act is grounds for rescission of this contract by SCS. Contractor further acknowledges that providing a false affidavit under Neb. Rev. Stat. § 48-2911 to SCS may subject Contractor to the penalties of perjury and upon a second or subsequent violation Contractor shall be barred from contracting with the state or any political subdivision for a period of three years after the date of discovery of the falsehood. Contractor shall require any and all subcontractors who perform work under the contract on the Project to provide a similar affidavit, which shall be made available to SCS upon request.

C. That Contractor further agrees to and at all times shall follow and comply with all provisions of Neb. Rev. Stat. §§ 4-108 to 4-114 and shall use the federal immigration verification system to determine the work eligibility status of new employees physically performing services on the Project within the State of Nebraska. The federal immigration verification system means the electronic verification of the work authorization program authorized by the Illegal Immigration Reform and Immigrant Responsibility Act of 1996, 8 U.S.C. 1324a, known as the E-Verify Program, or an equivalent federal program designated by the United States Department of Homeland Security or other federal agency authorized to verify the work eligibility status of a newly hired employee. That Contractor understands this requirement applies to all Subcontractors of the Contractor. That the Contractor shall, by written agreement, require compliance with the federal immigration verification system by all Subcontractors. That if the Contractor is an individual or sole proprietorship, the following applies:

1. The Contractor must complete the United States Citizenship Attestation Form, available on the Department of Administrative Services website at www.das.state.ne.us.

2. If the Contractor indicates on such attestation form that he or she is a qualified alien, the Contractor agrees to provide the US Citizenship and Immigration Services documentation required to verify the Contractor's lawful presence in the United States using the Systematic Alien Verification for Entitlements (SAVE) Program.

3. The Contractor understands and agrees that lawful presence in the United States is required and the Contractor may be disqualified or the contract terminated if such lawful presence cannot be verified as required by section 4-108.

D. That under and pursuant to Neb. Rev. Stat. § 48-1122 and other laws, the Contractor agrees that the Contractor and his subcontractors shall not discriminate against any employee or applicant for employment, to be employed in the performance of such contract, with respect to his hire, tenure, terms, conditions, or privileges of employment, because of his race, color, religion, sex, disability, or national origin.

FURTHER AFFIANT SAYETH NOT.

DATED this _____ day of _____, 20__.

_____
Contractor

_____
Signature Contractor/Authorized Official of Contractor

Subscribed and sworn to before me this _____ day of _____, 20__.

_____
Notary Public

Appendix E

SPECIFICATIONS

1. High School windows:

- 23 total windows to be replaced
- 20 casement windows, with single window panel on top:
- 2 fixed windows, with window panel on top and bottom
- 1 hybrid window, with 2 fixed top window panels and crank-out bottom window panel
- Windows and locations determined by Owner
- Approved window manufacturers: Manko Window Systems (Manhattan, KS) or equivalent (as approved by Owner)
    - Manko 3527 AW80 series with crank outs
    - Manko 3527 AW80 series non movable
- Dimensions and other minimum specifications as provided on diagrams below
- Contractor responsible for disposal of old windows

Elevation: A1
Qty: 20
Series: 3527i AW80
Finish: Anodized
Color: Dark Bronze Class 1
Stacked: Horizontal
Dim Ref: Rough Opening
Width: 42"
Height: 79"
Screens: 2
Hinge: Butt
Limit Device No Limit Device
Locking: Roto Operator
Perimeter Surrounds:
Receptor: H(8140-24/841)
J(8140-24/841)
Sill Starter:16402-26

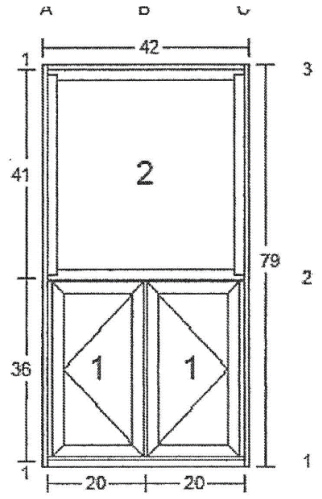

Elevation: A2
Qty: 2
Series: 3527i AW80
Finish: Anodized
Color: Dark Bronze Class 1
Stacked: Horizontal
Dim Ref: Rough Opening
Width: 42"
Height: 79"
Perimeter Surrounds:
Receptor: H(8140-24/841)
J(8140-24/841)
Sill Starter:16402-26

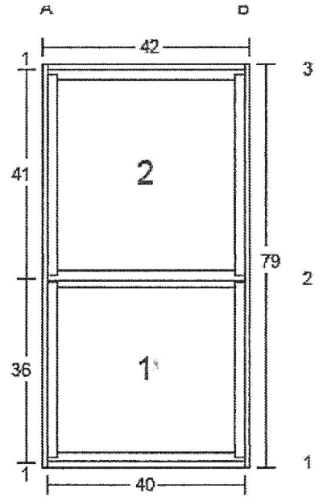

Elevation: A3
Qty: 1
Series: 3527i AW80
Finish: Anodized
Color: Dark Bronze Class 1
Stacked: Horizontal
Dim Ref: Rough Opening
Width: 62"
Height: 121"
Screens: 2
Hinge: Butt
Limit Device No Limit Device
Locking: Roto Operator
Perimeter Surrounds:
Receptor: H(8140-24/841)
J(8140-24/841)
Sill Starter:16402-26

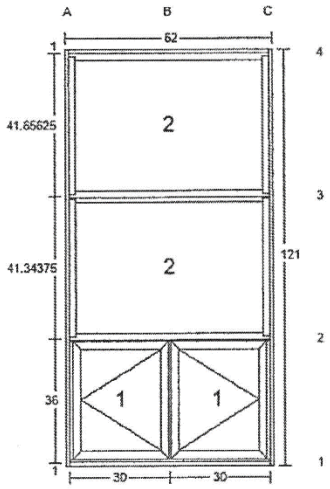

Glazing ID: 1
1" Insulated Glass (T/T)
3/16" Clear (TP)
5/8" Tri-Seal Black Air Spacer
3/16" Soft Coat Low-E Clear MC37 LE-T(TP) # 3
Surface
DSE + PIB Sealant

Glazing ID: 2
AP, 1, Std. Pt. Stucco EXTRA DARK BRONZE

2. Middle School windows:

- 30 total windows to be replaced
- 12 hybrid windows, with fixed top window panel and crank-out bottom window panel
- 18 fixed windows, with window panel on top and bottom
- Windows and locations determined by Owner
- Approved window manufacturers: Manko Window Systems (Manhattan, KS) or equivalent (as approved by Owner)
    - Manko 3527 AW80 series with crank outs
    - Manko 3527 AW80 series non movable
- Dimensions and other minimum specifications below
- Contractor responsible for disposal of old windows

Elevation: A1
Qty: 12
Series: 3527i AW80
Finish: Anodized
Color: Dark Bronze Class 1
Stacked: Horizontal
Dim Ref: Rough Opening
Width: 58"
Height: 82"
Screens: 2
Hinge: Butt
Limit Device No Limit Device
Locking: Roto Operator
Perimeter Surrounds:
Receptor: H(8140-24/841)
J(8140-24/841)
Sill Starter:16402-26

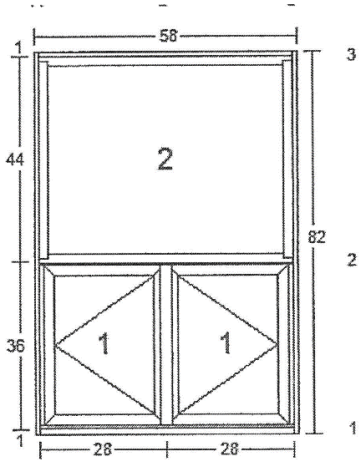

Elevation: A2
Qty: 18
Series: 3527i AW80
Finish: Anodized
Color: Dark Bronze Class 1
Stacked: Horizontal
Dim Ref: Rough Opening
Width: 58"
Height: 82"
Perimeter Surrounds:
Receptor: H(8140-24/841)
J(8140-24/841)
Sill Starter:16402-26

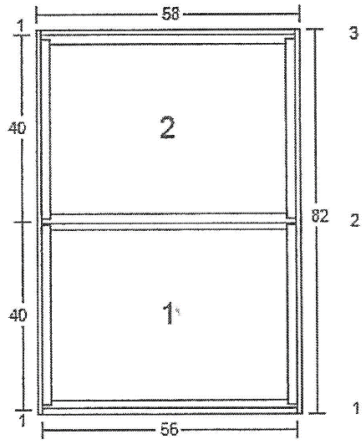

Glazing ID: 1
1" Insulated Glass (T/T)
3/16" Clear (TP)
5/8" Tri-Seal Black Air Spacer
3/16" Soft Coat Low-E Clear MC37 LE-T(TP) # 3
Surface
DSE + PIB Sealant

Glazing ID: 2
AP, 1, Std. Pt. Stucco EXTRA DARK BRONZE

(a) **Davis Bacon Act.** The Agreement is subject to the federal Davis-Bacon Act and implementing regulations, including 29 C.F.R. § 5.1 et seq., all as may be amended from time to time. The follow clauses, terms and conditions in this subsection (a) are expressly incorporated into the Agreement. The Contractor is responsible for compliance with all aspects of the following incorporated terms. To the extent the regulations call for Owner performances, the duties shall be carried out by the Contractor, either in consultation with the Owner or with notice to the Owner.

(1) Minimum wages.

(i) All laborers and mechanics employed or working upon the site of the work (or under the United States Housing Act of 1937 or under the Housing Act of 1949 in the construction or development of the project), will be paid unconditionally and not less often than once a week, and without subsequent deduction or rebate on any account (except such payroll deductions as are permitted by regulations issued by the Secretary of Labor under the Copeland Act (29 CFR part 3)), the full amount of wages and bona fide fringe benefits (or cash equivalents thereof) due at time of payment computed at rates not less than those contained in the wage determination of the Secretary of Labor, which is attached hereto as Exhibit 1 and made a part hereof, regardless of any contractual relationship which may be alleged to exist between the contractor and such laborers and mechanics. Exhibit 1 is effective as of the date of the Agreement and may be updated from time to time by the U.S. Department of Labor. Contractor and all subcontractors shall comply with the latest version of Exhibit 1. Contributions made or costs reasonably anticipated for bona fide fringe benefits under section 1(b)(2) of the Davis-Bacon Act on behalf of laborers or mechanics are considered wages paid to such laborers or mechanics, subject to the provisions of paragraph (a)(1)(iv) of this section; also, regular contributions made or costs incurred for more than a weekly period (but not less often than quarterly) under plans, funds, or programs which cover the particular weekly period, are deemed to be constructively made or incurred during such weekly period. Such laborers and mechanics shall be paid the appropriate wage rate and fringe benefits on the wage determination for the classification of work actually performed, without regard to skill, except as provided in 29 C.F.R. § 5.5(a)(4). Laborers or mechanics performing work in more than one classification may be compensated at the rate specified for each classification for the time actually worked therein: Provided, That the employer's payroll records accurately set forth the time spent in each classification in which work is performed. The wage determination (including any additional classification and wage rates conformed under paragraph (a)(1)(ii) of this section) and the Davis-Bacon poster (WH-1321, attached as Exhibit 2) shall be posted at all times by the contractor and its subcontractors at the site of the work in a prominent and accessible place where it can be easily seen by the workers.

(ii)

(A) The Contractor, in consultation with and notice to the Owner, shall require that any class of laborers or mechanics, including helpers, which is not listed in the wage determination and which is to be employed under the

contract shall be classified in conformance with the wage determination. The Contractor, in consultation with and notice to the Owner, shall approve an additional classification and wage rate and fringe benefits therefore only when the following criteria have been met:

(1) The work to be performed by the classification requested is not performed by a classification in the wage determination; and

(2) The classification is utilized in the area by the construction industry; and

(3) The proposed wage rate, including any bona fide fringe benefits, bears a reasonable relationship to the wage rates contained in the wage determination.

(B) If the contractor and the laborers and mechanics to be employed in the classification (if known), or their representatives, and the Owner agree on the classification and wage rate (including the amount designated for fringe benefits where appropriate), a report of the action taken shall be sent by the Contractor on behalf of the Owner to the Administrator of the Wage and Hour Division, U.S. Department of Labor, Washington, DC 20210. The Administrator, or an authorized representative, will approve, modify, or disapprove every additional classification action within 30 days of receipt and so advise the Owner or will notify the Owner within the 30-day period that additional time is necessary.

(C) In the event the contractor, the laborers or mechanics to be employed in the classification or their representatives, and the Owner do not agree on the proposed classification and wage rate (including the amount designated for fringe benefits, where appropriate), the Contractor, on behalf of the Owner, shall refer the questions, including the views of all interested parties and the recommendation of the Owner, to the Administrator for determination. The Administrator, or an authorized representative, will issue a determination within 30 days of receipt and so advise the Owner or will notify the Owner within the 30-day period that additional time is necessary.

(D) The wage rate (including fringe benefits where appropriate) determined pursuant to paragraphs (a)(1)(ii) (B) or (C) of this section, shall be paid to all workers performing work in the classification under this contract from the first day on which work is performed in the classification.

(iii) Whenever the minimum wage rate prescribed in the contract for a class of laborers or mechanics includes a fringe benefit which is not expressed as an hourly rate, the contractor shall either pay the benefit as stated in the wage determination or shall pay another bona fide fringe benefit or an hourly cash equivalent thereof.

(iv) If the contractor does not make payments to a trustee or other third person, the contractor may consider as part of the wages of any laborer or mechanic the amount of any costs reasonably anticipated in providing bona fide fringe benefits under a plan or program, Provided, That the Secretary of Labor has found, upon the written request of the contractor, that the applicable standards of the Davis-Bacon Act have been met. The Secretary of Labor may require the

contractor to set aside in a separate account assets for the meeting of obligations under the plan or program.

(2) Withholding. The Owner shall upon its own action or upon written request of an authorized representative of the U.S. Department of Labor withhold or cause to be withheld from the contractor under this contract or any other Federal contract with the same prime contractor, or any other federally-assisted contract subject to Davis-Bacon prevailing wage requirements, which is held by the same prime contractor, so much of the accrued payments or advances as may be considered necessary to pay laborers and mechanics, including apprentices, trainees, and helpers, employed by the contractor or any subcontractor the full amount of wages required by the contract. In the event of failure to pay any laborer or mechanic, including any apprentice, trainee, or helper, employed or working on the site of the work (or under the United States Housing Act of 1937 or under the Housing Act of 1949 in the construction or development of the project), all or part of the wages required by the contract, the Owner may, after written notice to the contractor, sponsor, applicant, or owner, take such action as may be necessary to cause the suspension of any further payment, advance, or guarantee of funds until such violations have ceased.

(3) Payrolls and basic records.

(i) Payrolls and basic records relating thereto shall be maintained by the contractor during the course of the work and preserved for a period of three years thereafter for all laborers and mechanics working at the site of the work (or under the United States Housing Act of 1937, or under the Housing Act of 1949, in the construction or development of the project). Such records shall contain the name, address, and social security number of each such worker, his or her correct classification, hourly rates of wages paid (including rates of contributions or costs anticipated for bona fide fringe benefits or cash equivalents thereof of the types described in section 1(b)(2)(B) of the Davis-Bacon Act), daily and weekly number of hours worked, deductions made and actual wages paid. Whenever the Secretary of Labor has found under 29 CFR 5.5(a)(1)(iv) that the wages of any laborer or mechanic include the amount of any costs reasonably anticipated in providing benefits under a plan or program described in section 1(b)(2)(B) of the Davis-Bacon Act, the contractor shall maintain records which show that the commitment to provide such benefits is enforceable, that the plan or program is financially responsible, and that the plan or program has been communicated in writing to the laborers or mechanics affected, and records which show the costs anticipated or the actual cost incurred in providing such benefits. Contractors employing apprentices or trainees under approved programs shall maintain written evidence of the registration of apprenticeship programs and certification of trainee programs, the registration of the apprentices and trainees, and the ratios and wage rates prescribed in the applicable programs.

(ii)

(A) The contractor shall submit weekly for each week in which any contract work is performed a copy of all payrolls to the Owner, for transmission,

when requested, to the appropriate federal and/or state agency. The payrolls submitted shall set out accurately and completely all of the information required to be maintained under 29 CFR 5.5(a)(3)(i), except that full social security numbers and home addresses shall not be included on weekly transmittals. Instead the payrolls shall only need to include an individually identifying number for each employee (e.g., the last four digits of the employee's social security number). The required weekly payroll information may be submitted in any form desired. Optional Form WH-347 is available for this purpose from the Wage and Hour Division Web site at http://www.dol.gov/esa/whd/forms/wh347instr.htm or its successor site, and is attached as Exhibit 3. The prime contractor is responsible for the submission of copies of payrolls by all subcontractors. Contractors and subcontractors shall maintain the full social security number and current address of each covered worker, and shall provide them upon request to the Owner for transmission, when requested, to the appropriate federal and/or state agency, the contractor, or the Wage and Hour Division of the U.S. Department of Labor for purposes of an investigation or audit of compliance with prevailing wage requirements. It is not a violation of this section for a prime contractor to require a subcontractor to provide addresses and social security numbers to the prime contractor for its own records, without weekly submission to the sponsoring government agency (or the applicant, sponsor, or owner).

(B) Each payroll submitted shall be accompanied by a "Statement of Compliance," signed by the contractor or subcontractor or his or her agent who pays or supervises the payment of the persons employed under the contract and shall certify the following:

(1) That the payroll for the payroll period contains the information required to be provided under § 5.5 (a)(3)(ii) of Regulations, 29 CFR part 5, the appropriate information is being maintained under § 5.5 (a)(3)(i) of Regulations, 29 CFR part 5, and that such information is correct and complete;

(2) That each laborer or mechanic (including each helper, apprentice, and trainee) employed on the contract during the payroll period has been paid the full weekly wages earned, without rebate, either directly or indirectly, and that no deductions have been made either directly or indirectly from the full wages earned, other than permissible deductions as set forth in Regulations, 29 CFR part 3;

(3) That each laborer or mechanic has been paid not less than the applicable wage rates and fringe benefits or cash equivalents for the classification of work performed, as specified in the applicable wage determination incorporated into the contract.

(C) The weekly submission of a properly executed certification set forth on the reverse side of Optional Form WH-347 shall satisfy the requirement for submission of the "Statement of Compliance" required by paragraph (a)(3)(ii)(B) of this section.

(D) The falsification of any of the above certifications may subject the contractor or subcontractor to civil or criminal prosecution under section 1001 of title 18 and section 231 of title 31 of the United States Code.

(iii) The contractor or subcontractor shall make the records required under paragraph (a)(3)(i) of this section available for inspection, copying, or transcription by authorized representatives of the Owner or the U.S. Department of Labor, and shall permit such representatives to interview employees during working hours on the job. If the contractor or subcontractor fails to submit the required records or to make them available, the Federal agency may, after written notice to the contractor, sponsor, applicant, or owner, take such action as may be necessary to cause the suspension of any further payment, advance, or guarantee of funds. Furthermore, failure to submit the required records upon request or to make such records available may be grounds for debarment action pursuant to 29 CFR 5.12.

(4) Apprentices and trainees —

(i) Apprentices. Apprentices will be permitted to work at less than the predetermined rate for the work they performed when they are employed pursuant to and individually registered in a bona fide apprenticeship program registered with the U.S. Department of Labor, Employment and Training Administration, Office of Apprenticeship Training, Employer and Labor Services or with a State Apprenticeship Agency recognized by the Office, or if a person is employed in his or her first 90 days of probationary employment as an apprentice in such an apprenticeship program, who is not individually registered in the program, but who has been certified by the Office of Apprenticeship Training, Employer and Labor Services or a State Apprenticeship Agency (where appropriate) to be eligible for probationary employment as an apprentice. The allowable ratio of apprentices to journeymen on the job site in any craft classification shall not be greater than the ratio permitted to the contractor as to the entire work force under the registered program. Any worker listed on a payroll at an apprentice wage rate, who is not registered or otherwise employed as stated above, shall be paid not less than the applicable wage rate on the wage determination for the classification of work actually performed. In addition, any apprentice performing work on the job site in excess of the ratio permitted under the registered program shall be paid not less than the applicable wage rate on the wage determination for the work actually performed. Where a contractor is performing construction on a project in a locality other than that in which its program is registered, the ratios and wage rates (expressed in percentages of the journeyman's hourly rate) specified in the contractor's or subcontractor's registered program shall be observed. Every apprentice must be paid at not less than the rate specified in the registered program for the apprentice's level of progress, expressed as a percentage of the journeymen hourly rate specified in the applicable wage determination. Apprentices shall be paid fringe benefits in accordance with the provisions of the apprenticeship program. If the apprenticeship program does not specify fringe benefits, apprentices must be paid the full amount of fringe benefits listed on the wage

determination for the applicable classification. If the Administrator determines that a different practice prevails for the applicable apprentice classification, fringes shall be paid in accordance with that determination. In the event the Office of Apprenticeship Training, Employer and Labor Services, or a State Apprenticeship Agency recognized by the Office, withdraws approval of an apprenticeship program, the contractor will no longer be permitted to utilize apprentices at less than the applicable predetermined rate for the work performed until an acceptable program is approved.

(ii) **Trainees.** Except as provided in 29 CFR 5.16, trainees will not be permitted to work at less than the predetermined rate for the work performed unless they are employed pursuant to and individually registered in a program which has received prior approval, evidenced by formal certification by the U.S. Department of Labor, Employment and Training Administration. The ratio of trainees to journeymen on the job site shall not be greater than permitted under the plan approved by the Employment and Training Administration. Every trainee must be paid at not less than the rate specified in the approved program for the trainee's level of progress, expressed as a percentage of the journeyman hourly rate specified in the applicable wage determination. Trainees shall be paid fringe benefits in accordance with the provisions of the trainee program. If the trainee program does not mention fringe benefits, trainees shall be paid the full amount of fringe benefits listed on the wage determination unless the Administrator of the Wage and Hour Division determines that there is an apprenticeship program associated with the corresponding journeyman wage rate on the wage determination which provides for less than full fringe benefits for apprentices. Any employee listed on the payroll at a trainee rate who is not registered and participating in a training plan approved by the Employment and Training Administration shall be paid not less than the applicable wage rate on the wage determination for the classification of work actually performed. In addition, any trainee performing work on the job site in excess of the ratio permitted under the registered program shall be paid not less than the applicable wage rate on the wage determination for the work actually performed. In the event the Employment and Training Administration withdraws approval of a training program, the contractor will no longer be permitted to utilize trainees at less than the applicable predetermined rate for the work performed until an acceptable program is approved.

(iii) **Equal employment opportunity.** The utilization of apprentices, trainees and journeymen under this part shall be in conformity with the equal employment opportunity requirements of Executive Order 11246, as amended, and 29 CFR part 30.

(5) **Compliance with Copeland Act requirements.** The contractor shall comply with the requirements of 29 CFR part 3, which are incorporated by reference in this contract.

(6) **Subcontracts.** The contractor or subcontractor shall insert in any subcontracts the clauses contained in 29 CFR 5.5(a)(1) through (10) and such other clauses as the

appropriate state agency or Federal agency may by appropriate instructions require, and also a clause requiring the subcontractors to include these clauses in any lower tier subcontracts. The prime contractor shall be responsible for the compliance by any subcontractor or lower tier subcontractor with all the contract clauses in 29 CFR 5.5.

(7) Contract termination: debarment. A breach of the contract clauses in 29 CFR 5.5 may be grounds for termination of the contract, and for debarment as a contractor and a subcontractor as provided in 29 CFR 5.12.

(8) Compliance with Davis-Bacon and Related Act requirements. All rulings and interpretations of the Davis-Bacon and Related Acts contained in 29 CFR parts 1, 3, and 5 are herein incorporated by reference in this contract.

(9) Disputes concerning labor standards. Disputes arising out of the labor standards provisions of this contract shall not be subject to the general disputes clause of this contract. Such disputes shall be resolved in accordance with the procedures of the U.S. Department of Labor set forth in 29 CFR parts 5, 6, and 7. Disputes within the meaning of this clause include disputes between the contractor (or any of its subcontractors) and the Owner, the U.S. Department of Labor, or the employees or their representatives.

(10) Certification of eligibility.

(i) By entering into this contract, the contractor certifies that neither it (nor he or she) nor any person or firm who has an interest in the contractor's firm is a person or firm ineligible to be awarded Government contracts by virtue of section 3(a) of the Davis-Bacon Act or 29 CFR 5.12(a)(1).

(ii) No part of this contract shall be subcontracted to any person or firm ineligible for award of a Government contract by virtue of section 3(a) of the Davis-Bacon Act or 29 CFR 5.12(a)(1).

(iii) The penalty for making false statements is prescribed in the U.S. Criminal Code, 18 U.S.C. 1001.

(b) **Contract Work Hours and Safety Standards Act.** The Agreement is subject to the federal Contract Work Hours and Safety Standards Act when the amount of the Agreement is more than $100,000.00. When applicable, the follow clauses, terms and conditions in this subsection (b) are expressly incorporated into the Agreement. The Contractor is responsible for compliance with all aspects of the following incorporated terms. To the extent the regulations call for Owner performances, the duties shall be carried out by the Contractor, either in consultation with the Owner or with notice to the Owner.

(1) Overtime requirements. No contractor or subcontractor contracting for any part of the contract work which may require or involve the employment of laborers or mechanics shall require or permit any such laborer or mechanic in any workweek in which he or she is employed on such work to work in excess of forty hours in such workweek unless such laborer or mechanic receives compensation at a rate not less

than one and one-half times the basic rate of pay for all hours worked in excess of forty hours in such workweek.

(2) Violation; liability for unpaid wages; liquidated damages. In the event of any violation of the clause set forth in paragraph (b)(1) of this section the contractor and any subcontractor responsible therefor shall be liable for the unpaid wages. In addition, such contractor and subcontractor shall be liable to the United States (in the case of work done under contract for the District of Columbia or a territory, to such District or to such territory), for liquidated damages. Such liquidated damages shall be computed with respect to each individual laborer or mechanic, including watchmen and guards, employed in violation of the clause set forth in paragraph (b)(1) of this section, in the sum of $ 27 for each calendar day on which such individual was required or permitted to work in excess of the standard workweek of forty hours without payment of the overtime wages required by the clause set forth in paragraph (b)(1) of this section.

(3) Withholding for unpaid wages and liquidated damages. The Owner shall upon its own action or upon written request of an authorized representative of the U.S. Department of Labor withhold or cause to be withheld, from any moneys payable on account of work performed by the contractor or subcontractor under any such contract or any other Federal contract with the same prime contractor, or any other federally-assisted contract subject to the Contract Work Hours and Safety Standards Act, which is held by the same prime contractor, such sums as may be determined to be necessary to satisfy any liabilities of such contractor or subcontractor for unpaid wages and liquidated damages as provided in the clause set forth in paragraph (b)(2) of this section.

(4) Subcontracts. The contractor or subcontractor shall insert in any subcontracts the clauses set forth in paragraph (b)(1) through (4) of this section and also a clause requiring the subcontractors to include these clauses in any lower tier subcontracts. The prime contractor shall be responsible for compliance by any subcontractor or lower tier subcontractor with the clauses set forth in paragraphs (b)(1) through (4) of this section.

"General Decision Number: NE20210078 04/23/2021

Superseded General Decision Number: NE20200078

State: Nebraska

Construction Type: Building

Counties: Antelope, Boyd, Brown, Burt, Cedar, Colfax, Cuming, Dodge, Holt, Keya Paha, Rock, Stanton and Wayne Counties in Nebraska.

BUILDING CONSTRUCTION PROJECTS (does not include single family homes or apartments up to and including 4 stories).

Note: Under Executive Order (EO) 13658, an hourly minimum wage of $10.95 for calendar year 2021 applies to all contracts subject to the Davis-Bacon Act for which the contract is awarded (and any solicitation was issued) on or after January 1, 2015. If this contract is covered by the EO, the contractor must pay all workers in any classification listed on this wage determination at least $10.95 per hour (or the applicable wage rate listed on this wage determination, if it is higher) for all hours spent performing on the contract in calendar year 2021. If this contract is covered by the EO and a classification considered necessary for performance of work on the contract does not appear on this wage determination, the contractor must pay workers in that classification at least the wage rate determined through the conformance process set forth in 29 CFR 5.5(a)(1)(ii) (or the EO minimum wage rate,if it is higher than the conformed wage rate). The EO minimum wage rate will be adjusted annually. Please note that this EO applies to the above-mentioned types of contracts entered into by the federal government that are subject to the Davis-Bacon Act itself, but it does not apply to contracts subject only to the Davis-Bacon Related Acts, including those set forth at 29 CFR 5.1(a)(2)-(60). Additional information on contractor requirements and worker protections under the EO is available at www.dol.gov/whd/govcontracts.

Modification Number	Publication Date
0	01/01/2021
1	01/22/2021
2	04/23/2021

BOIL0083-002 01/01/2017

	Rates	Fringes
BOILERMAKER	$ 36.56	28.11

BRNE0001-006 06/04/2018

BURT, CEDAR, COLFAX, CUMING, DODGE, STANTON, AND WAYNE COUNTIES

	Rates	Fringes
BRICKLAYER	$ 28.95	16.07

BRNE0001-007 06/01/2014

ANTELOPE, BOYD, BROWN, HOLT AND KEYA PAHA COUNTIES

	Rates	Fringes
BRICKLAYER	$ 23.99	12.66

CARP0427-007 06/01/2020

ANTELOPE, BURT, COLFAX, CUMING, DODGE, STANTON AND WAYNE COUNTIES

	Rates	Fringes
CARPENTER (Drywall Hanging Only)	$ 27.61	14.77

ELEC0022-002 06/01/2020

BURT, COLFAX, CUMING, DODGE AND STANTON COUNTIES

	Rates	Fringes
ELECTRICIAN	$ 38.50	16.62

ELEC0231-009 06/04/2020

CEDAR AND WAYNE COUNTIES

	Rates	Fringes
ELECTRICIAN	$ 34.73	11.42+4%

ELEC0265-004 08/31/2020

ANTELOPE, BOYD, BROWN, HOLT, KEYA PAHA AND ROCK COUNTIES

	Rates	Fringes
ELECTRICIAN		
Zone 1	$ 29.12	14.26
Zone 2	$ 29.42	14.28
Zone 3	$ 29.72	14.32
Zone 4	$ 30.12	14.35

ZONE DEFINITIONS:
Zone 1: 0 to 35 miles from the main Post Office in Lincoln
Zone 2: 36 to 50 miles from the main Post Office in Lincoln
Zone 3: 51 to 75 miles from the main Post Office in Lincoln
Zone 4: 76 miles and over from the main Post Office in Lincoln

ELEV0028-001 01/01/2021

	Rates	Fringes
ELEVATOR MECHANIC	$ 47.48	35.825+a+b

FOOTNOTE:
a. Vacation Pay: 8% for persons with 5 or more years of service, 6% for persons with less than 5 years of service.
b. Paid Holidays: New Year's Day, Memorial Day, Independence Day, Labor Day, Veterans' Day, Thanksgiving Day, Friday after Thanksgiving, and Christmas Day.

IRON0021-010 06/01/2020

BURT, COLFAX AND DODGE COUNTIES

	Rates	Fringes
IRONWORKER, STRUCTURAL	$ 31.75	18.03

IRON0021-011 05/01/2020

ANTELOPE, BOYD, BROWN, CEDAR, CUMING, HOLT, KEYA PAHA, ROCK, STANTON AND WAYNE COUNTIES

	Rates	Fringes
IRONWORKER, STRUCTURAL	$ 26.08	16.18

LABO1140-010 06/01/2016

	Rates	Fringes
LABORER (Mason Tender, Brick & Hod)	$ 20.63	9.40

PLUM0016-003 05/17/2020

	Rates	Fringes
PLUMBER (Excluding HVAC Pipe Installation)	$ 38.55	13.81

PLUM0464-019 05/31/2020

	Rates	Fringes
PIPEFITTER (Includes HVAC Pipe Installation)	$ 38.50	18.36

---

* SFNE0669-001 04/01/2021

	Rates	Fringes
SPRINKLER FITTER (Fire Sprinklers)	$ 38.06	23.45

SHEE0003-020 07/01/2015

BROWN, BURT, COLFAX, CUMING, DODGE, KEYA PAHA, ROCK AND STANTON COUNTIES

	Rates	Fringes
SHEET METAL WORKER (Includes HVAC Duct Installation)	$ 32.89	14.93

SHEE0003-021 05/01/2012

ANTELOPE, BOYD, CEDAR, HOLT AND WAYNE COUNTIES

	Rates	Fringes
SHEET METAL WORKER (Includes		

HVAC Duct Installation).....$ 22.41 10.29

SUNE2012-015 04/19/2012

	Rates	Fringes
CARPENTER, Excludes Drywall Finishing/Taping, and Drywall Hanging	$ 17.39	3.13
CEMENT MASON/CONCRETE FINISHER	$ 17.80	1.34
DRYWALL FINISHER/TAPER	$ 13.79	3.32
LABORER: Common or General	$ 12.07	2.85
OPERATOR: Backhoe/Excavator/Trackhoe	$ 21.82	2.22
OPERATOR: Loader	$ 16.58	0.94
ROOFER	$ 14.52	0.65
TRUCK DRIVER: Dump, Lowboy and Tandem	$ 14.56	1.68

WELDERS - Receive rate prescribed for craft performing operation to which welding is incidental.

==========

Note: Executive Order (EO) 13706, Establishing Paid Sick Leave for Federal Contractors applies to all contracts subject to the Davis-Bacon Act for which the contract is awarded (and any solicitation was issued) on or after January 1, 2017. If this contract is covered by the EO, the contractor must provide employees with 1 hour of paid sick leave for every 30 hours they work, up to 56 hours of paid sick leave each year. Employees must be permitted to use paid sick leave for their own illness, injury or other health-related needs, including preventive care; to assist a family member (or person who is like family to the employee) who is ill, injured, or has other health-related needs, including preventive care; or for reasons resulting from, or to assist a family member (or person who is like family to the employee) who is a victim of, domestic violence, sexual assault, or stalking. Additional information on contractor requirements and worker protections under the EO is available at www.dol.gov/whd/govcontracts.

Unlisted classifications needed for work not included within the scope of the classifications listed may be added after award only as provided in the labor standards contract clauses (29CFR 5.5 (a) (1) (ii)).

The body of each wage determination lists the classification and wage rates that have been found to be prevailing for the cited type(s) of construction in the area covered by the wage determination. The classifications are listed in alphabetical order of ""identifiers"" that indicate whether the particular rate is a union rate (current union negotiated rate for local),

a survey rate (weighted average rate) or a union average rate (weighted union average rate).

Union Rate Identifiers

A four letter classification abbreviation identifier enclosed in dotted lines beginning with characters other than ""SU"" or ""UAVG"" denotes that the union classification and rate were prevailing for that classification in the survey. Example: PLUM0198-005 07/01/2014. PLUM is an abbreviation identifier of the union which prevailed in the survey for this classification, which in this example would be Plumbers. 0198 indicates the local union number or district council number where applicable, i.e., Plumbers Local 0198. The next number, 005 in the example, is an internal number used in processing the wage determination. 07/01/2014 is the effective date of the most current negotiated rate, which in this example is July 1, 2014.

Union prevailing wage rates are updated to reflect all rate changes in the collective bargaining agreement (CBA) governing this classification and rate.

Survey Rate Identifiers

Classifications listed under the ""SU"" identifier indicate that no one rate prevailed for this classification in the survey and the published rate is derived by computing a weighted average rate based on all the rates reported in the survey for that classification. As this weighted average rate includes all rates reported in the survey, it may include both union and non-union rates. Example: SULA2012-007 5/13/2014. SU indicates the rates are survey rates based on a weighted average calculation of rates and are not majority rates. LA indicates the State of Louisiana. 2012 is the year of survey on which these classifications and rates are based. The next number, 007 in the example, is an internal number used in producing the wage determination. 5/13/2014 indicates the survey completion date for the classifications and rates under that identifier.

Survey wage rates are not updated and remain in effect until a new survey is conducted.

Union Average Rate Identifiers

Classification(s) listed under the UAVG identifier indicate that no single majority rate prevailed for those classifications; however, 100% of the data reported for the classifications was union data. EXAMPLE: UAVG-OH-0010 08/29/2014. UAVG indicates that the rate is a weighted union average rate. OH indicates the state. The next number, 0010 in the example, is an internal number used in producing the wage determination. 08/29/2014 indicates the survey completion date for the classifications and rates under that identifier.

A UAVG rate will be updated once a year, usually in January of each year, to reflect a weighted average of the current negotiated/CBA rate of the union locals from which the rate is based.

WAGE DETERMINATION APPEALS PROCESS

1.) Has there been an initial decision in the matter? This can be:

* an existing published wage determination
* a survey underlying a wage determination
* a Wage and Hour Division letter setting forth a position on a wage determination matter
* a conformance (additional classification and rate) ruling

On survey related matters, initial contact, including requests for summaries of surveys, should be with the Wage and Hour Regional Office for the area in which the survey was conducted because those Regional Offices have responsibility for the Davis-Bacon survey program. If the response from this initial contact is not satisfactory, then the process described in 2.) and 3.) should be followed.

With regard to any other matter not yet ripe for the formal process described here, initial contact should be with the Branch of Construction Wage Determinations. Write to:

Branch of Construction Wage Determinations
Wage and Hour Division
U.S. Department of Labor
200 Constitution Avenue, N.W.
Washington, DC 20210

2.) If the answer to the question in 1.) is yes, then an interested party (those affected by the action) can request review and reconsideration from the Wage and Hour Administrator (See 29 CFR Part 1.8 and 29 CFR Part 7). Write to:

Wage and Hour Administrator
U.S. Department of Labor
200 Constitution Avenue, N.W.
Washington, DC 20210

The request should be accompanied by a full statement of the interested party's position and by any information (wage payment data, project description, area practice material, etc.) that the requestor considers relevant to the issue.

3.) If the decision of the Administrator is not favorable, an interested party may appeal directly to the Administrative Review Board (formerly the Wage Appeals Board). Write to:

Administrative Review Board
U.S. Department of Labor
200 Constitution Avenue, N.W.
Washington, DC 20210

4.) All decisions by the Administrative Review Board are final.

==========

END OF GENERAL DECISION"

Appendix F
Davis Bacon Act – Additional Contract Provisions

Exhibit 2
Davis-Bacon poster (WH-1321)

EMPLOYEE RIGHTS
UNDER THE DAVIS-BACON ACT

FOR LABORERS AND MECHANICS EMPLOYED ON FEDERAL OR FEDERALLY ASSISTED CONSTRUCTION PROJECTS

PREVAILING WAGES

You must be paid not less than the wage rate listed in the Davis-Bacon Wage Decision posted with this Notice for the work you perform.

OVERTIME

You must be paid not less than one and one-half times your basic rate of pay for all hours worked over 40 in a work week. There are few exceptions.

ENFORCEMENT

Contract payments can be withheld to ensure workers receive wages and overtime pay due, and liquidated damages may apply if overtime pay requirements are not met. Davis-Bacon contract clauses allow contract termination and debarment of contractors from future federal contracts for up to three years. A contractor who falsifies certified payroll records or induces wage kickbacks may be subject to civil or criminal prosecution, fines and/or imprisonment.

APPRENTICES

Apprentice rates apply only to apprentices properly registered under approved Federal or State apprenticeship programs.

PROPER PAY

If you do not receive proper pay, or require further information on the applicable wages, contact the Contracting Officer listed below:

or contact the U.S. Department of Labor's Wage and Hour Division.

WAGE AND HOUR DIVISION
UNITED STATES DEPARTMENT OF LABOR

1-866-487-9243
TTY: 1-877-889-5627
www.dol.gov/whd

WH1321 REV 10/17

Exhibit 3
Optional Form WH-347
(Page 1 of 2)

U.S. Department of Labor
Wage and Hour Division

PAYROLL

(For Contractor's Optional Use; See Instructions at www.dol.gov/whd/forms/wh347instr.htm)

Persons are not required to respond to the collection of information unless it displays a currently valid OMB control number.

U.S. Wage and Hour Division
Rev. Dec. 2008

OMB No.: 1235-0008
Expires: 04/30/2021

NAME OF CONTRACTOR ☐ OR SUBCONTRACTOR ☐ | ADDRESS

PAYROLL NO. | FOR WEEK ENDING | PROJECT AND LOCATION | PROJECT OR CONTRACT NO.

(1) NAME AND INDIVIDUAL IDENTIFYING NUMBER (e.g., LAST FOUR DIGITS OF SOCIAL SECURITY NUMBER) OF WORKER	(2) NO. OF WITHHOLDING EXEMPTIONS	(3) WORK CLASSIFICATION	O. OR ST.	(4) DAY AND DATE HOURS WORKED EACH DAY	(5) TOTAL HOURS	(6) RATE OF PAY	(7) GROSS AMOUNT EARNED	(8) DEDUCTIONS FICA	WITH-HOLDING TAX		OTHER	TOTAL DEDUCTIONS	(9) NET WAGES PAID FOR WEEK
			O										
			S										
			O										
			S										
			O										
			S										
			O										
			S										
			O										
			S										
			O										
			S										
			O										
			S										
			O										
			S										

While completion of Form WH-347 is optional, it is mandatory for covered contractors and subcontractors performing work on Federally financed or assisted construction contracts to respond to the information collection contained in 29 C.F.R. §§ 3.3, 5.5(a). The Copeland Act (40 U.S.C. § 3145) contractors and subcontractors performing work on Federally financed or assisted construction contracts to "furnish weekly a statement with respect to the wages paid each employee during the 'preceding week." U.S. Department of Labor (DOL) regulations at 29 C.F.R. § 5.5(a)(3)(ii) require contractors to submit weekly a copy of all payrolls to the Federal agency contracting for or financing the construction project, accompanied by a signed "Statement of Compliance' indicating that the payrolls are correct and complete and that each laborer or mechanic has been paid not less than the proper Davis-Bacon prevailing wage rate for the work performed. DOL and federal contracting agencies receiving this information review the information to determine that employees have received legally required wages and fringe benefits.

Public Burden Statement

We estimate that is will take an average of 55 minutes to complete this collection, including time for reviewing instructions, searching existing data sources, gathering and maintaining the data needed, and completing and reviewing the collection of information. If you have any comments regarding these estimates or any other aspect of this collection, including suggestions for reducing this burden, send them to the Administrator, Wage and Hour Division, U.S. Department of Labor, Room S3502, 200 Constitution Avenue, N.W. Washington, D.C. 20210

(over)

Exhibit 3
Optional Form WH-347
(Page 2 of 2)

Date _____

I, _____ _____
(Name of Signatory Party) (Title)

do hereby state:

(1) That I pay or supervise the payment of the persons employed by

_____ on the
(Contractor or Subcontractor)

_____; that during the payroll period commencing on the
(Building or Work)

_____ day of _____, _____, and ending the _____ day of _____, _____,

all persons employed on said project have been paid the full weekly wages earned, that no rebates have been or will be made either directly or indirectly to or on behalf of said

_____ from the full
(Contractor or Subcontractor)

weekly wages earned by any person and that no deductions have been made either directly or indirectly from the full wages earned by any person, other than permissible deductions as defined in Regulations, Part 3 (29 C.F.R. Subtitle A), issued by the Secretary of Labor under the Copeland Act, as amended (48 Stat. 948, 63 Stat. 108, 72 Stat. 967; 76 Stat. 357; 40 U.S.C. § 3145), and described below:

_____

_____

_____

_____

(2) That any payrolls otherwise under this contract required to be submitted for the above period are correct and complete; that the wage rates for laborers or mechanics contained therein are not less than the applicable wage rates contained in any wage determination incorporated into the contract; that the classifications set forth therein for each laborer or mechanic conform with the work he performed.

(3) That any apprentices employed in the above period are duly registered in a bona fide apprenticeship program registered with a State apprenticeship agency recognized by the Bureau of Apprenticeship and Training, United States Department of Labor, or if no such recognized agency exists in a State, are registered with the Bureau of Apprenticeship and Training, United States Department of Labor.

(4) That:

(a) WHERE FRINGE BENEFITS ARE PAID TO APPROVED PLANS, FUNDS, OR PROGRAMS

☐ – in addition to the basic hourly wage rates paid to each laborer or mechanic listed in the above referenced payroll, payments of fringe benefits as listed in the contract have been or will be made to appropriate programs for the benefit of such employees, except as noted in section 4(c) below.

(b) WHERE FRINGE BENEFITS ARE PAID IN CASH

☐ – Each laborer or mechanic listed in the above referenced payroll has been paid, as indicated on the payroll, an amount not less than the sum of the applicable basic hourly wage rate plus the amount of the required fringe benefits as listed in the contract, except as noted in section 4(c) below.

(c) EXCEPTIONS

EXCEPTION (CRAFT)	EXPLANATION

REMARKS:

NAME AND TITLE	SIGNATURE

THE WILLFUL FALSIFICATION OF ANY OF THE ABOVE STATEMENTS MAY SUBJECT THE CONTRACTOR OR SUBCONTRACTOR TO CIVIL OR CRIMINAL PROSECUTION. SEE SECTION 1001 OF TITLE 18 AND SECTION 231 OF TITLE 31 OF THE UNITED STATES CODE.

Additions and Deletions Report for
AIA® Document A104™ – 2017

This Additions and Deletions Report, as defined on page 1 of the associated document, reproduces below all text the author has added to the standard form AIA document in order to complete it, as well as any text the author may have added to or deleted from the original AIA text. Added text is shown underlined. Deleted text is indicated with a horizontal line through the original AIA text.

Note: This Additions and Deletions Report is provided for information purposes only and is not incorporated into or constitute any part of the associated AIA document. This Additions and Deletions Report and its associated document were generated simultaneously by AIA software at 12:42:22 ET on 07/09/2021.

PAGE 1

AGREEMENT made as of the 12th day of July in the year 2021

...

Colfax County School District 19-0123 a/k/a Schuyler Community Schools,
A political subdivision of the State of Nebraska
120 W 20th Street
Schuyler, NE 68661

...

Midwest Glass Service, Inc.
A Nebraska corporation
2512 12th Street
Columbus, NE 68601

...

Schuyler Community Schools – Window replacement project at Schuyler Central High School, located at 401 Adam Street, and at Schuyler Middle School, located at 200 West 10th Street, both in Schuyler, Nebraska; the project generally consisting of the removal and disposal of existing exterior windows and installation new exterior windows as identified by the Owner in the following quantities: twenty-three (23) windows at the high school facility and thirty (30) windows at the middle school facility, as more particularly described in the Specifications.

...

None. All references to "Architect" shall mean a reference to the "Owner."

PAGE 2

21 CLAIMS AND DISPUTES

~~**EXHIBIT A DETERMINATION OF THE COST OF THE WORK**~~

...

[**X**] A date set forth in a notice to proceed issued by the Owner. The notice to proceed shall not be issued by the Owner until the Agreement has been signed by the Contractor, approved by the Owner's Board of Education, signed by the Owner's authorized representative, and Owner has received all required payment and performance bonds and certificates of insurance as required under Article 17.

PAGE 3

[ ] By the following date: August 1, 2022

Additions and Deletions Report for AIA Document A104™ – 2017 (formerly A107™ – 2007). Copyright © 1936, 1951, 1958, 1961, 1963, 1966, 1970, 1974, 1978, 1987, 1997, 2007 and 2017 by The American Institute of Architects. All rights reserved. The "American Institute of Architects," "AIA," the AIA Logo, and "AIA Contract Documents" are registered trademarks and may not be used without permission. This document was produced by AIA software at 12:42:22 ET on 07/09/2021 under Order No.5191009158 which expires on 01/30/2022, is not for resale, is licensed for one-time use only, and may only be used in accordance with the AIA Contract Documents® Terms of Service. To report copyright violations, e-mail copyright@aia.org.
User Notes: (1517236076)

...

[**X**] Stipulated Sum, in accordance with Section 3.2 below

...

§ 3.2 The Stipulated Sum shall be One Hundred Twenty-Six Thousand, Five Hundred and No/100ths Dollars ($ 126,500.00), subject to additions and deductions as provided in the Contract Documents.

...

None

§ 3.2.2 Unit prices, if any: None

PAGE 4

§ 3.2.3 Allowances, if any, included in the stipulated sum: None

...

~~§ 3.3 Cost of the Work Plus Contractor's Fee~~**§ 3.2.4** Contractor acknowledges that the Stipulated Sum includes all requirements of the federal Davis Bacon Act.

~~**§ 3.3.1** The Cost of the Work is as defined in Exhibit A, Determination of the Cost of the Work.~~

~~**§ 3.3.2** The Contractor's Fee:~~

~~*(State a lump sum, percentage of Cost of the Work or other provision for determining the Contractor's Fee and the method of adjustment to the Fee for changes in the Work.)*~~

§ 3.3 [omit]

§ 3.4 ~~Cost of the Work Plus Contractor's Fee With a Guaranteed Maximum Price~~

~~**§ 3.4.1** The Cost of the Work is as defined in Exhibit A, Determination of the Cost of the Work.~~

~~**§ 3.4.2** The Contractor's Fee:~~

~~*(State a lump sum, percentage of Cost of the Work or other provision for determining the Contractor's Fee and the method of adjustment to the Fee for changes in the Work.)*~~

~~**§ 3.4.3 Guaranteed Maximum Price**~~

~~**§ 3.4.3.1** The sum of the Cost of the Work and the Contractor's Fee is guaranteed by the Contractor not to exceed ($), subject to additions and deductions by changes in the Work as provided in the Contract Documents. This maximum sum is referred to in the Contract Documents as the Guaranteed Maximum Price. Costs which would cause the Guaranteed Maximum Price to be exceeded shall be paid by the Contractor without reimbursement by the Owner.~~

~~*(Insert specific provisions if the Contractor is to participate in any savings.)*~~

~~**§ 3.4.3.2** The Guaranteed Maximum Price is based on the following alternates, if any, which are described in the Contract Documents and are hereby accepted by the Owner:~~

~~*(State the numbers or other identification of accepted alternates. If the bidding or proposal documents permit the Owner to accept other alternates subsequent to the execution of this Agreement, attach a schedule of such other alternates showing the amount for each and the date when that amount expires.)*~~

Additions and Deletions Report for AIA Document A104™ – 2017 (formerly A107™ – 2007). Copyright © 1936, 1951, 1958, 1961, 1963, 1966, 1970, 1974, 1978, 1987, 1997, 2007 and 2017 by The American Institute of Architects. All rights reserved. The "American Institute of Architects," "AIA," the AIA Logo, and "AIA Contract Documents" are registered trademarks and may not be used without permission. This document was produced by AIA software at 12:42:22 ET on 07/09/2021 under Order No.5191009158 which expires on 01/30/2022, is not for resale, is licensed for one-time use only, and may only be used in accordance with the AIA Contract Documents® Terms of Service. To report copyright violations, e-mail copyright@aia.org.
User Notes: (1517236076)

~~**§ 3.4.3.3** Unit Prices, if any:~~
~~*(Identify the item and state the unit price and the quantity limitations, if any, to which the unit price will be applicable.)*~~

~~Item~~	~~Units and Limitations~~	~~Price per Unit ($0.00)~~

~~**§ 3.4.3.4** Allowances, if any, included in the Guaranteed Maximum Price:~~
~~*(Identify each allowance.)*~~

~~Item~~	~~Price~~

~~**§ 3.4.3.5** Assumptions, if any, on which the Guaranteed Maximum Price is based:~~

~~**§ 3.4.3.6** To the extent that the Contract Documents are anticipated to require further development, the Guaranteed Maximum Price includes the costs attributable to such further development consistent with the Contract Documents and reasonably inferable therefrom. Such further development does not include changes in scope, systems, kinds and quality of materials, finishes or equipment, all of which, if required, shall be incorporated by Change Order.~~

~~**§ 3.4.3.7 The Owner shall authorize preparation of revisions to the Contract Documents that incorporate the agreed-upon assumptions contained in Section 3.4.3.5. The Owner shall promptly furnish such revised Contract Documents to the Contractor. The Contractor shall notify the Owner and Architect of any inconsistencies between the agreed-upon assumptions contained in Section 3.4.3.5 and the revised Contract Documents.**~~**[omit]**

...

§ 4.1.2 The period covered by each Application for Payment shall be one calendar month ending on the last day of the ~~month, or as follows:~~
month.

§ 4.1.3 Provided that an Application for Payment is received by the Architect not later than the 25th day of a month, the Owner shall make payment of the certified amount to the Contractor not later than the last day of the following month. If an Application for Payment is received by the Architect after the date fixed above, payment shall be made by the Owner not later than ~~( ) days after the Architect receives the Application for Payment.~~thirty (30) days after the review and action on the Application for Payment by the Owner's Board of Education at a regular meeting held pursuant to Neb. Rev. Stat. § 79-554. Notwithstanding the requirements of this section, to allow sufficient time for review and action on Applications for Payment by the Owner's Board of Education at a regular meeting held pursuant to Neb. Rev. Stat. § 79-554, the "receipt by the owner or the owner's representative of a payment request made pursuant to the contract" under Neb. Rev. Stat. § 45-1203 shall be deemed to occur at the regular meeting of the Owner's Board of Education immediately following the receipt of the Application for Payment by the Architect.

...

§ 4.1.4 ~~For~~ The amount of each progress payment made prior to Substantial Completion of the ~~Work, the Owner may withhold retainage from the payment otherwise due as follows:~~Work for amounts not in dispute shall be computed as follows:
~~(Insert a percentage or amount to be withheld as retainage from each Application for Payment and any terms for reduction of retainage during the course of the Work. The amount of retainage may be limited by governing law.)~~**§ 4.1.4.1** Progress payments shall be made on the basis of that portion of the Contract Sum properly allocable to completed Work as determined by multiplying the percentage completion of each portion of the Work by the share of the Contract Sum allocated to that portion of the Work in the schedule of values, less retainage as set forth in § 4.1.4.2.

Additions and Deletions Report for AIA Document A104™ – 2017 (formerly A107™ – 2007). Copyright © 1936, 1951, 1958, 1961, 1963, 1966, 1970, 1974, 1978, 1987, 1997, 2007 and 2017 by The American Institute of Architects. All rights reserved. The "American Institute of Architects," "AIA," the AIA Logo, and "AIA Contract Documents" are registered trademarks and may not be used without permission. This document was produced by AIA software at 12:42:22 ET on 07/09/2021 under Order No.5191009158 which expires on 01/30/2022, is not for resale, is licensed for one-time use only, and may only be used in accordance with the AIA Contract Documents® Terms of Service. To report copyright violations, e-mail copyright@aia.org.
User Notes: (1517236076)

§ 4.1.4.2 The retainage amount deducted from each progress payment shall be that portion of the Contract Sum properly allocable to Completed Work in the amount of ten percent (10%) of the Completed Work for the first fifty percent (50%) of the Contract Sum, and in the amount of not less than five percent (5%) of the Completed Work for the last fifty percent (50%) of the Contract Sum

PAGE 5

~~%~~ Pursuant to Neb. Rev. Stat. §45-1205, interest due under this section shall accrue until such amount is paid, beginning on the day following the payment due date at the rate of one percent per month or a pro rata fraction thereof on the unpaid balance. Interest is due under this section only after the person charged the interest has been notified of the provisions of this section by the Contractor.

...

.2 the Contractor has submitted ~~a final accounting for the Cost of the Work, where payment is on the basis of the Cost of the Work with or without a Guaranteed Maximum Price;~~ the following documents (a) AIA Document G707 consent of surety, if any, to final payment, (b) notarized subcontractor's liens release using AIA Document G706A; (c) receipts, releases and waivers of liens, claims, security interests or encumbrances arising out of the Contract, to the extent and in such form as may be designated by the Owner; (d) Department of Labor Division of Employment Form No. 16, Certificate of Contribution Status, from the State of Nebraska Department of Labor certifying that the Contractor and each of its Subcontractors have paid all contributions and interest due to and including the calendar quarter immediately preceding the date of Substantial Completion; (e) Contractor's warranties; (f) Maintenance and Instruction Manuals ; and (g) Record drawings and "as-built" drawings;; and

...

§ 4.2.2 The Owner's final payment to the Contractor shall be made no later than 30 days after the issuance of the Architect's final Certificate for ~~Payment, or as follows:~~Payment.

§ 4.3 PAYMENT CONTINGENT UPON AVAILABILITY OF APPROPRIATED FUNDS OR FUNDS APPROVED BY OWNER'S BOARD OF EDUCATION

Any other provisions of the Contract Documents to the contrary notwithstanding, it is expressly understood and agreed that the legal obligation of the Owner to pay the Contract Sum or any part thereof shall be contingent upon the availability of funds specifically approved by formal action of the Owner's Board of Education for the purpose of payment of the Contract Sum or any part thereof.

...

[**X**] Litigation in a court of competent jurisdiction

PAGE 6

§ 6.1.2 ~~AIA Document E203™–2013, Building Information Modeling and Digital Data Exhibit, dated as indicated below:~~

~~*(Insert the date of the E203–2013 incorporated into this Agreement.)*~~

[omit]

§ 6.1.3 The Supplementary and other Conditions of the Contract: See attached Appendix F

...

§ 6.1.4 The Specifications: See attached Appendix E

...

§ 6.1.5 The Drawings: Not applicable

Additions and Deletions Report for AIA Document A104™ – 2017 (formerly A107™ – 2007). Copyright © 1936, 1951, 1958, 1961, 1963, 1966, 1970, 1974, 1978, 1987, 1997, 2007 and 2017 by The American Institute of Architects. All rights reserved. The "American Institute of Architects," "AIA," the AIA Logo, and "AIA Contract Documents" are registered trademarks and may not be used without permission. This document was produced by AIA software at 12:42:22 ET on 07/09/2021 under Order No.5191009158 which expires on 01/30/2022, is not for resale, is licensed for one-time use only, and may only be used in accordance with the AIA Contract Documents® Terms of Service. To report copyright violations, e-mail copyright@aia.org.
User Notes: (1517236076)

...

§ 6.1.6 The Addenda, if any: None

...

~~[–] Exhibit A, Determination of the Cost of the Work.~~

~~[–] AIA Document E204™–2017, Sustainable Projects Exhibit, dated as indicated below:~~
~~*(Insert the date of the E204-2017 incorporated into this Agreement.)*~~

~~_____~~

~~[–] The Sustainability Plan:~~

~~Title~~	~~Date~~	~~Pages~~

~~[–] Supplementary and other Conditions of the Contract:~~

~~Document~~	~~Title~~	~~Date~~	~~Pages~~

.2 Other documents, if any, listed below:

...

Contractor's Payment and Performance Bond, Appendix A
Contractor's Certificate of Insurance, Appendix B
Job Site Security Protocol, Appendix C
Contractor Affidavit, Appendix D

PAGE 7

§ 7.5.1 The Owner and/or the Architect and the Architect's consultants shall be deemed the authors and owners of their respective Instruments of Service, including the Drawings and Specifications, and will retain all common law, statutory and other reserved rights in their Instruments of Service, including copyrights. The Contractor, Subcontractors, Sub-subcontractors, and suppliers shall not own or claim a copyright in the Instruments of Service. Submittal or distribution to meet official regulatory requirements or for other purposes in connection with the Project is not to be construed as publication in derogation of the Architect's or Architect's consultants' reserved rights.

...

The parties shall agree upon protocols governing the transmission and use of Instruments of Service or any other information or documentation in digital form.~~The parties will use AIA Document E203™–2013, Building Information Modeling and Digital Data Exhibit, to establish the protocols for the development, use, transmission, and exchange of digital data.~~

...

Any use of, or reliance on, all or a portion of a building information model without agreement to protocols governing the use of, and reliance on, the information contained in the model ~~and without having those protocols set forth in AIA Document E203™–2013, Building Information Modeling and Digital Data Exhibit, and the requisite AIA Document G202™–2013, Project Building Information Modeling Protocol Form,~~ shall be at the using or relying party's sole risk and without liability to the other party and its contractors or consultants, the authors of, or contributors to, the building information model, and each of their agents and employees.

PAGE 8

Additions and Deletions Report for AIA Document A104™ – 2017 (formerly A107™ – 2007). Copyright © 1936, 1951, 1958, 1961, 1963, 1966, 1970, 1974, 1978, 1987, 1997, 2007 and 2017 by The American Institute of Architects. All rights reserved. The "American Institute of Architects," "AIA," the AIA Logo, and "AIA Contract Documents" are registered trademarks and may not be used without permission. This document was produced by AIA software at 12:42:22 ET on 07/09/2021 under Order No.5191009158 which expires on 01/30/2022, is not for resale, is licensed for one-time use only, and may only be used in accordance with the AIA Contract Documents® Terms of Service. To report copyright violations, e-mail copyright@aia.org.
User Notes: (1517236076)

§ 7.9.1 Except as otherwise provided in Section 7.9.2, where the Contract Documents require one party to notify or give notice to the other party, such notice shall be provided in writing to the designated representative of the party to whom the notice is addressed and shall be deemed to have been duly served if delivered in person, by mail, by courier, or by electronic ~~transmission in accordance with AIA Document E203™–2013, Building Information Modeling and Digital Data Exhibit, if completed,~~ transmission, or as otherwise set forth below:

...

~~Where the Contract is based on the Cost of the Work plus the Contractor's Fee, with or without a Guaranteed Maximum Price, the~~ The Contractor accepts the relationship of trust and confidence established by this Agreement and covenants with the Owner to cooperate with the Architect and exercise the Contractor's skill and judgment in furthering the interests of the Owner; to furnish efficient business administration and supervision; to furnish at all times an adequate supply of workers and materials; and to perform the Work in an expeditious and economical manner consistent with the Owner's interests. The Owner agrees to furnish and approve, in a timely manner, information required by the Contractor and to make payments to the Contractor in accordance with the requirements of the Contract Documents.

...

§ 8.1.3 The Contractor shall be entitled to rely on the accuracy of information furnished by the Owner but shall exercise proper precautions and due diligence relating to the safe performance of the Work.

PAGE 9

§ 9.1.1 Execution of the Contract by the Contractor is a representation that the Contractor has visited the site, become generally familiar with local conditions under which the Work is to be performed and correlated personal observations with requirements of the Contract Documents. The Contractor represents and warrants by submission of a bid the Contractor has carefully examined the Contract Documents, any soil test reports, drainage studies, geotechnical or other reports and the site of the Work, and that, from Contractor's own investigations, Contractor has satisfied itself as to the nature and location of the Work, the character, quality and quantity of surface and subsurface materials likely to be encountered, the character of equipment and other facilities needed for the performance of the Work, the general and local conditions and all other materials which may in any way affect the Work or its performance. The Contractor shall not be entitled to any additional time or compensation for Contractor's failure to visit the site, or for any additional Work caused by the Contractor's fault, by improper construction, or by Contractor's failure to visit the site or to carefully study and compare the Contract Documents prior to execution of the Work. The Contractor further represents that the Contractor is familiar with all applicable codes, ordinances, laws, regulations and rules as they apply to the Work, and that the Contractor will abide by same.

...

§ 9.1.3 ~~The Contractor is not~~ Neither the Owner nor the Contractor is required to ascertain that the Contract Documents are in accordance with applicable laws, statutes, ordinances, codes, rules and regulations, or lawful orders of public authorities, but the Contractor shall promptly report to the Architect any nonconformity discovered by or made known to the Contractor as a request for information in such form as the Architect may require.

...

§ 9.3.1 Unless otherwise provided in the Contract Documents, the Contractor shall provide and pay for labor, materials, equipment, tools, construction equipment and machinery, ~~water, heat, utilities,~~ transportation, and other facilities and services necessary for proper execution and completion of the Work whether temporary or permanent and whether or not incorporated or to be incorporated in the Work.

§ 9.3.2 The Contractor shall enforce strict discipline and good order among the Contractor's employees and other persons carrying out the Work. The Contractor shall not permit employment of unfit persons or persons not skilled in tasks assigned to them. The Contractor releases, indemnifies and holds harmless the Owner for Contractor's forces' non-compliance with owner's drug-free, alcohol-free, weapon-free, harassment-free, and tobacco-free zones, contractor's forces' non-compliance with criminal law, or Contractor's or Contractor's forces' non-compliance with immigration law or regulations.

Additions and Deletions Report for AIA Document A104™ – 2017 (formerly A107™ – 2007). Copyright © 1936, 1951, 1958, 1961, 1963, 1966, 1970, 1974, 1978, 1987, 1997, 2007 and 2017 by The American Institute of Architects. All rights reserved. The "American Institute of Architects," "AIA," the AIA Logo, and "AIA Contract Documents" are registered trademarks and may not be used without permission. This document was produced by AIA software at 12:42:22 ET on 07/09/2021 under Order No.5191009158 which expires on 01/30/2022, is not for resale, is licensed for one-time use only, and may only be used in accordance with the AIA Contract Documents® Terms of Service. To report copyright violations, e-mail copyright@aia.org.
User Notes: (1517236076)

PAGE 10

~~The Contractor shall pay sales, consumer, use, and other similar taxes that are legally enacted when bids are received or negotiations concluded, whether or not yet effective or merely scheduled to go into effect.~~Owner is an exempt entity under the tax laws of the State of Nebraska. The Owner represents that this Project is eligible for exemption from the State Sales Tax on tangible personal property and material incorporated in the Project, provided that the Contractor fulfills the requirements of Neb. Rev. Stat. § 77-2704.15. For the purpose of establishing exemption, it is understood and agreed that the Contractor may be required to segregate materials and labor costs at the time a Contract is awarded. Contractor will accept Purchase Agent Appointment and Exempt Sales Certificate forms from the Owner. Contractor shall obtain Resale Certificates from Contractor's suppliers. Failure of Contractor or any Sub-Contractor to obtain Resale Certificates from their suppliers shall make the Contractor or Sub-Contractor responsible for absorbing the tax, without compensation from Owner. Contractor shall pay all necessary local, county and state taxes, income tax, compensation tax, social security and withholding payments as required by law. CONTRACTOR HEREBY RELEASES, INDEMNIFIES, AND HOLDS HARMLESS OWNER FROM ANY AND ALL CLAIMS AND DEMANDS MADE AS A RESULT OF THE FAILURE OF CONTRACTOR OR ANY SUBCONTRACTOR TO COMPLY WITH THE PROVISIONS OF ANY OR ALL SUCH LAWS AND REGULATIONS, provided that Owner provides Contractor with a timely submission of required tax exemption documents.

...

§ 9.6.1 ~~Unless otherwise provided in the Contract Documents, the Contractor shall secure and pay for the building permit as well as other permits, fees, licenses, and inspections by government agencies necessary for proper execution and completion of the Work that are customarily secured after execution of the Contract and legally required at the time bids are received or negotiations concluded.~~The Contractor shall be responsible for making and submitting application for the building permit. The Owner shall pay the municipality directly for the building permit and all other development "impact" fees, if any. The Contractor shall continue to be responsible for payment of other permits, governmental fees, licenses, and inspections necessary for proper execution of the Contract and which are legally required when bids or proposals are received. Such fees and expenses shall only be reimbursable to Contractor if expressly agreed to herein.

PAGE 11

§ 9.8.1 The Contractor, ~~promptly~~ within ten (10) days after being awarded the Contract, shall submit for the Owner's and Architect's information a Contractor's construction schedule for the Work. The schedule shall not exceed time limits current under the Contract Documents, shall be revised at appropriate intervals as required by the conditions of the Work and Project, shall be related to the entire Project to the extent required by the Contract Documents, and shall provide for expeditious and practicable execution of the Work.

...

§ 9.9.3 The Contractor shall not be required to provide professional services that constitute the practice of architecture or engineering unless such services are specifically required by the Contract Documents or unless the Contractor needs to provide such services in order to carry out the Contractor's own responsibilities. If professional design services or certifications by a design professional are specifically required, the Owner and the Architect will specify the performance and design criteria that such services must satisfy. The Contractor shall cause such services or certifications to be provided by an appropriately licensed design professional. If no criteria are specified, the design shall comply with applicable codes and ordinances. Each Party shall be entitled to rely upon the information provided by the other Party. The Architect will review and approve or take other appropriate action on submittals for the limited purpose of checking for conformance with information provided and the design concept expressed in the Contract Documents. The Architect's review of Shop Drawings, Product Data, Samples, and similar submittals shall be for the limited purpose of checking for conformance with information given and the design concept expressed in the Contract Documents. In performing such review, the Architect will approve, or take other appropriate action upon, the Contractor's Shop Drawings, Product Data, Samples, and similar submittals. The Contractor shall require that the licensed design professional carry comprehensive general liability and errors and omissions (professional liability) insurance coverage in the amounts and forms as specified in Article 17. In the event that the licensed design professional retained by the Contractor will be conducting on-site services or observations, the licensed design professional shall also carry worker's compensation insurance and comprehensive automobile liability in the amounts and forms as specified in Article 17.

Additions and Deletions Report for AIA Document A104™ – 2017 (formerly A107™ – 2007). Copyright © 1936, 1951, 1958, 1961, 1963, 1966, 1970, 1974, 1978, 1987, 1997, 2007 and 2017 by The American Institute of Architects. All rights reserved. The "American Institute of Architects," "AIA," the AIA Logo, and "AIA Contract Documents" are registered trademarks and may not be used without permission. This document was produced by AIA software at 12:42:22 ET on 07/09/2021 under Order No.5191009158 which expires on 01/30/2022, is not for resale, is licensed for one-time use only, and may only be used in accordance with the AIA Contract Documents® Terms of Service. To report copyright violations, e-mail copyright@aia.org.
User Notes: (1517236076)

PAGE 12

§ 9.15.1 To the fullest extent permitted by law, the Contractor shall indemnify and hold harmless the Owner, Architect, Architect's consultants, and agents and employees of any of them from and against claims, damages, losses and expenses, including but not limited to attorneys' fees, arising out of or resulting from performance of the Work, provided that such claim, damage, loss, or expense is attributable to bodily injury, sickness, disease or death, or to injury to or destruction of tangible property (other than the Work itself), but only to the extent caused by the negligent acts or omissions of the Contractor, a Subcontractor, anyone directly or indirectly employed by them, or anyone for whose acts they may be liable, regardless of whether or not such claim, damage, loss, or expense is caused in part by a party indemnified hereunder. ~~Such obligation~~ The Contractor also shall indemnify and hold harmless the Owner, Architect, Architect's consultants and agents and employees of any of them from and against all claims, damages, losses and expenses, including but not limited to attorneys' fees, arising out of or resulting from the Contractor's failure to comply with Section 19.7, Criminal History Checks, and from any bodily injury, sickness, disease or death caused by any non-"covered employee" who performs work on the Project Site. Such indemnification obligations shall not be construed to negate, abridge, or reduce other rights or obligations of indemnity which would otherwise exist as to a party or person described in this Section 9.15.1.

PAGE 13

§ 11.2 Unless otherwise stated in the Contract Documents, the Contractor, ~~as soon as practicable~~ within ten (10) days after award of the Contract, shall notify the Owner and Architect of the Subcontractors or suppliers proposed for each of the principal portions of the Work. The Contractor shall not contract with any Subcontractor or supplier to whom the Owner or Architect has made reasonable written objection within ten days after receipt of the Contractor's list of Subcontractors and suppliers. If the proposed but rejected Subcontractor was reasonably capable of performing the Work, the Contract Sum and Contract Time shall be increased or decreased by the difference, if any, occasioned by such change, and an appropriate Change Order shall be issued before commencement of the substitute Subcontractor's Work. The Contractor shall not be required to contract with anyone to whom the Contractor has made reasonable objection.

PAGE 15

§ 15.1.1 ~~Where the Contract is based on a Stipulated Sum or the Cost of the Work with a Guaranteed Maximum Price pursuant to Section 3.2 or 3.4, the~~ The Contractor shall submit a schedule of values to the Architect before the first Application for Payment, allocating the entire Stipulated Sum ~~or Guaranteed Maximum Price~~ to the various portions of the Work. The schedule of values shall be prepared in the form, and supported by the data to substantiate its accuracy required by the Architect. This schedule of values shall be used as a basis for reviewing the Contractor's Applications for Payment.

§ 15.1.2 The allocation of the Stipulated Sum ~~or Guaranteed Maximum Price~~ under this Section 15.1 shall not constitute a separate stipulated sum or guaranteed maximum price for each individual line item in the schedule of values.

§ 15.2 ~~Control Estimate~~[omit]

~~§ 15.2.1~~ ~~Where the Contract Sum is the Cost of the Work, plus the Contractor's Fee without a Guaranteed Maximum Price pursuant to Section 3.3, the Contractor shall prepare and submit to the Owner a Control Estimate within 14 days of executing this Agreement. The Control Estimate shall include the estimated Cost of the Work plus the Contractor's Fee.~~

~~§ 15.2.2~~ ~~The Control Estimate shall include:~~

- ~~**.1** the documents enumerated in Article 6, including all Modifications thereto;~~
- ~~**.2** a list of the assumptions made by the Contractor in the preparation of the Control Estimate to supplement the information provided by the Owner and contained in the Contract Documents;~~
- ~~**.3** a statement of the estimated Cost of the Work organized by trade categories or systems and the Contractor's Fee;~~
- ~~**.4** a project schedule upon which the Control Estimate is based, indicating proposed Subcontractors, activity sequences and durations, milestone dates for receipt and approval of pertinent information, schedule of shop drawings and samples, procurement and delivery of materials or equipment the Owner's occupancy requirements, and the date of Substantial Completion; and~~

Additions and Deletions Report for AIA Document A104™ – 2017 (formerly A107™ – 2007). Copyright © 1936, 1951, 1958, 1961, 1963, 1966, 1970, 1974, 1978, 1987, 1997, 2007 and 2017 by The American Institute of Architects. All rights reserved. The "American Institute of Architects," "AIA," the AIA Logo, and "AIA Contract Documents" are registered trademarks and may not be used without permission. This document was produced by AIA software at 12:42:22 ET on 07/09/2021 under Order No.5191009158 which expires on 01/30/2022, is not for resale, is licensed for one-time use only, and may only be used in accordance with the AIA Contract Documents® Terms of Service. To report copyright violations, e-mail copyright@aia.org.
User Notes: (1517236076)

~~.5 a list of any contingency amounts included in the Control Estimate for further development of design and construction.~~

~~**§ 15.2.3** When the Control Estimate is acceptable to the Owner and Architect, the Owner shall acknowledge it in writing. The Owner's acceptance of the Control Estimate does not imply that the Control Estimate constitutes a Guaranteed Maximum Price.~~

~~**§ 15.2.4** The Contractor shall develop and implement a detailed system of cost control that will provide the Owner and Architect with timely information as to the anticipated total Cost of the Work. The cost control system shall compare the Control Estimate with the actual cost for activities in progress and estimates for uncompleted tasks and proposed changes. This information shall be reported to the Owner, in writing, no later than the Contractor's first Application for Payment and shall be revised and submitted with each Application for Payment.~~

~~**§ 15.2.5** The Owner shall authorize preparation of revisions to the Contract Documents that incorporate the agreed-upon assumptions contained in the Control Estimate. The Owner shall promptly furnish such revised Contract Documents to the Contractor. The Contractor shall notify the Owner and Architect of any inconsistencies between the Control Estimate and the revised Contract Documents.~~

...

§ 15.3.2 ~~With each Application for Payment where the Contract Sum is based upon the Cost of the Work, or the Cost of the Work with a Guaranteed Maximum Price, the Contractor shall submit payrolls, petty cash accounts, receipted invoices or invoices with check vouchers attached, and any other evidence required by the Owner to demonstrate that cash disbursements already made by the Contractor on account of the Cost of the Work equal or exceed progress payments already received by the Contractor plus payrolls for the period covered by the present Application for Payment, less that portion of the progress payments attributable to the Contractor's Fee.~~[omit]

PAGE 16

§ 15.5.2 Neither the Owner nor Architect shall have an obligation to pay or see to the payment of money to a Subcontractor or supplier except as may otherwise be required by law. The Owner has the right to request written evidence from the Contractor that the Contractor has properly paid Subcontractors and material and equipment suppliers amounts paid by the Owner to the Contractor for subcontracted Work. If the Contractor fails to furnish such evidence within seven (7) calendar days, the Owner shall have the right to contact Subcontractors to ascertain whether they have been properly paid.

PAGE 17

§ 15.7.2 Final payment shall not become due until the Contractor has delivered to the Owner all documents required in Section 4.2.1 along with a complete release of all liens arising out of this Contract or receipts in full covering all labor, materials and equipment for which a lien could be filed, or a bond satisfactory to the Owner to indemnify the Owner against such ~~lien.~~ lien, an affidavit that payrolls, bills for materials and equipment, and other indebtedness connected with the Work have been paid or otherwise satisfied, and consent of surety to final payment. If such lien remains unsatisfied after payments are made, the Contractor shall refund to the Owner all money that the Owner may be compelled to pay in discharging such lien, including costs and reasonable attorneys' fees. Before final payment can be made, Department of Labor Division of Employment Form No. 16, Certificate of Contribution Status, must be received from the State of Nebraska Department of Labor certifying that the Contractor and each of its Subcontractors have paid all contributions and interest due to and including the calendar quarter immediately preceding the date of Substantial Completion.

§ 15.7.3 The making of final payment shall ~~constitute a waiver of claims by the Owner except those arising from~~

~~.1 liens, claims, security interests or encumbrances arising out of the Contract and unsettled;~~

~~.2 failure of the Work to comply with the requirements of the Contract Documents;~~

~~.3 terms of special warranties required by the Contract Documents; or~~

~~.4 audits performed by the Owner, if permitted by the Contract Documents, after final payment.~~not constitute a waiver of any claims by the Owner.

Additions and Deletions Report for AIA Document A104™ – 2017 (formerly A107™ – 2007). Copyright © 1936, 1951, 1958, 1961, 1963, 1966, 1970, 1974, 1978, 1987, 1997, 2007 and 2017 by The American Institute of Architects. All rights reserved. The "American Institute of Architects," "AIA," the AIA Logo, and "AIA Contract Documents" are registered trademarks and may not be used without permission. This document was produced by AIA software at 12:42:22 ET on 07/09/2021 under Order No.5191009158 which expires on 01/30/2022, is not for resale, is licensed for one-time use only, and may only be used in accordance with the AIA Contract Documents® Terms of Service. To report copyright violations, e-mail copyright@aia.org.
User Notes: (1517236076)

...

§ 15.5.5 PAYMENT CONTINGENT UPON AVAILABILITY OF APPROPRIATED FUNDS OR FUNDS APPROVED BY BOARD OF EDUCATION

Any other provisions of the Contract Documents to the contrary notwithstanding, it is expressly understood and agreed that the legal obligation of the Owner to pay the Contract Sum or any part thereof shall be contingent upon the availability of funds specifically approved by formal action of the Board of Education of the COLFAX COUNTY SCHOOL DISTRICT 19-0123, A/K/A SCHUYLER COMMUNITY SCHOOLS for the purpose of payment of the Contract Sum or any part thereof. lt is agreed that the obligations of the Contractor herein are expressly contingent upon reasonable proof to the Contractor that the Owner has funds specifically approved by formal action of the Board of Education of the COLFAX COUNTY SCHOOL DISTRICT 19-0123, A/K/A SCHUYLER COMMUNITY SCHOOLS for the purpose of payment of the Contract Sum or any part thereof.

PAGE 18

§ 16.2.2 ~~To the fullest extent permitted by law, the Owner shall indemnify and hold harmless the Contractor, Subcontractors, Architect, Architect's consultants, and agents and employees of any of them from and against claims, damages, losses, and expenses, including but not limited to attorneys' fees, arising out of or resulting from performance of the Work in the affected area, if in fact, the material or substance presents the risk of bodily injury or death as described in Section 16.2.1 and has not been rendered harmless, provided that such claim, damage, loss, or expense is attributable to bodily injury, sickness, disease or death, or to injury to or destruction of tangible property (other than the Work itself), except to the extent that such damage, loss, or expense is due to the fault or negligence of the party seeking indemnity.~~The Contractor shall provide written certification that no materials used in the Work contain lead or asbestos materials in them in excess of amounts allowed by federal, state or local standards, laws, codes, rules and regulations; the Federal Environmental Protection Agency (EPA) standards; and/or the Federal Occupational Safety and Health Administration (OSHA) standards, whichever is most restrictive. The Contractor shall provide this written certification as part of submittals under the Section in the Project Manual related to Contract Closeout.

§ 16.2.3 ~~If, without negligence on the part of the Contractor, the Contractor is held liable by a government agency for the cost of remediation of a hazardous material or substance solely by reason of performing Work as required by the Contract Documents, the Owner shall indemnify the Contractor for all cost and expense thereby incurred.~~

...

§ 17.1.2 Commercial General Liability insurance for the Project written on an occurrence form with policy limits ~~of not less than ($) each occurrence, ($) general aggregate, and ($) aggregate for products-completed operations hazard,~~ provided below, providing coverage for claims including

PAGE 19

Annual Unencumbered Limits of Liability (minimum)

Each Occurrence	$ 1,000,000
General Aggregate	$ 2,000,000

Specific Policy Coverages	Annual Unencumbered Limits of Liability (minimum)	
	Occurrence	Aggregate
Products / Completed Operations	$ 1,000,000	$ 2,000,000
Personal / Advertising Injury	$ 1,000,000	$ 2,000,000
Premises – Operations	$ 1,000,000	$ 2,000,000
Property Damage (broad form)	$ 1,000,000	$ 2,000,000
Contractual	$ 1,000,000	$ 2,000,000

Notes:

.1 Insurance on occurrence basis.

.2 General aggregate is per project.

Additions and Deletions Report for AIA Document A104™ – 2017 (formerly A107™ – 2007). Copyright © 1936, 1951, 1958, 1961, 1963, 1966, 1970, 1974, 1978, 1987, 1997, 2007 and 2017 by The American Institute of Architects. All rights reserved. The "American Institute of Architects," "AIA," the AIA Logo, and "AIA Contract Documents" are registered trademarks and may not be used without permission. This document was produced by AIA software at 12:42:22 ET on 07/09/2021 under Order No.5191009158 which expires on 01/30/2022, is not for resale, is licensed for one-time use only, and may only be used in accordance with the AIA Contract Documents® Terms of Service. To report copyright violations, e-mail copyright@aia.org.
User Notes: (1517236076)

.3 Deductible not to exceed $ 10,000 per occurrence.
.4 Contractual coverage to include construction contracts and subcontracts.
.5 Contractor to carry completed operations coverage for three (3) years following Substantial Completion (need certificate of insurance for each of three (3) years).
.6 Contractor and each Subcontractor shall have issued a separate policy.
.7 The policies for Contractor and each Subcontractor shall provide a blanket waiver of subrogation in favor of Owner and Architect.
.8 The policies for Contractor and each Subcontractor shall name Owner, Architect, and Architect's consultants as additional insureds.
.9 Additional insured endorsement to cover vicarious liability including completed operation.
.10 Policy shall have removed fellow employee exclusion.
.11 Modified Notice of Occurrence, for supervisors and up.
.12 Thirty (30) Day notice of cancellation basis.
.13 Policy may exclude cover for : Asbestos, Nuclear Energy, Engineers/Architect's E&O.

§ 17.1.3 Automobile Liability covering vehicles owned by the Contractor and ~~non-owned~~ non-owned, hired and leased vehicles used by the Contractor, with ~~policy limits~~ a minimum combined single limit of not less than One Million Dollars ($ 1,000,000) per accident, for bodily injury, death of any person, and property damage arising out of the ownership, maintenance, and use of those motor vehicles along with any other statutorily required automobile coverage. Insurance must include contractual liability coverage. If applicable, policy shall provide auto cargo pollution endorsement (ISO CA 99 48, or equivalent). If work to be performed by Contractor includes construction or demolition operations within 50 feet of any railroad property and affecting any railroad bridge or trestle, tracks, road beds, tunnel, under- pass, or crossing, then such policy will include coverage for work done within 50 feet of a railroad right of way. Insurance shall be on occurrence basis. Coverages shall include: comprehensive form; owned; hired and non-owned; bodily injury and property damage. Contractor and each subcontractor shall have issued a separate policy. The policies for Contractor and each Subcontractor shall provide a blanket waiver of subrogation in favor of Owner and Architect. The policies for Contractor and each Subcontractor shall name Owner, Architect, and Architect's consultants as additional insureds.

§ 17.1.4 The Contractor may achieve the required limits and coverage for Commercial General Liability and Automobile Liability through a combination of primary and excess or umbrella liability insurance, provided such primary and excess or umbrella insurance policies result in the same or greater coverage as those required under Section 17.1.2 and 17.1.3, and in no event shall any excess or umbrella liability insurance provide narrower coverage than the primary policy. The excess policy shall not require the exhaustion of the underlying limits only through the actual payment by the underlying insurers. The additional insured coverage shall be primary and non-contributory to any of the Owner's insurance policies and shall apply to both ongoing and completed operations.

PAGE 20

§ 17.1.6 Employers' Liability with policy limits not less than Five Hundred Thousand Dollars ($ 500,00) each accident, Five Hundred Thousand Dollars ($ 500,000) each employee, and Five Hundred Thousand Dollars ($ 500,000) policy limit. Each contractor and each subcontractor shall provide a blanket waiver of subrogation. Contractor and each Subcontractor issued a separate policy.

§ 17.1.7 If the Contractor is required to furnish professional services as part of the Work, the Contractor shall procure Professional Liability insurance covering performance of the professional services, with policy limits ~~of not less than ($) per claim and ($) in the aggregate.~~as follows: Where the Contact Sum is less than $500,000, policy limits shall be not less than One Million Dollars ($ 1,000,000) per claim and One Million Dollars ($ 1,000,000) in the aggregate; where the Contract Sum is greater than $500,000 but less than $1,000,000, policy limits shall be not less than Two Million Dollars ($ 2,000,000) per claim and Two Million Dollars ($ 2,000,000) in the aggregate. Insurance is required as per Section 9.9.3. Insurance may be on occurrence or claims-made basis. The Aggregate is per Project. Any deductible shall not to exceed $ 100,000 per occurrence. The policies shall provide a blanket waiver of subrogation in favor of Owner and Architect. The insurance shall remain in full force and effect for a period of three (3) years after the termination of this Agreement or the completion of the Contractor's services hereunder, whichever occurs later in time. The obligation to maintain Professional Liability insurance coverage shall survive termination of this Agreement.

Additions and Deletions Report for AIA Document A104™ – 2017 (formerly A107™ – 2007). Copyright © 1936, 1951, 1958, 1961, 1963, 1966, 1970, 1974, 1978, 1987, 1997, 2007 and 2017 by The American Institute of Architects. All rights reserved. The "American Institute of Architects," "AIA," the AIA Logo, and "AIA Contract Documents" are registered trademarks and may not be used without permission. This document was produced by AIA software at 12:42:22 ET on 07/09/2021 under Order No.5191009158 which expires on 01/30/2022, is not for resale, is licensed for one-time use only, and may only be used in accordance with the AIA Contract Documents® Terms of Service. To report copyright violations, e-mail copyright@aia.org.
User Notes: (1517236076)

§ 17.1.8 If the Work involves the transport, dissemination, use, or release of pollutants, the Contractor shall procure Pollution Liability insurance, with policy limits of not less than One Million Dollars ($ 1,000,000) per claim and One Million Dollars ($ 1,000,000) in the aggregate.

§ 17.1.9 Coverage under Sections 17.1.7 and 17.1.8 may be procured through a Combined Professional Liability and Pollution Liability insurance policy, with combined policy limits of not less than Two Million Dollars ($ 2,000,000) per claim and Two Million Dollars ($ 2,000,000) in the aggregate.

...

§ 17.1.14 ~~Other Insurance Provided by the Contractor~~
~~(List below any other insurance coverage to be provided by the Contractor and any applicable limits.)~~Excess liability coverage as follows:

Annual Unencumbered Limits of Liability (minimum)	Occurrence	Aggregate
Contract Sum < $ 500,000	$ 1,000,000	$ 1,000,000
$ 500,000 ≤ Contract Sum < $ 1,000,000	$ 2,000,000	$ 2,000,000

~~**Coverage** **Limits**~~

Notes:

.1 Insurance on occurrence basis.
.2 Aggregate is per Project.
.3 Contractor and each Subcontractor shall have issued a separate policy.
.4 The policies for Contractor and each Subcontractor shall provide a blanket waiver of subrogation in favor of Owner and Architect
.5 The policies for Contractor and each Subcontractor shall name Owner, Architect, and Architect's consultants as additional insureds

PAGE 21

§ 17.2.2.1 The Owner shall purchase and maintain, from an insurance company or insurance companies lawfully authorized to issue insurance in the jurisdiction where the Project is located, property insurance written on a builder's risk "all-risks" completed value or equivalent policy form and sufficient to cover the total value of the entire Project on a replacement cost basis. The Owner's property insurance coverage shall be no less than the amount of the initial Contract Sum, plus the value of subsequent Modifications and labor performed or materials or equipment supplied by others. The property insurance shall be maintained until Substantial Completion and thereafter as provided in Section 17.2.2.2, unless otherwise provided in the Contract Documents or otherwise agreed in writing by the parties to this Agreement. This insurance shall include the interests of the Owner, Contractor, Subcontractors, and Sub-subcontractors in the Project as insureds.~~This insurance shall include the interests of mortgagees as loss payees.~~

...

§ 17.2.2.3 If the insurance required by this Section 17.2.2 is subject to deductibles or self-insured retentions, the ~~Owner~~ Contractor shall be responsible for all loss not covered because of such deductibles or retentions.
PAGE 22

~~§ 17.2.3 Other Insurance Provided by the Owner~~
~~*(List below any other insurance coverage to be provided by the Owner and any applicable limits.)*~~

~~**Coverage** **Limits**~~

§ 17.3.1 The ~~Owner shall have the right to require the Contractor to furnish bonds covering faithful performance of the Contract and payment of obligations arising thereunder as stipulated in the Contract Documents on the date of~~

Additions and Deletions Report for AIA Document A104™ – 2017 (formerly A107™ – 2007). Copyright © 1936, 1951, 1958, 1961, 1963, 1966, 1970, 1974, 1978, 1987, 1997, 2007 and 2017 by The American Institute of Architects. All rights reserved. The "American Institute of Architects," "AIA," the AIA Logo, and "AIA Contract Documents" are registered trademarks and may not be used without permission. This document was produced by AIA software at 12:42:22 ET on 07/09/2021 under Order No.5191009158 which expires on 01/30/2022, is not for resale, is licensed for one-time use only, and may only be used in accordance with the AIA Contract Documents® Terms of Service. To report copyright violations, e-mail copyright@aia.org.
User Notes: (1517236076)

~~execution of the Contract.~~Contractor shall furnish, as required by Neb. Rev. Stat. § 52-118, bonds covering payment and performance of obligations arising under the Contract with minimum Best Rating "A". Bonds may be obtained through the Contractor's usual source and the cost thereof shall be included in the Contract Sum. The amount of the payment bond shall be equal to one hundred percent (100%) of the Contract Sum.

...

§ 17.3.3 The Contractor shall deliver the required bonds to the Owner not later than five (5) business days after execution of the Contract by the Owner. All bonds will be reviewed by the Architect for compliance with the Contract Documents. In the event that the Architect has any questions concerning the sufficiency of the bonds, the bonds will be referred to the Owner or the Owner's Representative with Architect's recommendation.

§ 18.1 The Contractor shall promptly correct Work rejected by the Architect or failing to conform to the requirements of the Contract Documents, whether discovered before or after Substantial Completion and whether or not fabricated, installed, or completed. Costs of correcting such rejected Work, including additional testing and inspections, the cost of uncovering and replacement, and compensation for the Architect's services and expenses made necessary thereby, shall be at the Contractor's ~~expense, unless compensable under Section A.1.7.3 in Exhibit A, Determination of the Cost of the Work.~~expense.

PAGE 23

§ 18.6 The one-year period for correction of Work shall in no way modify or alter the limitations period for commencement of any claims or causes of action by the Owner, whether in contract, tort, breach of warranty or otherwise. THE CONTRACTUAL ONE YEAR PERIOD FOR CORRECTION OF THE WORK IS IN ADDITION TO ALL WARRANTY OBLIGATIONS OF THE CONTRACTOR AND SHALL NOT BE APPLIED TO LIMIT ANY APPLICABLE STATUTORY PERIOD OF LIMITATION OR REPOSE.

...

The Contract shall be governed by the law of the ~~place where the Project is located, excluding that jurisdiction's choice of law rules. If the parties have selected arbitration as the method of binding dispute resolution, the Federal Arbitration Act shall govern Section 21.6.~~State of Nebraska and, where applicable, federal laws. Exclusive jurisdiction and venue shall be in the state or federal courts in Colfax County, Nebraska.

...

Dan Hoesing, Superintendent
120 W. 20th Street
Schuyler, Nebraska 68661
Tel: 402-352-5514
Email: dan.hoesing@schuylercommunityschools.org

...

Mike Brandt, President
2512 12th Street
Columbus, NE 68601
Tel: 402-564-3021
Email: mgsi@megavision.com

PAGE 24

§ 19.7 Equal Opportunity in Employment

§ 19.7.1 The Contractor and any subcontractors shall not discriminate against any employee or applicant for employment to be employed in the performance of the Agreement, with respect to hire, tenure, terms, conditions or privileges of employment, because of sex, disability, race, color, religion, veteran status, national or ethnic origin, age, marital status, pregnancy, childbirth or related medical condition, or other protected status, as prohibited by the Nebraska Fair Employment Practice Act or federal law. The Contractor agrees to post in conspicuous places available

Additions and Deletions Report for AIA Document A104™ – 2017 (formerly A107™ – 2007). Copyright © 1936, 1951, 1958, 1961, 1963, 1966, 1970, 1974, 1978, 1987, 1997, 2007 and 2017 by The American Institute of Architects. All rights reserved. The "American Institute of Architects," "AIA," the AIA Logo, and "AIA Contract Documents" are registered trademarks and may not be used without permission. This document was produced by AIA software at 12:42:22 ET on 07/09/2021 under Order No.5191009158 which expires on 01/30/2022, is not for resale, is licensed for one-time use only, and may only be used in accordance with the AIA Contract Documents® Terms of Service. To report copyright violations, e-mail copyright@aia.org.
User Notes: (1517236076)

to employees and applicants, notices setting forth the Contractor's nondiscrimination policies. The Contractor and the Contractor's subcontractors shall, in all solicitations or advertisements for employees placed by them or on their behalf, state that all qualified applicants will receive consideration for employment without regard to sex, disability, race, color, religion, veteran status, national or ethnic origin, age, marital status, pregnancy, childbirth or related medical condition, or other protected status.

§ 19.7.2 The Contractor hereby warrants and represents that it is in compliance with said Act. Any failure to so comply during the performance of this Agreement shall be a material breach of the Agreement. The Contractor by execution of this agreement certifies that the Contractor is an equal opportunity employer and actively recruits a well-qualified and diverse staff including minority applicants as well as historically underutilized business subcontractors, and does not discriminate against any employee or applicant for employment or subcontractor by reason of sex, disability, race, color, religion, veteran status, national or ethnic origin, age, marital status, pregnancy, childbirth or related medical condition, or other protected status. By execution of this agreement, the Contractor agrees to actively continue and implement this policy throughout any awarded project.

§ 19.8 Criminal History Checks

§ 19.8.1 The Contractor shall obtain all criminal history information regarding its "covered employees", as defined below. Before beginning any Work on the Project, Contractor, and all subcontractors and suppliers, will provide written certification to the Owner that Contractor has complied with the statutory requirements as of that date. Upon request by Owner, Contractor will provide, in writing, updated certifications and the names and any other requested information regarding covered employees, so that the Owner may obtain criminal history record information on the covered employees. Contractor shall assume all expenses associated with obtaining the initial criminal history record information and the Owner shall be responsible for expenses associated with any subsequent request. Contractor shall include similar criminal history check provisions in all contracts with subcontractors and suppliers.

§ 19.8.2 The Contractor will not assign any "covered employee" with a "disqualifying criminal history", as those terms are defined below, to work on the Project. If the Contractor receives information that a covered employee has a reported disqualifying criminal history, then Contractor will immediately remove the covered employee from the Project and notify the Owner in writing within three (3) business days. If the Owner objects to the assignment of any covered employee on the basis of the covered employee's criminal history record information, then Contractor agrees to discontinue using that covered employee to provide services on Owner's Project.

§ 19.8.3 For the purposes of this Section, "covered employees" means employees, agents or subcontractors of Contractor who has or will have continuing duties related to the services to be performed on Owner's Project and has or will have direct contact with Owner's students. The Owner will decide what constitutes direct contact with Owner's students. "Disqualifying criminal history" means any conviction or other criminal history of the following offenses: a felony offense under Nebraska Criminal Code Article 3 Offenses Against The Person; an offense for which a defendant is required to register as a sex offender under the Nebraska Sex Offender Registration Act, Neb. Rev. Stat. §§ 29-4001 et seq.

§ 19.8.4 The Contractor shall establish a school building construction site security protocol which shall include providing all employees of the contractors, employees of sub-contractors to the contractors, and other project related personnel with a "Project" badge or sticker created by the Contractor; each badge or sticker shall have a unique identifier number. This unique identifier number must be logged by the Contractor's Site Superintendent or Project Manager so as to associate each individual's name and company with the number on the badge. A copy of the log shall be kept at all times in the office of the Contractor's Site Superintendent and must be submitted to the Owner's Administrative office at the end of each week. If wearing the Contractor-provided "Project" badge is not desirable and will interfere with the work being performed by that individual, the Contractor shall provide a sticker with the necessary information for identification for affected personnel, which shall include the unique number on the identification. This sticker may be affixed to the individual worker's hard hats. All means of identification other than what is provided by the Contractor must be approved by the Contractor's on-site Superintendent or Project Manager prior to implementation by the contractor. Identification must be visible at all times. Personnel failing to comply with the job-site security requirements may be required by the Contractor or Owner's personnel to leave the job-site.

§ 19.9 Contributions under Nebraska Employment Security Law

The Contractor and all Subcontractors engaged to perform any part of the Work shall make payment to the Unemployment Compensation Fund of the State of Nebraska of all contributions and interest due under the provisions

Additions and Deletions Report for AIA Document A104™ – 2017 (formerly A107™ – 2007). Copyright © 1936, 1951, 1958, 1961, 1963, 1966, 1970, 1974, 1978, 1987, 1997, 2007 and 2017 by The American Institute of Architects. All rights reserved. The "American Institute of Architects," "AIA," the AIA Logo, and "AIA Contract Documents" are registered trademarks and may not be used without permission. This document was produced by AIA software at 12:42:22 ET on 07/09/2021 under Order No.5191009158 which expires on 01/30/2022, is not for resale, is licensed for one-time use only, and may only be used in accordance with the AIA Contract Documents® Terms of Service. To report copyright violations, e-mail copyright@aia.org.
User Notes: (1517236076)

of the Employment Security Law, Neb. Rev. Stat. §§ 48-601, et seq. (Reissue 1988), as amended, on wages paid to individuals employed in the performance of the Contract; and before final payment shall be made of the final three percent (3%) of this Contract, the Contractor shall secure and file with the Owner, and cause any Subcontractor to secure and file with the Owner, written clearance from the Commissioner of the Department of Labor of the State of Nebraska, certifying that all payments then due of contributions or interest which may have arisen under this Contract have been made by the Contractor or any Subcontractor to the Unemployment Compensation Fund.

§ 19.10 Verification of Immigration Status

§ 19.10.1 The Contractor agrees to use the federal immigration verification system to determine the work eligibility status of new employees physically performing services on the Project within the State of Nebraska. The federal immigration verification system means the electronic verification of the work authorization program authorized by the Illegal Immigration Reform and Immigrant Responsibility Act of 1996, 8 U.S.C. 1324a, known as the E-Verify Program, or an equivalent federal program designated by the United States Department of Homeland Security or other federal agency authorized to verify the work eligibility status of a newly hired employee. This requirement applies to all Subcontractors of the Contractor. The Contractor shall, by written agreement, require compliance with the federal immigration verification system by all Subcontractors. If the Contractor is an individual or sole proprietorship, the following applies:

.1 The Contractor must complete the United States Citizenship Attestation Form, available on the Department of Administrative Services website at www.das.state.ne.us.

.2 If the Contractor indicates on such attestation form that he or she is a qualified alien, the Contractor agrees to provide the US Citizenship and Immigration Services documentation required to verify the Contractor's lawful presence in the United States using the Systematic Alien Verification for Entitlements (SAVE) Program.

.3 The Contractor understands and agrees that lawful presence in the United States is required and the Contractor may be disqualified or the contract terminated if such lawful presence cannot be verified as required by Neb. Rev. Stat. §4-108.

§ 19.11 Sovereign Immunity

By entering into this Agreement, the Owner does not waive any of its immunities from suit and/or liability, except as otherwise specifically provided herein and as specifically authorized by law.

§ 19.12 Nebraska Employee Classification Act

Contractor agrees to abide by the provisions of the Nebraska Employee Classification Act, Neb. Rev. Stat. §§ 48-2901 to 48-2912. In compliance with that Act, the Contractor shall to submit to the Owner, upon execution of the Agreement, the affidavit marked as Appendix D, attached hereto and incorporated herein by this reference. The Contractor further acknowledges that providing a false affidavit under Neb. Rev. Stat. § 48-2911 may subject the Contractor to the penalties of perjury and upon a second or subsequent violation the Contractor shall be barred from contracting with the State of Nebraska or any Nebraska political subdivision for a period of three (3) years after the date of discovery of the falsehood. The Contractor shall require any and all subcontractors who perform work pursuant to the Agreement to provide a similar affidavit, which shall be made available to the Owner upon request.

PAGE 26

The Owner may, at any time, terminate the Contract for the Owner's convenience and without cause. The Owner shall pay the Contractor for Work executed; and costs incurred by reason of such termination, including costs attributable to termination of ~~Subcontracts; and a termination fee, if any, as follows:~~
~~*(Insert the amount of or method for determining the fee payable to the Contractor by the Owner following a termination for the Owner's convenience, if any.)*~~

Subcontracts, but no overhead and profit on the Work not executed.

PAGE 27

The Owner and Contractor shall commence all claims and causes of action against the other and arising out of or related to the Contract in accordance with the requirements of the final dispute resolution method selected in this Agreement whether in contract, tort, breach of warranty, or otherwise, within the period specified by applicable ~~law, but in any case not more than 10 years after the date of Substantial Completion of the Work. The Owner and Contractor waive all claims and causes of action not commenced in accordance with this Section 21.3.~~law.

Additions and Deletions Report for AIA Document A104™ – 2017 (formerly A107™ – 2007). Copyright © 1936, 1951, 1958, 1961, 1963, 1966, 1970, 1974, 1978, 1987, 1997, 2007 and 2017 by The American Institute of Architects. All rights reserved. The "American Institute of Architects," "AIA," the AIA Logo, and "AIA Contract Documents" are registered trademarks and may not be used without permission. This document was produced by AIA software at 12:42:22 ET on 07/09/2021 under Order No.5191009158 which expires on 01/30/2022, is not for resale, is licensed for one-time use only, and may only be used in accordance with the AIA Contract Documents® Terms of Service. To report copyright violations, e-mail copyright@aia.org.
User Notes: (1517236076)

...

§ 21.5 The parties shall endeavor to resolve their disputes by ~~mediation which, unless the parties mutually agree otherwise, shall be administered by the American Arbitration Association in accordance with their Construction Industry Mediation Procedures in effect on the date of this Agreement.~~ mediation. A request for mediation shall be made in writing, delivered to the other party to this Agreement, and filed with the person or entity administering the mediation. The request may be made concurrently with the binding dispute resolution but, in such event, mediation shall proceed in advance of binding dispute resolution proceedings, which shall be stayed pending mediation for a period of 60 days from the date of filing, unless stayed for a longer period by agreement of the parties or court order.~~If an arbitration is stayed pursuant to this Section, the parties may nonetheless proceed to the selection of the arbitrator(s) and agree upon a schedule for later proceedings.~~

§ 21.6 ~~If the parties have selected arbitration as the method for binding dispute resolution in this Agreement, any claim, subject to, but not resolved by, mediation shall be subject to arbitration which, unless the parties mutually agree otherwise, shall be administered by the American Arbitration Association, in accordance with the Construction Industry Arbitration Rules in effect on the date of this Agreement. Demand for arbitration shall be made in writing, delivered to the other party to the Contract, and filed with the person or entity administering the arbitration. The award rendered by the arbitrator or arbitrators shall be final, and judgment may be entered upon it in accordance with applicable law in any court having jurisdiction thereof.~~Notwithstanding anything to the contrary in the Contract Documents or in any document forming a part hereof, there shall be no mandatory arbitration for any dispute arising hereunder.

~~**§ 21.7** Subject to the rules of the American Arbitration Association or other applicable arbitration rules, either party, at its sole discretion, may consolidate an arbitration conducted under this Agreement with any other arbitration to which it is a party provided that (1) the arbitration agreement governing the other arbitration permits consolidation; (2) the arbitrations to be consolidated substantially involve common questions of law or fact; and (3) the arbitrations employ materially similar procedural rules and methods for selecting arbitrator(s).~~

~~**§ 21.8** Subject to the rules of the American Arbitration Association or other applicable arbitration rules, any party to an arbitration may include by joinder persons or entities substantially involved in a common question of law or fact whose presence is required if complete relief is to be accorded in arbitration provided that the party sought to be joined consents in writing to such joinder. Consent to arbitration involving an additional person or entity shall not constitute consent to arbitration of a Claim not described in the written Consent.~~

~~**§ 21.9** The foregoing agreement to arbitrate and other agreements to arbitrate with an additional person or entity duly consented to by parties to this Agreement, shall be specifically enforceable under applicable law in any court having jurisdiction thereof.~~

...

The Contractor ~~and Owner waive claims against each other~~ waives claims against the Owner for consequential damages arising out of or relating to this ~~Contract. This mutual waiver includes~~

~~.1 damages incurred by the Owner for rental expenses, for losses of use, income, profit, financing, business and reputation, and for loss of management or employee productivity or of the services of such persons; and~~

~~.2 damages incurred by the~~ Contract, including but not limited to damages incurred by the Contractor for principal office expenses including the compensation of personnel stationed there, for losses of financing, business and reputation, and for loss of profit except anticipated profit arising directly from the Work.

~~This mutual waiver is applicable, without limitation, to all consequential damages due to either party's termination in accordance with Article 20. Nothing contained in this Section 21.11 shall be deemed to preclude an award of liquidated damages, when applicable, in accordance with the requirements of the Contract Documents.~~The Owner expressly reserves any and all claims for consequential damages arising out of or relating to this Contract.

Additions and Deletions Report for AIA Document A104™ – 2017 (formerly A107™ – 2007). Copyright © 1936, 1951, 1958, 1961, 1963, 1966, 1970, 1974, 1978, 1987, 1997, 2007 and 2017 by The American Institute of Architects. All rights reserved. The "American Institute of Architects," "AIA," the AIA Logo, and "AIA Contract Documents" are registered trademarks and may not be used without permission. This document was produced by AIA software at 12:42:22 ET on 07/09/2021 under Order No.5191009158 which expires on 01/30/2022, is not for resale, is licensed for one-time use only, and may only be used in accordance with the AIA Contract Documents® Terms of Service. To report copyright violations, e-mail copyright@aia.org.
User Notes: (1517236076)

ARTICLE 22 DAVIS BACON ACT

§ 22.1 This project may be financed by the Owner in whole or in part with funds provided through the Elementary and Secondary School Emergency Relief Fund ("ESSER") and other federal funds. ESSER funds are subject to the Davis-Bacon Act ("DBA") prevailing wage rate and other requirements. The Contractor, and all subcontractors, shall comply with all federal, state and local laws, ordinances and regulations applicable to this federally-funded project, including but not limited to, the provisions of the DBA, as it now exists and as it may be amended or supplemented from time to time, and any regulations promulgated thereto, including the specific requirements contained in 29 C.F.R. § 5.5 and Appendix F and Exhibit 1 attached to and made a part of this Contract.

§ 22.2 The Contractor and all Subcontractors hired by the Contractor on this project agree to and shall provide and submit to proper authorities all necessary written documentation and certifications in accordance with all reporting requirements of the DBA. The Contractor shall require that the contracts of all Subcontractors hired by the Contractor on this project contain contract provisions identical to the provisions contained in this section, including Appendix F and Exhibit 1.

§ 22.3 A breach of any of the provisions contained in this Article 22 or a failure to comply with any of the requirements under the DBA, as it now exists and as it may be amended or supplemented from time to time, and any regulations promulgated thereto, by the Contractor or any of its Subcontractors shall constitute a substantial and material breach of the Contract Documents and shall be sufficient grounds for termination of the contract by the Owner.

§ 22.4 To the fullest extent permitted by law, the Contractor shall indemnify, defend, and hold harmless the Owner, its Board of Education, administrators, employees and agents, and the Architect, Architect's consultants, agents and employees of any of them from and against all claims, damages, suites, losses, expenses or causes of action which arise as a result of the failure of the Contractor, Subcontractors, or officers, employees, or agents of any of them, to comply with any of the requirements of the DBA.

PAGE 28

Colfax County School District 19-0123, a/k/a Schuyler Community Schools	**Midwest Glass Service, Inc.**
...	
	Daniel Nebuda, President

Additions and Deletions Report for AIA Document A104™ – 2017 (formerly A107™ – 2007). Copyright © 1936, 1951, 1958, 1961, 1963, 1966, 1970, 1974, 1978, 1987, 1997, 2007 and 2017 by The American Institute of Architects. All rights reserved. The "American Institute of Architects," "AIA," the AIA Logo, and "AIA Contract Documents" are registered trademarks and may not be used without permission. This document was produced by AIA software at 12:42:22 ET on 07/09/2021 under Order No.5191009158 which expires on 01/30/2022, is not for resale, is licensed for one-time use only, and may only be used in accordance with the AIA Contract Documents® Terms of Service. To report copyright violations, e-mail copyright@aia.org.
User Notes: (1517236076)

--YOUR ANNUAL MEMBERSHIP PROVIDES SUPPORT FOR --

Nebraska Rural Community Schools Association

STATE LEGISLATIVE ADVOCACY NRCSA is active in representing rural public schools in the Unicameral. The Executive Director is the main spokesperson for NRCSA, but is also represented by the lobbying firm of Nowka and Edwards. NRCSA's Legislative Committee includes 20 Superintendents from member schools and helps to direct the legislative efforts of the organization. NRCSA is also represented in the "Nebraskans United for Property Tax Reform and Education" and the "Education Association Coalition", both of which serve as coalitions that work to speak on behalf of public education interests.	**RURAL ADVOCACY** NRCSA is the only organization that speaks solely on behalf of public rural schools in the State of Nebraska.	**SUPERINTENDENT SEARCHES** NRCSA's Superintendent Search Service is conducted by veteran Superintendents whose professional lives were involved in rural education in Nebraska. The service is available to all Nebraska school districts, with member districts paying a lower rate than non-member districts. A professional cost effective proposal and fee structure is available upon request.
PLANNING WORKSHOPS The NRCSA Planning Support Service is an elective service that assists districts in planning and goal-setting. The service is conducted by veteran Superintendents whose professional lives were involved in rural education in Nebraska.	**NATIONAL ADVOCACY** NRCSA is a member of the National Rural Education Advocacy Consortium (NREAC), which represents the interests of rural public schools in national forums where education issues are decided.	**LEGISLATIVE FORUM** During each legislative session NRCSA offers a forum for Board members and administrators. The forum provides the opportunity to hear from Senators as to what is happening in the Unicameral, as well as to provide input to Senators. The forum is held in Lincoln.
COMMUNICATIONS NRCSA provides regular updates from the Executive Director to member schools. A more in-depth update is provided to all members just prior to monthly Board of Education meetings. The NRCSA webpage is www.nrcsa.net. NRCSA also has a social media presence on Twitter (@ NRCSA1980) and on Facebook (www.facebook.com/nrcsahome).	**SPRING CONFERENCE** NRCSA offers an annual conference in Kearney in March. The conference targets issues and interests of rural schools. An opportunity is created to network with other rural school districts and to interact directly with policymakers and NRCSA leaders.	**GARY FISHER FINE ARTS SCHOLARSHIPS** NRCSA awards two $2,000 scholarships to high school seniors from NRCSA-member schools who are entering college with the plan to major in a fine arts field.
DISTRICT MEETINGS Each fall NRCSA conducts a meeting in each of the six membership districts. These meetings provide an opportunity for rural schools to connect with NRCSA leadership on a face-to-face basis.	**US BANK ONE CARD PROGRAM** NRCSA has partnered with US Bank to provide this unique purchase card program for school districts. Individual school districts decide which staff members receive purchase cards. The district has control over where purchases can be made and for what amounts. This can be especially helpful when sending sponsors out with student groups.	**NRCSA AWARDS** NRCSA annually recognizes individuals who are outstanding at serving member districts. At the Spring Conference each year NRCSA recognizes an Outstanding Elementary Teacher, Secondary Teacher, Classified Staff Member, ESU Staff Member, Music Teacher, Principal, Board of Education Member, and Superintendent/ESU Administrator.
NRCSA EXECUTIVE BOARD The 10-member Executive Board provides leadership and direction for the organization. Each of the six NRCSA districts is represented by at least one Superintendent from a district within the district.	**NRCSA SCHOLARSHIPS** NRCSA annually awards 14 $2,000 scholarships to high school seniors from NRCSA-member schools who are entering college with the goal of becoming school teachers.	**GLOBAL TELETHERAPY** Global Teletherapy is a partner with NRCSA that provides elective services such as Speech, Behavioral, and Occupational Teletherapies. Global provides services that are sometimes difficult to fill.
NEBRASKANS UNITED NRCSA is a strong member of this group which includes most education and ag-related organizations in the State. The purpose is to work to provide property tax relief, as well as to protect and promote funding to public education.	**CORONAVIRUS ISSUES** Over 100 NRCSA member Superintendents and ESU Administrators worked together to produce NRCSA's Reopening Document to help districts develop their own plans for reopening school in the fall.	**LEADERSHIP OPPORTUNITIES** Each year there are over 50 leadership positions on the Executive Committee or other NRCSA committees that provide opportunities for member Superintendents.
EDUCATION ASSOCIATIONS COALITION NRCSA is an active member of this group that is comprised of all of the major education associations in the state. The purpose of the group is to work together on legislative issues facing public education.	**NATIONAL RURAL EDUCATION ASSOCIATION** NRCSA is a strong member of the NREA. The NREA provides leadership on issues facing rural education on the national level. Dr. Jon Habben, former NRCSA Executive Director of NRCSA, will serve as Past President of NREA in the coming year.	**RURAL TEACHER SHORTAGE** NRCSA has started a Rural Teacher Committee that was established to find ways to address the shortage of teachers in rural schools. Twelve member Superintendents work with representatives from Chadron State College, Wayne State College and Peru State College in this work.

Nebraska Rural Community Schools Association

Invoice

Nebraska Rural Community Schools Association
455 S.11th St, Ste B
Lincoln, NE 68508

Invoice #: Mem 166

Date: 7/1/2021

Bill To:

SCHUYLER COMMUNITY SCHOOLS
120 W 20TH ST
SCHUYLER NE 68661

For: NRCSA Membership Dues

Description		Amount
2021-22 NRCSA Membership Dues		*$850.00*
	Invoice Total	*$850.00*

Make all checks payable to **NRCSA**

If you have any questions concerning this invoice, contact Jeff Bundy at (402) 202-6028
or e-mail:jbundy@nrcsa.net

PEKNY & ASSOCIATES, CPA'S, PC

2458 18th Avenue
Columbus, NE 68601
402-564-7138
FAX 402-564-7139

200 E. 12th Street
Schuyler, NE 68661
402-352-8898
FAX 402-352-8741

July 1, 2020

To the School Board of
Schuyler Community Schools
District No. 123, Colfax County

And

Dr. Dan Hoesing, Superintendent
Schuyler Community Schools

We are pleased to confirm our understanding of the services we are to provide to the Schuyler Community Schools, for the year ended August 31, 2020. We will audit the financial statements of the governmental activities, and each major fund, and the aggregate remaining fund information, including the notes to the financial statements, which collectively comprise the financial statements, of Schuyler Community Schools, as of and for the year ended August 31, 2020.

We have also been engaged to report on supplementary information other than RSI (Required Supplementary Information) that accompanies Schuyler Community Schools' financial statements. We will subject the following supplementary information to the auditing procedures applied in our audit of the financial statements and certain additional procedures, including comparing and reconciling such information directly to the underlying accounting and other records used to prepare the financial statements or to the financial statements themselves, and other additional procedures in accordance with auditing standards generally accepted in the United States of America, and we will provide an opinion on it in relation to the financial statements as a whole, in our report combined with our auditor's report on the financial statements:

1. Schedule of Expenditures of Federal Awards.
2. Combining Schedule of Assets and Fund Balance – Modified Cash Basis.
3. Combining Schedule of Receipts, Disbursements, and Changes in Fund Balance – Modified Cash Basis.
4. Management Discussion and Analysis

The following other information accompanying the financial statements will not be subjected to the auditing procedures applied in our audit of the financial statements, and our auditor's report will not provide an opinion or any assurance on that other information.

1. Budgetary Comparison Schedules.

Audit Objectives

The objective of our audit is the expression of opinions as to whether your financial statements are fairly presented, in all material respects, in conformity with the modified cash basis of accounting, and to report on the fairness of the supplementary information referred to in the second paragraph when considered in relation to the financial statements as a whole. The objective also includes reporting on—

- Internal control over financial reporting and compliance with the provisions of laws, regulations, contracts, and award agreements, noncompliance with which could have a material effect on the financial statements in accordance with *Government Auditing Standards*.

- Internal control over compliance related to major programs and an opinion (or disclaimer of opinion) on compliance with federal statutes, regulations, and the terms and conditions of federal awards that could have a direct and material effect on each major program in accordance with the Single Audit Act Amendments of 1996 and Title 2 U.S. *Code of Federal Regulations* (CFR) Part 200, *Uniform Administrative Requirements, Cost Principles, and Audit Requirements for Federal Awards* (Uniform Guidance).

The *Government Auditing Standards* report on internal control over financial reporting and on compliance and other matters will include a paragraph that states that (1) the purpose of the report is solely to describe the scope of testing of internal control and compliance and the results of that testing, and not to provide an opinion on the effectiveness of the District's internal control or on compliance, and (2) the report is an integral part of an audit performed in accordance with *Government Auditing Standards* in considering the entity's internal control and compliance. The Uniform Guidance report on internal control over compliance will include a paragraph that states that the purpose of the report on internal control over compliance is solely to describe the scope of testing of internal control over compliance and the results of that testing based on the requirements of the Uniform Guidance. Both reports will state that the report is not suitable for any other purpose.

Our audit will be conducted in accordance with auditing standards generally accepted in the United States of America; the standards for financial audits contained in *Government Auditing Standards,* issued by the Comptroller General of the United States; the Single Audit Act Amendments of 1996; and the provisions of the Uniform Guidance; and the guide to auditing and reporting for Nebraska School Districts issued by the Nebraska Department of Education, and will include tests of accounting records, a determination of major program(s) in accordance with the Uniform Guidance, and other procedures we consider necessary to enable us to express such opinions. We will issue written reports upon completion of our Single Audit. Our reports will be addressed to the Board of Education of Schuyler Community Schools. We cannot provide assurance that unmodified opinions will be expressed. Circumstances may arise in which it is necessary for us to modify our opinions or add emphasis-of-matter or other-matter paragraphs. If our opinions are other than unmodified, we will discuss the reasons with you in advance. If, for any reason, we are unable to complete the audit or are unable to form or have not formed opinions, we may decline to express opinions or issue reports, or we may withdraw from this engagement. If circumstances occur related to the condition of your records, the availability of sufficient, appropriate audit evidence, or the existence of a significant risk of material misstatement of the financial statements caused by error, fraudulent financial reporting, or misappropriation of assets, which in our professional judgement prevent us from completing the audit or forming an opinion on the financial statements, we retain the right to take any course of action permitted by professional standards, including declining to express an opinion or issue a report, or withdrawing from the engagement.

Audit Procedures – General

An audit includes examining, on a test basis, evidence supporting the amounts and disclosures in the financial statements; therefore, our audit will involve judgment about the number of transactions to be examined and the areas to be tested. An audit also includes evaluating the appropriateness of accounting policies used and the reasonableness of significant accounting estimates made by management, as well as evaluating the overall presentation of the financial statements. We will plan and perform the audit to obtain reasonable assurance about whether the financial statements are free of material misstatement, whether from (1) errors, (2) fraudulent financial reporting, (3) misappropriation of assets, or (4) violations of laws or governmental regulations that are attributable to the District or to acts by management or employees acting on behalf of the District. Because the determination of abuse is subjective, *Government Auditing Standards* do not expect auditors to provide reasonable assurance of detecting abuse.

Because of the inherent limitations of an audit, combined with the inherent limitations of internal control, and because we will not perform a detailed examination of all transactions, there is a risk that material misstatements or noncompliance may exist and not be detected by us, even though the audit is properly planned and performed in accordance with U.S. generally accepted auditing standards and *Government Auditing Standards.* In addition, an audit is not designed to detect immaterial misstatements or violations of laws or governmental regulations that do not have a direct and material effect on the financial statements or on major programs. However, we will inform the appropriate level of management of any material errors, any fraudulent financial reporting, or misappropriation of assets that come to our attention. We will also inform the appropriate level of management of any violations of laws or governmental regulations that come to our attention, unless clearly inconsequential, and of any material abuse that comes to our attention. We will include such matters in the reports required for a Single Audit. Our responsibility as auditors is limited to the period covered by our audit and does not extend to any later periods for which we are not engaged as auditors.

Our procedures will include tests of documentary evidence supporting the transactions recorded in the accounts, and may include tests of the physical existence of assets, and direct confirmation of certain other assets and liabilities by correspondence with selected individuals, funding sources, creditors, and financial institutions. We will request written representations from your attorneys as part of the engagement, and they may bill you for responding to this inquiry. At the conclusion of our audit, we will require certain written representations from you about your responsibilities for the financial statements; schedule of expenditures of federal awards; federal award programs; compliance with laws, regulations, contracts, and grant agreements; and other responsibilities required by general accepted auditing standards.

Audit Procedures – Internal Controls

Our audit will include obtaining an understanding of the District and its environment, including internal control, sufficient to assess the risks of material misstatement of the financial statements and to design the nature, timing, and extent of further audit procedures. Tests of controls may be performed to test the effectiveness of certain controls that we consider relevant to preventing and detecting errors and fraud that are material to the financial statements and to preventing and detecting misstatements resulting from illegal acts and other noncompliance matters that have a direct and material effect on the financial statements. Our tests, if performed, will be less in scope than would be necessary to render an opinion on internal control and, accordingly, no opinion will be expressed in our report on internal control issued pursuant to *Government Auditing Standards.*

As required by the Uniform Guidance, we will perform tests of controls over compliance to evaluate the effectiveness of the design and operation of controls that we consider relevant to preventing or detecting material noncompliance with compliance requirements applicable to each major federal award program. However, our tests will be less in scope than would be necessary to render an opinion on those controls and, accordingly, no opinion will be expressed in our report on internal control issued pursuant to the Uniform Guidance.

An audit is not designed to provide assurance on internal control or to identify significant deficiencies or material weaknesses. Accordingly, we will express no such opinion. However, during the audit, we will communicate to management and those charged with governance internal control related matters that are required to be communicated under AICPA professional standards, *Government Auditing Standards*, and the Uniform Guidance.

Audit Procedures – Compliance

As part of obtaining reasonable assurance about whether the financial statements are free of material misstatement, we will perform tests of Schuyler Community Schools' compliance with provisions of applicable laws, regulations, contracts, and agreements, including grant agreements. However, the

objective of those procedures will not be to provide an opinion on overall compliance and we will not express such an opinion in our report on compliance issued pursuant to *Government Auditing Standards.*

The Uniform Guidance requires that we also plan and perform the audit to obtain reasonable assurance about whether the auditee has complied with federal statutes, regulations, and the terms and conditions of federal awards applicable to major programs. Our procedures will consist of tests of transactions and other applicable procedures described in the *OMB Compliance Supplement* for the types of compliance requirements that could have a direct and material effect on each of Schuyler Community Schools' major programs. The purpose of these procedures will be to express an opinion on Schuyler Community Schools' compliance with requirements applicable to each of its major programs in our report on compliance issued pursuant to the Uniform Guidance.

Other Services

We will also assist in preparing the financial statements, schedule of expenditures of federal awards, and related notes of Schuyler Community Schools in conformity with the modified cash basis of accounting and the Uniform Guidance based on information provided by you. These nonaudit services do not constitute an audit under *Government Auditing Standards* and such services will not be conducted in accordance with *Government Auditing Standards*. We will perform the services in accordance with applicable professional standards. The other services are limited to the financial statements, schedule of expenditures of federal awards, and related notes services previously defined. We, in our sole professional judgement, reserve the right to refuse to perform any procedure or take any action that could be construed as assuming management responsibilities.

Management Responsibilities

Management is responsible for (1) designing, implementing, establishing, and maintaining effective internal controls relevant to the preparation and fair presentation of financial statements that are free from material misstatement, whether due to fraud or error, including internal controls over federal awards, and for evaluating and monitoring ongoing activities, to help ensure that appropriate goals and objectives are met; (2) following laws and regulations; (3) ensuring that there is reasonable assurance that government programs are administered in compliance with compliance requirements; and (4) ensuring that management and financial information is reliable and properly reported. Management is also responsible for implementing systems designed to achieve compliance with applicable laws, regulations, contracts, and grant agreements. You are also responsible for the selection and application of accounting principles; for the preparation and fair presentation of the financial statements, schedule of expenditures of federal awards, and all accompanying information in conformity with the modified cash basis of accounting; and for compliance with applicable laws and regulations (including federal statutes) and the provisions of contracts and grant agreements (including award agreements). Your responsibilities also include identifying significant contractor relationships in which the contractor has responsibility for program compliance and for the accuracy and completeness of that information.

You are responsible for including all informative disclosures that are appropriate for the modified cash basis of accounting. Those disclosures will include (1) a description of the modified cash basis of accounting, including a summary of significant accounting policies, and how the modified cash basis of accounting differs from GAAP; (2) informative disclosures similar to those required by GAAP; and (3) additional disclosures beyond those specifically required that may be necessary for the financial statements to achieve fair presentation.

Management is also responsible for making all financial records and related information available to us and for the accuracy and completeness of that information. You are also responsible for providing us with (1) access to all information of which you are aware that is relevant to the preparation and fair presentation of the financial statements, (2) access to personnel, accounts, books, records, supporting documentation, and other information as needed to perform an audit under the Uniform Guidance, (3)

additional information that we may request for the purpose of the audit, and (4) unrestricted access to persons within the District from whom we determine it necessary to obtain audit evidence.

Your responsibilities include adjusting the financial statements to correct material misstatements and confirming to us in the management representation letter that the effects of any uncorrected misstatements aggregated by us during the current engagement and pertaining to the latest period presented are immaterial, both individually and in the aggregate, to the financial statements as a whole.

You are responsible for the design and implementation of programs and controls to prevent and detect fraud, and for informing us about all known or suspected fraud affecting the School District involving (1) management, (2) employees who have significant roles in internal control, and (3) others where the fraud could have a material effect on the financial statements. Your responsibilities include informing us of your knowledge of any allegations of fraud or suspected fraud affecting the District received in communications from employees, former employees, grantors, regulators, or others. In addition, you are responsible for identifying and ensuring that the District complies with applicable laws, regulations, contracts, agreements, and grants. Management is also responsible for taking timely and appropriate steps to remedy fraud and noncompliance with provisions of laws, regulations, contracts, and grant agreements, or abuse that we report. Additionally, as required by the Uniform Guidance, it is management's responsibility to evaluate and monitor noncompliance with federal statutes, regulations, and the terms and conditions of federal awards; take prompt action when instances of noncompliance are identified including noncompliance identified in audit findings; promptly follow up and take corrective action on reported audit findings; and prepare a summary schedule of prior audit findings and a separate corrective action plan. The summary schedule of prior audit findings should be available for our review on September 30, 2020.

With regard to using auditor's report, you understand that you must obtain our prior written consent to reproduce or use our report in bond offering official statements or other documents.

You are responsible for identifying all federal awards received and understanding and complying with the compliance requirements and for the preparation of the schedule of expenditures of federal awards (including notes and noncash assistance received) in conformity with the Uniform Guidance. You agree to include our report on the schedule of expenditures of federal awards in any document that contains and indicates that we have reported on the schedule of expenditures of federal awards. You also agree to include the audited financial statements with any presentation of the schedule of expenditures of federal awards that includes our report thereon. Your responsibilities include acknowledging to us in the written representation letter that (1) you are responsible for presentation of the schedule of expenditures of federal awards in accordance with the Uniform Guidance; (2) you believe the schedule of expenditures of federal awards, including its form and content, is stated fairly in accordance with the Uniform Guidance; (3) the methods of measurement or presentation have not changed from those used in the prior period (or, if they have changed, the reasons for such changes); and (4) you have disclosed to us any significant assumptions or interpretations underlying the measurement or presentation of the schedule of expenditures of federal awards.

You are also responsible for the preparation of the other supplementary information, which we have been engaged to report on, in conformity with the modified cash basis of accounting. You agree to include our report on the supplementary information in any document that contains, and indicates that we have reported on the supplementary information. You also agree to include the audited financial statements with any presentation of the supplementary information that includes our report thereon. Your responsibilities include acknowledging to us in the written representation letter that (1) you are responsible for presentation of the supplementary information in accordance with the modified cash basis of accounting; (2) you believe the supplementary information, including its form and content, is fairly presented in accordance with the modified cash basis of accounting; (3) the methods of measurement or presentation have not changed from those used in the prior period (or, if they have changed, the reasons

for such changes); and (4) you have disclosed to us any significant assumptions or interpretations underlying the measurement or presentation of the supplementary information.

Management is responsible for establishing and maintaining a process for tracking the status of audit findings and recommendations. Management is also responsible for identifying and providing report copies of previous financial audits, attestation engagements, performance audits, or other studies related to the objectives discussed in the Audit Objectives section of this letter. This responsibility includes relaying to us corrective actions taken to address significant findings and recommendations resulting from those audits, attestation engagements, performance audits, or studies. You are also responsible for providing management's views on our current findings, conclusions, and recommendations, as well as your planned corrective actions, for the report, and for the timing and format for providing that information.

With regard to the electronic dissemination of audited financial statements, including financial statements published electronically on your website, you understand that electronic sites are a means to distribute information and, therefore, we are not required to read the information contained in these sites or to consider the consistency of other information in the electronic site with the original document.

You agree to assume all management responsibilities relating to the financial statements, schedule of expenditures of federal awards, and related notes, and any other nonaudit services we provide. You will be required to acknowledge in the management representation letter our assistance with preparation of the financial statements, schedule of expenditures of federal awards, and related notes and that you have reviewed and approved the financial statements, schedule of expenditures of federal awards, and related notes prior to their issuance and have accepted responsibility for them. Further, you agree to oversee the nonaudit services by designating an individual, preferably from senior management, with suitable skill, knowledge, or experience; evaluate the adequacy and results of those services; and accept responsibility for them.

Engagement Administration, Fees, and Other

We understand that your employees will prepare all cash or other confirmations we request and will locate any documents selected by us for testing.

At the conclusion of the engagement, we will complete the appropriate sections of the Data Collection Form that summarizes our audit findings. It is management's responsibility to electronically submit the reporting package (including financial statements, schedule of expenditures of federal awards, summary schedule of prior audit findings, auditor's reports, and corrective action plan) along with the Data Collection Form to the federal audit clearinghouse. We will coordinate with you the electronic submission and certification. The Data Collection Form and the reporting package must be submitted within the earlier of 30 calendar days after receipt of the auditors' reports or nine months after the end of the audit period.

We will provide copies of our reports to Schuyler Community Schools; however, management is responsible for distribution of the reports and the financial statements. Unless restricted by law or regulation, or containing privileged and confidential information, copies of our reports are to be made available for public inspection.

The audit documentation for this engagement is the property of Pekny & Associates, CPA's, PC and constitutes confidential information. However, subject to applicable laws and regulations, audit documentation and appropriate individuals will be made available upon request and in a timely manner to regulatory agencies providing direct or indirect funding, or the U.S. Government Accountability Office for purposes of a quality review of the audit, to resolve audit findings, or to carry out oversight responsibilities. We will notify you of any such request. If requested, access to such audit documentation will be provided under the supervision of Pekny & Associates, CPA's, PC personnel.

Furthermore, upon request, we may provide copies of selected audit documentation to the aforementioned parties. These parties may intend, or decide, to distribute the copies or information contained therein to others, including other governmental agencies.

The audit documentation for this engagement will be retained for a minimum of five years after the report release date or for any additional period requested by regulatory agencies. If we are aware that a federal awarding agency, pass-through entity, or auditee is contesting an audit finding, we will contact the party(ies) contesting the audit finding for guidance prior to destroying the audit documentation.

We expect to begin our audit in early September and to issue our reports no later than November 5, 2020, the Nebraska School District audit deadline. Jack Pekny is the engagement partner and is responsible for supervising the engagement and signing the reports or authorizing another individual to sign them.

Our fee for these services will be at our standard hourly rates plus out-of-pocket costs except that we agree that our gross fee will not exceed $16,600. Our standard hourly rates vary according to the degree of responsibility involved and the experience level of the personnel assigned to your audit. The above fee is based on anticipated cooperation from your personnel and the assumption that unexpected circumstances will not be encountered during the audit (i.e. the inclusion of component units). If significant additional time is necessary, we will discuss it with you and arrive at a new fee estimate before we incur the additional costs.

Any additional services performed, that are not included in the above quotation, such as the submission of the audit to the Municipal Securities Rulemaking Board (MSRB), assisting with the preparation of the Annual Financial Report (AFR), and the Agreed Upon Procedure for ADA/ADM Compliance Reporting, will be billed separately.

We appreciate the opportunity to be of service to Schuyler Community Schools, and believe this letter accurately summarizes the significant terms of our engagement. If you have any questions, please let us know. If you agree with the terms of our engagement as described in this letter, please sign the enclosed copy and return it to us.

Very truly yours,

Pekny & Associates, CPA's, PC

Pekny & Associates, CPA's, PC

RESPONSE:
This letter correctly sets forth the understanding of Schuyler Community Schools.

Management Signature: _____

Title: _____

Date: _____

Governance Signature: _____

Title: _____

Date: _____

PEKNY & ASSOCIATES, CPA'S, PC

2458 18th Avenue
Columbus, NE 68601
402-564-7138
FAX 402-564-7139

200 E. 12th Street
Schuyler, NE 68661
402-352-8898
FAX 402-352-8741

July 6, 2021

To the School Board of
Schuyler Community Schools
District No. 123, Colfax County

And

Dr. Dan Hoesing, Superintendent
Schuyler Community Schools

We are pleased to confirm our understanding of the services we are to provide to the Schuyler Community Schools, for the year ended August 31, 2021. We will audit the financial statements of the governmental activities, and each major fund, and the aggregate remaining fund information, including the notes to the financial statements, which collectively comprise the financial statements, of Schuyler Community Schools, as of and for the year ended August 31, 2021.

We have also been engaged to report on supplementary information other than RSI (Required Supplementary Information) that accompanies Schuyler Community Schools' financial statements. We will subject the following supplementary information to the auditing procedures applied in our audit of the financial statements and certain additional procedures, including comparing and reconciling such information directly to the underlying accounting and other records used to prepare the financial statements or to the financial statements themselves, and other additional procedures in accordance with auditing standards generally accepted in the United States of America, and we will provide an opinion on it in relation to the financial statements as a whole, in our report combined with our auditor's report on the financial statements:

1. Schedule of Expenditures of Federal Awards.
2. Combining Schedule of Assets and Fund Balance – Modified Cash Basis.
3. Combining Schedule of Receipts, Disbursements, and Changes in Fund Balance – Modified Cash Basis.
4. Management Discussion and Analysis

The following other information accompanying the financial statements will not be subjected to the auditing procedures applied in our audit of the financial statements, and our auditor's report will not provide an opinion or any assurance on that other information.

1. Budgetary Comparison Schedules.

Audit Objectives

The objective of our audit is the expression of opinions as to whether your financial statements are fairly presented, in all material respects, in conformity with the modified cash basis of accounting, and to report on the fairness of the supplementary information referred to in the second paragraph when considered in relation to the financial statements as a whole. The objective also includes reporting on—

- Internal control over financial reporting and compliance with the provisions of laws, regulations, contracts, and award agreements, noncompliance with which could have a material effect on the financial statements in accordance with *Government Auditing Standards*.

- Internal control over compliance related to major programs and an opinion (or disclaimer of opinion) on compliance with federal statutes, regulations, and the terms and conditions of federal awards that could have a direct and material effect on each major program in accordance with the Single Audit Act Amendments of 1996 and Title 2 U.S. *Code of Federal Regulations* (CFR) Part 200, *Uniform Administrative Requirements, Cost Principles, and Audit Requirements for Federal Awards* (Uniform Guidance).

The *Government Auditing Standards* report on internal control over financial reporting and on compliance and other matters will include a paragraph that states that (1) the purpose of the report is solely to describe the scope of testing of internal control and compliance and the results of that testing, and not to provide an opinion on the effectiveness of the District's internal control or on compliance, and (2) the report is an integral part of an audit performed in accordance with *Government Auditing Standards* in considering the entity's internal control and compliance. The Uniform Guidance report on internal control over compliance will include a paragraph that states that the purpose of the report on internal control over compliance is solely to describe the scope of testing of internal control over compliance and the results of that testing based on the requirements of the Uniform Guidance. Both reports will state that the report is not suitable for any other purpose.

Our audit will be conducted in accordance with auditing standards generally accepted in the United States of America; the standards for financial audits contained in *Government Auditing Standards,* issued by the Comptroller General of the United States; the Single Audit Act Amendments of 1996; and the provisions of the Uniform Guidance; and the guide to auditing and reporting for Nebraska School Districts issued by the Nebraska Department of Education, and will include tests of accounting records, a determination of major program(s) in accordance with the Uniform Guidance, and other procedures we consider necessary to enable us to express such opinions. We will issue written reports upon completion of our Single Audit. Our reports will be addressed to the Board of Education of Schuyler Community Schools. We cannot provide assurance that unmodified opinions will be expressed. Circumstances may arise in which it is necessary for us to modify our opinions or add emphasis-of-matter or other-matter paragraphs. If our opinions are other than unmodified, we will discuss the reasons with you in advance. If, for any reason, we are unable to complete the audit or are unable to form or have not formed opinions, we may decline to express opinions or issue reports, or we may withdraw from this engagement. If circumstances occur related to the condition of your records, the availability of sufficient, appropriate audit evidence, or the existence of a significant risk of material misstatement of the financial statements caused by error, fraudulent financial reporting, or misappropriation of assets, which in our professional judgement prevent us from completing the audit or forming an opinion on the financial statements, we retain the right to take any course of action permitted by professional standards, including declining to express an opinion or issue a report, or withdrawing from the engagement.

Audit Procedures – General

An audit includes examining, on a test basis, evidence supporting the amounts and disclosures in the financial statements; therefore, our audit will involve judgment about the number of transactions to be examined and the areas to be tested. An audit also includes evaluating the appropriateness of accounting policies used and the reasonableness of significant accounting estimates made by management, as well as evaluating the overall presentation of the financial statements. We will plan and perform the audit to obtain reasonable assurance about whether the financial statements are free of material misstatement, whether from (1) errors, (2) fraudulent financial reporting, (3) misappropriation of assets, or (4) violations of laws or governmental regulations that are attributable to the District or to acts by management or employees acting on behalf of the District. Because the determination of abuse is subjective, *Government Auditing Standards* do not expect auditors to provide reasonable assurance of detecting abuse.

Because of the inherent limitations of an audit, combined with the inherent limitations of internal control, and because we will not perform a detailed examination of all transactions, there is a risk that material misstatements or noncompliance may exist and not be detected by us, even though the audit is properly planned and performed in accordance with U.S. generally accepted auditing standards and *Government Auditing Standards.* In addition, an audit is not designed to detect immaterial misstatements or violations of laws or governmental regulations that do not have a direct and material effect on the financial statements or on major programs. However, we will inform the appropriate level of management of any material errors, any fraudulent financial reporting, or misappropriation of assets that come to our attention. We will also inform the appropriate level of management of any violations of laws or governmental regulations that come to our attention, unless clearly inconsequential, and of any material abuse that comes to our attention. We will include such matters in the reports required for a Single Audit. Our responsibility as auditors is limited to the period covered by our audit and does not extend to any later periods for which we are not engaged as auditors.

Our procedures will include tests of documentary evidence supporting the transactions recorded in the accounts, and may include tests of the physical existence of assets, and direct confirmation of certain other assets and liabilities by correspondence with selected individuals, funding sources, creditors, and financial institutions. We will request written representations from your attorneys as part of the engagement, and they may bill you for responding to this inquiry. At the conclusion of our audit, we will require certain written representations from you about your responsibilities for the financial statements; schedule of expenditures of federal awards; federal award programs; compliance with laws, regulations, contracts, and grant agreements; and other responsibilities required by general accepted auditing standards.

Audit Procedures – Internal Controls

Our audit will include obtaining an understanding of the District and its environment, including internal control, sufficient to assess the risks of material misstatement of the financial statements and to design the nature, timing, and extent of further audit procedures. Tests of controls may be performed to test the effectiveness of certain controls that we consider relevant to preventing and detecting errors and fraud that are material to the financial statements and to preventing and detecting misstatements resulting from illegal acts and other noncompliance matters that have a direct and material effect on the financial statements. Our tests, if performed, will be less in scope than would be necessary to render an opinion on internal control and, accordingly, no opinion will be expressed in our report on internal control issued pursuant to *Government Auditing Standards.*

As required by the Uniform Guidance, we will perform tests of controls over compliance to evaluate the effectiveness of the design and operation of controls that we consider relevant to preventing or detecting material noncompliance with compliance requirements applicable to each major federal award program. However, our tests will be less in scope than would be necessary to render an opinion on those controls and, accordingly, no opinion will be expressed in our report on internal control issued pursuant to the Uniform Guidance.

An audit is not designed to provide assurance on internal control or to identify significant deficiencies or material weaknesses. Accordingly, we will express no such opinion. However, during the audit, we will communicate to management and those charged with governance internal control related matters that are required to be communicated under AICPA professional standards, *Government Auditing Standards,* and the Uniform Guidance.

Audit Procedures – Compliance

As part of obtaining reasonable assurance about whether the financial statements are free of material misstatement, we will perform tests of Schuyler Community Schools' compliance with provisions of applicable laws, regulations, contracts, and agreements, including grant agreements. However, the

objective of those procedures will not be to provide an opinion on overall compliance and we will not express such an opinion in our report on compliance issued pursuant to *Government Auditing Standards.*

The Uniform Guidance requires that we also plan and perform the audit to obtain reasonable assurance about whether the auditee has complied with federal statutes, regulations, and the terms and conditions of federal awards applicable to major programs. Our procedures will consist of tests of transactions and other applicable procedures described in the *OMB Compliance Supplement* for the types of compliance requirements that could have a direct and material effect on each of Schuyler Community Schools' major programs. The purpose of these procedures will be to express an opinion on Schuyler Community Schools' compliance with requirements applicable to each of its major programs in our report on compliance issued pursuant to the Uniform Guidance.

Other Services

We will also assist in preparing the financial statements, schedule of expenditures of federal awards, and related notes of Schuyler Community Schools in conformity with the modified cash basis of accounting and the Uniform Guidance based on information provided by you. These nonaudit services do not constitute an audit under *Government Auditing Standards* and such services will not be conducted in accordance with *Government Auditing Standards*. We will perform the services in accordance with applicable professional standards. The other services are limited to the financial statements, schedule of expenditures of federal awards, and related notes services previously defined. We, in our sole professional judgement, reserve the right to refuse to perform any procedure or take any action that could be construed as assuming management responsibilities.

Management Responsibilities

Management is responsible for (1) designing, implementing, establishing, and maintaining effective internal controls relevant to the preparation and fair presentation of financial statements that are free from material misstatement, whether due to fraud or error, including internal controls over federal awards, and for evaluating and monitoring ongoing activities, to help ensure that appropriate goals and objectives are met; (2) following laws and regulations; (3) ensuring that there is reasonable assurance that government programs are administered in compliance with compliance requirements; and (4) ensuring that management and financial information is reliable and properly reported. Management is also responsible for implementing systems designed to achieve compliance with applicable laws, regulations, contracts, and grant agreements. You are also responsible for the selection and application of accounting principles; for the preparation and fair presentation of the financial statements, schedule of expenditures of federal awards, and all accompanying information in conformity with the modified cash basis of accounting; and for compliance with applicable laws and regulations (including federal statutes) and the provisions of contracts and grant agreements (including award agreements). Your responsibilities also include identifying significant contractor relationships in which the contractor has responsibility for program compliance and for the accuracy and completeness of that information.

You are responsible for including all informative disclosures that are appropriate for the modified cash basis of accounting. Those disclosures will include (1) a description of the modified cash basis of accounting, including a summary of significant accounting policies, and how the modified cash basis of accounting differs from GAAP; (2) informative disclosures similar to those required by GAAP; and (3) additional disclosures beyond those specifically required that may be necessary for the financial statements to achieve fair presentation.

Management is also responsible for making all financial records and related information available to us and for the accuracy and completeness of that information. You are also responsible for providing us with (1) access to all information of which you are aware that is relevant to the preparation and fair presentation of the financial statements, (2) access to personnel, accounts, books, records, supporting documentation, and other information as needed to perform an audit under the Uniform Guidance, (3) additional information

that we may request for the purpose of the audit, and (4) unrestricted access to persons within the District from whom we determine it necessary to obtain audit evidence.

Your responsibilities include adjusting the financial statements to correct material misstatements and confirming to us in the management representation letter that the effects of any uncorrected misstatements aggregated by us during the current engagement and pertaining to the latest period presented are immaterial, both individually and in the aggregate, to the financial statements as a whole.

You are responsible for the design and implementation of programs and controls to prevent and detect fraud, and for informing us about all known or suspected fraud affecting the School District involving (1) management, (2) employees who have significant roles in internal control, and (3) others where the fraud could have a material effect on the financial statements. Your responsibilities include informing us of your knowledge of any allegations of fraud or suspected fraud affecting the District received in communications from employees, former employees, grantors, regulators, or others. In addition, you are responsible for identifying and ensuring that the District complies with applicable laws, regulations, contracts, agreements, and grants. Management is also responsible for taking timely and appropriate steps to remedy fraud and noncompliance with provisions of laws, regulations, contracts, and grant agreements, or abuse that we report. Additionally, as required by the Uniform Guidance, it is management's responsibility to evaluate and monitor noncompliance with federal statutes, regulations, and the terms and conditions of federal awards; take prompt action when instances of noncompliance are identified including noncompliance identified in audit findings; promptly follow up and take corrective action on reported audit findings; and prepare a summary schedule of prior audit findings and a separate corrective action plan. The summary schedule of prior audit findings should be available for our review on September 30, 2021.

With regard to using auditor's report, you understand that you must obtain our prior written consent to reproduce or use our report in bond offering official statements or other documents.

You are responsible for identifying all federal awards received and understanding and complying with the compliance requirements and for the preparation of the schedule of expenditures of federal awards (including notes and noncash assistance received) in conformity with the Uniform Guidance. You agree to include our report on the schedule of expenditures of federal awards in any document that contains and indicates that we have reported on the schedule of expenditures of federal awards. You also agree to include the audited financial statements with any presentation of the schedule of expenditures of federal awards that includes our report thereon. Your responsibilities include acknowledging to us in the written representation letter that (1) you are responsible for presentation of the schedule of expenditures of federal awards in accordance with the Uniform Guidance; (2) you believe the schedule of expenditures of federal awards, including its form and content, is stated fairly in accordance with the Uniform Guidance; (3) the methods of measurement or presentation have not changed from those used in the prior period (or, if they have changed, the reasons for such changes); and (4) you have disclosed to us any significant assumptions or interpretations underlying the measurement or presentation of the schedule of expenditures of federal awards.

You are also responsible for the preparation of the other supplementary information, which we have been engaged to report on, in conformity with the modified cash basis of accounting. You agree to include our report on the supplementary information in any document that contains, and indicates that we have reported on the supplementary information. You also agree to include the audited financial statements with any presentation of the supplementary information that includes our report thereon. Your responsibilities include acknowledging to us in the written representation letter that (1) you are responsible for presentation of the supplementary information in accordance with the modified cash basis of accounting; (2) you believe the supplementary information, including its form and content, is fairly presented in accordance with the modified cash basis of accounting; (3) the methods of measurement or presentation have not changed from those used in the prior period (or, if they have changed, the reasons for such changes); and (4) you have disclosed to us any significant assumptions or interpretations underlying the measurement or presentation of the supplementary information.

Management is responsible for establishing and maintaining a process for tracking the status of audit findings and recommendations. Management is also responsible for identifying and providing report copies of previous financial audits, attestation engagements, performance audits, or other studies related to the objectives discussed in the Audit Objectives section of this letter. This responsibility includes relaying to us corrective actions taken to address significant findings and recommendations resulting from those audits, attestation engagements, performance audits, or studies. You are also responsible for providing management's views on our current findings, conclusions, and recommendations, as well as your planned corrective actions, for the report, and for the timing and format for providing that information.

With regard to the electronic dissemination of audited financial statements, including financial statements published electronically on your website, you understand that electronic sites are a means to distribute information and, therefore, we are not required to read the information contained in these sites or to consider the consistency of other information in the electronic site with the original document.

You agree to assume all management responsibilities relating to the financial statements, schedule of expenditures of federal awards, and related notes, and any other nonaudit services we provide. You will be required to acknowledge in the management representation letter our assistance with preparation of the financial statements, schedule of expenditures of federal awards, and related notes and that you have reviewed and approved the financial statements, schedule of expenditures of federal awards, and related notes prior to their issuance and have accepted responsibility for them. Further, you agree to oversee the nonaudit services by designating an individual, preferably from senior management, with suitable skill, knowledge, or experience; evaluate the adequacy and results of those services; and accept responsibility for them.

Engagement Administration, Fees, and Other

We understand that your employees will prepare all cash or other confirmations we request and will locate any documents selected by us for testing.

At the conclusion of the engagement, we will complete the appropriate sections of the Data Collection Form that summarizes our audit findings. It is management's responsibility to electronically submit the reporting package (including financial statements, schedule of expenditures of federal awards, summary schedule of prior audit findings, auditor's reports, and corrective action plan) along with the Data Collection Form to the federal audit clearinghouse. We will coordinate with you the electronic submission and certification. The Data Collection Form and the reporting package must be submitted within the earlier of 30 calendar days after receipt of the auditors' reports or nine months after the end of the audit period.

We will provide copies of our reports to Schuyler Community Schools; however, management is responsible for distribution of the reports and the financial statements. Unless restricted by law or regulation, or containing privileged and confidential information, copies of our reports are to be made available for public inspection.

The audit documentation for this engagement is the property of Pekny & Associates, CPA's, PC and constitutes confidential information. However, subject to applicable laws and regulations, audit documentation and appropriate individuals will be made available upon request and in a timely manner to regulatory agencies providing direct or indirect funding, or the U.S. Government Accountability Office for purposes of a quality review of the audit, to resolve audit findings, or to carry out oversight responsibilities. We will notify you of any such request. If requested, access to such audit documentation will be provided under the supervision of Pekny & Associates, CPA's, PC personnel. Furthermore, upon request, we may provide copies of selected audit documentation to the aforementioned parties. These parties may intend, or decide, to distribute the copies or information contained therein to others, including other governmental agencies.

The audit documentation for this engagement will be retained for a minimum of five years after the report release date or for any additional period requested by regulatory agencies. If we are aware that a federal awarding agency, pass-through entity, or auditee is contesting an audit finding, we will contact the party(ies) contesting the audit finding for guidance prior to destroying the audit documentation.

We expect to begin our audit in early September and to issue our reports no later than November 5, 2020, the Nebraska School District audit deadline. Jack Pekny is the engagement partner and is responsible for supervising the engagement and signing the reports or authorizing another individual to sign them.

Our fee for these services will be at our standard hourly rates plus out-of-pocket costs except that we agree that our gross fee will not exceed $18,000**.** Our standard hourly rates vary according to the degree of responsibility involved and the experience level of the personnel assigned to your audit. The above fee is based on anticipated cooperation from your personnel and the assumption that unexpected circumstances will not be encountered during the audit (i.e. the inclusion of component units and extra Covid-19 paperwork). If significant additional time is necessary, we will discuss it with you and arrive at a new fee estimate before we incur the additional costs.

Any additional services performed, that are not included in the above quotation, such as the submission of the audit to the Municipal Securities Rulemaking Board (MSRB), assisting with the preparation of the Annual Financial Report (AFR), and the Agreed Upon Procedure for ADA/ADM Compliance Reporting, will be billed separately.

We appreciate the opportunity to be of service to Schuyler Community Schools, and believe this letter accurately summarizes the significant terms of our engagement. If you have any questions, please let us know. If you agree with the terms of our engagement as described in this letter, please sign the enclosed copy and return it to us.

Very truly yours,

Pekny & Associates, CPA's, PC

Pekny & Associates, CPA's, PC

RESPONSE:
This letter correctly sets forth the understanding of Schuyler Community Schools.

Management Signature: _____

Title: _____

Date: _____

Governance Signature: _____

Title: _____

Date: _____

14 junio 2021

Yo Maria Oviedo por medio de esta carta quiero comunicarles que por motivos de salud no puedo seguir trabajando en La escuela primaria de schuyler, NE y renuncio a mi cargo de cocinera.
Gracias por la oportunidad que me dieron y espero en un futuro que me sienta mejor volver a trabajar con ustedes

Atentamente: Maria Oviedo
Maria O. Oviedo

I Maria Oviedo by means of this letter want to inform you that for health reasons I cannot continue working in the elementary school of Schuyler, NE and I resign my position as cook.
Thank you for the opportunity you gave me and I hope in the future that I feel better to work with you again.

June 14, 2021

I Jennifer Corbett quit

Schuyler Community Schools

effective immediatley

Jennifer Corbett

I Danielle M Orozco
is Resigning from my
Position at SES effective
Immediately

7-2-21

Danielle M Orozco

A Plan for Safe Return to In-Person Instruction and Continuity of Services

Pursuant to the Federal American Rescue Plan Act, Section 2001(i) – ESSER III

Introduction and Background

On March 11, 2021, President Biden signed the American Rescue Plan (ARP) Act of 2021, Public Law 117-2. The ARP Act includes nearly $122 billion for the Elementary and Secondary School Emergency Relief (ESSER III) Fund that allows state and local education agencies (LEAs) to take additional steps for continued safe in-person instruction and to address unfinished teaching and learning to mitigate the COVID-19 pandemic.

These resources will allow school districts to take additional measures to safely sustain their healthy operations, this includes using funds to enact appropriate measures to help schools to invest in mitigation strategies consistent with the Centers for Disease Control and Prevention's (CDC) Operational Strategy for K-12 Schools to the greatest extent practicable; address the many impacts of COVID-19 on students, including unfinished instruction; implement strategies to meet students' social, emotional, mental health, and academic needs; offer crucial summer, afterschool, and other extended learning and enrichment programs; support early childhood education; invest in staff capacity; and avoid devastating layoffs at this critical moment, ensuring that all students have access to teachers, counselors, and other school personnel to support their needs.

Section 2001(i)(1) of the ARP Act requires each LEA that receives ARP ESSER funds to develop and make publicly available on the LEA's website, no later than 30 days after receiving ARP ESSER funds, a plan for the safe return to in-person instruction and continuity of services for all schools (Safe Return Plan) A Safe Return Plan is required of all fund recipients, including those that have already returned to in-person instruction. Section 2001(i)(2) of the ARP Act further requires that the LEA seek public comment on the Safe Return Plan and take those comments into account in finalization of the Safe Return Plan.

Previous Plan - Section 2001(i)(3) of the ARP Act states provides that if a LEA has developed a Safe Return Plan before the date of enactment of the ARP Act that meets the requirement in paragraphs Section 2001(i)(1) and (2), such plan shall be deemed to satisfy the requirements of this subsection.

Plan Revisions - Effective April 22, 2021, under the interim final requirements published in Volume 86, No. 76 of the Federal Register by the U.S. Department of Education (USDE), clarifies how an LEA must meet the statutory requirement to develop a Safe Return Plan. An LEA must periodically, but no less frequently than every six months through September 30, 2023*, review (taking into consideration the timing of significant changes to CDC guidance on reopening schools) and, as appropriate, revise its Safe Return Plan. **If an LEA developed a plan prior to enactment of the ARP Act** that meets the statutory requirements under sections 2001(i)(1) and (2) of the ARP Act **but does not address all the safety recommendations established by the CDC**, the LEA must, revise to address such element and post its plan no later than six months after receiving its ARP ESSER funds to meet the statutory requirement. Revisions should be made publicly available on the LEAs website.

Understandable and Uniform Format – An LEA's Safe Return Plan must be – (i) In an understandable and format; To the extent practicable, written in a language that parents can understand or, if it is not practicable to provide written translations to a parent with limited English proficiency, be orally translated for such parent; and (iii) Upon request by a parent who is an individual with a disability as defined by the ADA, provided in an alternative format accessible to that parent.

Document Retention for Programmatic Monitoring - An LEA will maintain documentation locally. The Nebraska Department of Education (NDE), Office of ESEA Programs will monitor Safe Return Plans for the above requirements. The LEA should keep records of the following: staff involved in writing the plan, general comments received about the plan, original and changes to the plan, policies referenced within the plan, and screenshots of where the plan is posted on the website.

Pursuant to those requirements and the Nebraska Department of Education will be issuing subrecipient Grant Award Notifications on June 15, a District must post on their website their Safe Return Plans by July 15, 2021 which sought public comment and took those comments into account in the development of that plan.

To assist districts with the development of their Safe Return Plans, the NDE is providing the following worksheet.

---

*ARP ESSER funds are subject to the Tydings amendment and are therefore available to LEAs for obligation through September 30, 2024. Review and revisions, if necessary, are not required during the Tydings period

WORKSHEET: A Plan for Safe Return to In-Person Instruction and Continuity of Services

Pursuant to the Federal American Rescue Plan Act, Section 2001(i) – ESSER III

District Name:

Date: **Dates Revised:**

Maintaining Health and Safety

Mitigation strategies listed below (a-i) are required in the District's plan. By checking the box before each item, the district is agreeing to include information in their local plan to address the component listed.

- ☐ a) Universal and correct wearing of masks
- ☐ b) Modifying facilities to allow for physical distancing (e.g., including use of cohorts/podding)
- ☐ c) Handwashing and respiratory etiquette
- ☐ d) Cleaning and maintaining healthy facilities, including improving ventilation
- ☐ e) Contact tracing in combination with isolation and quarantine, in collaboration with the State, local, territorial, or Tribal health departments
- ☐ f) Diagnostic and screening testing
- ☐ g) Efforts to provide vaccinations to school communities
- ☐ h) Appropriate accommodations for children with disabilities with respect to the health and safety policies
- ☐ i) Coordination with State and local health officials. Including the needs for support and technical assistance to implement strategies consistent to the greatest extent practicable, with relevant CDC guidance. Operational Strategy for K-12 Schools through Phased Prevention | CDC

Ensuring Continuity of Services

Describe how the disctrict will ensure continuity of services, including but not limited to services to address students' academic needs and students' and staff's social, emotional, mental health, and other needs, which may include student health and food services.

Public Comment Requirements

Describe how the district sought public comment on its plan or plan revisions, and how it took those public comments into account in the development of its plan. Note, the ARP Act requires that the district seeks public comment for each six-month revision or revisions due to significant changes to CDC guidance.

Describe how the district ensured that the plan is in an understandable and uniform format; is to the extent practicable written in a language that parents can understand or, if not practicable to provide written translations to a parent with limited English proficiency, will be orally translated for such a parent; and upon request by a parent who is an individual with a disability as defined by the ADA, will be provided in an alternative format accessible to that parent.

7/12/2021					
TRANSFERS WITHIN THE DISTRICT					
Last Name	**First Name**	**Transferring School Year**	**Date Transfer Requested**	**Grade Entering**	**SCS Resident School Building**
OPTIONS OUT / IN Last Name	**First Name**	**Option School Year**	**Date Transfer Requested**	**Grade Entering**	**Resident District**
CANCELED OPTIONS					
Last Name	**First Name**	**Option School Year**	**Date canceled**		**Resident District**
Kluck	Aidan	2012/2013	5/15/2021		SCS/ Richland
Windedahl	Brooke	2013/2014	5/15/2021		SCS
Eaton	Samantha	2010/1011	5/15/2021		SCS
Rice	Cody	2015/2016	5/16/2021		Lakeview

SCS Transfering to Building
Option district
Option district
David City Public (Graduated)
David City Public (Graduated)
David City Public (Graduated)
SCS/SCHS