Board of Education Special Meeting
Tuesday, June 20, 2017 12:00 PM

Conference Room
520 East 9th Street
Imperial, NE 69033

# Agenda

I. Call to Order
II. Declaration of Open Meeting
III. Pledge of Allegiance
IV. Approval of Agenda
V. Reports
    1. Superintendent
VI. Public Comment
VII. Action Items
    1. Take all necessary action to approve or reject the bid from C&S Construction for $565,850.
    2. Take all necessary action to approve an auction for the Wellington site with the option of a potential lease agreement for the bus barn.
VIII. Adjourn

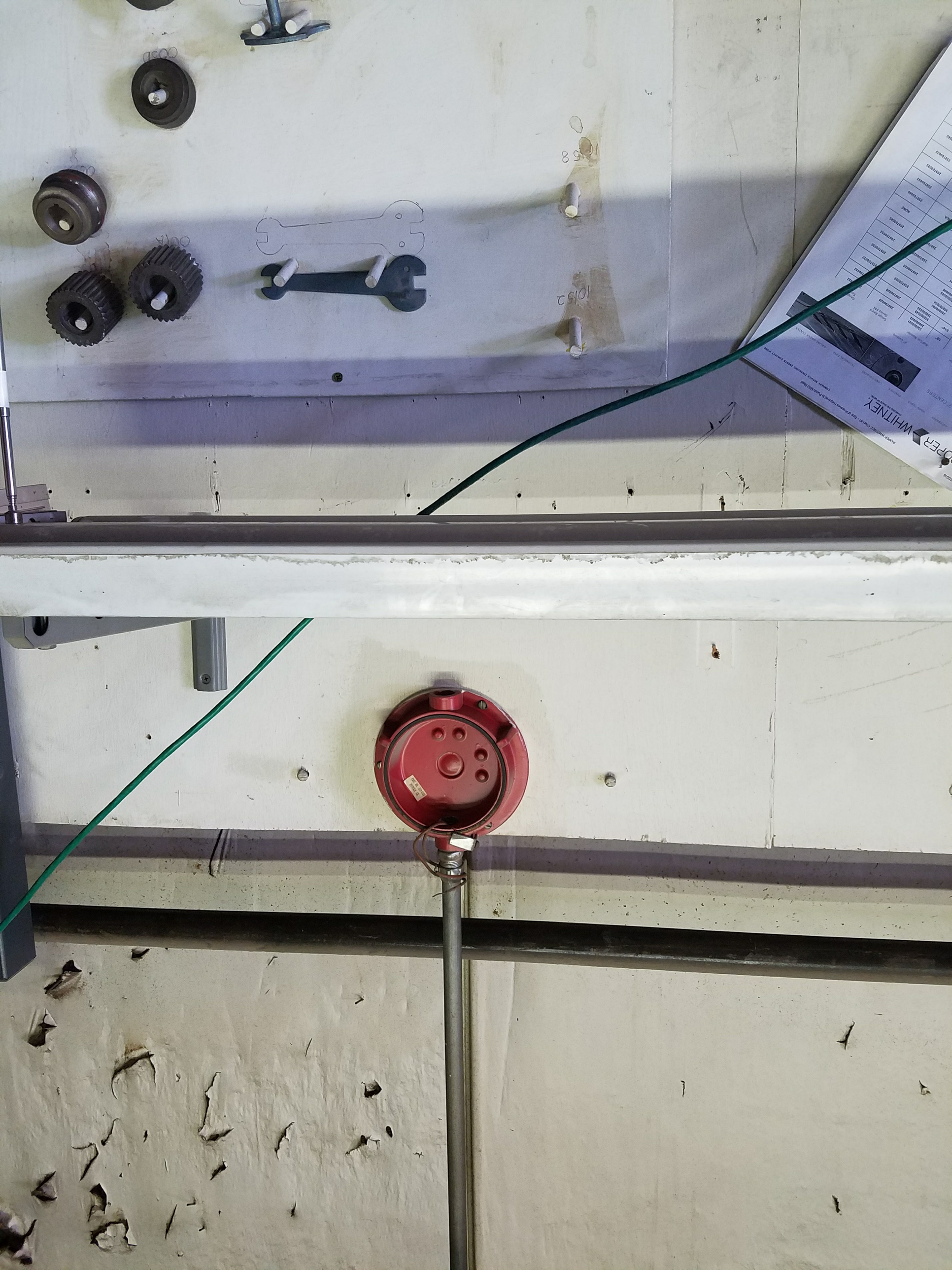
WHITNEY

Louisville
DEWALT

ACURITE

SCHOOL DISTRICT

SCHOOL BUS

BLUE BIRD
AHEAD

53078
WHEN RUNNING
WHEN STOP AT RR CROSSINGS

STOP AHEAD
SCHOOL BUS
UNLAWFUL TO PASS WHEN RED LIGHTS FLASH
SCHOOL BUS
UNLAWFUL TO PASS WHEN RED LIGHTS FLASH
SCHOOL BUS
EMERGENCY DOOR
UNLAWFUL TO PASS WHEN RED LIGHTS FLASH
707
NEBRASKA CENTRAL
Blue Bird

Blue Bird

SCHOOL BUS

Brad cell 4
Melissa

Universal
FRAGILE

PO# SAMPLE

FRENO DE DISCO
FRITEC
MD 1032

ARROW SEED COMPANY, INC.

NO
PARKING

INSTRUCTIONS
A
B
C
① HOLD UPRIGHT. PULL RING PIN.
② START BACK 10 FEET AIM AT BASE OF FIRE.
③ SQUEEZE LEVER. SWEEP SIDE TO SIDE.

SCHOOL BUS
EMERGENCY EXIT

Engineering International

# Chase County Schools
# New Bus Barn
# Bid Opening Record

10:00 A. M. MDT, Monday, 8 May 2017

Contact: Jeff Tidyman
402 Norris Ave, Ste 203
McCook, NE 69001
JTidyman@EngineeringInternational.US
(308) 340-5963

| Contractor | Add'a Rec'd? | Bid Bond Enclosed? | Lump Sum Bid 70'x96' | Lump Sum Bid 70'x110' |
|---|---|---|---|---|
| **C&S Construction**<br>Madrid, NE | Yes | Yes | $516,600 | $565,850 |
| **Imperial Contracting**<br>Imperial, NE | --- | --- | --- | --- |
| **Rockwell Construction**<br>Wray, CO | Yes | Yes | $651,215 | $726,214 |
| **Reichert Insulation and Construction**<br>Scottsbluff, NE | Yes | Yes | $872,283 | $933,401 |
| **Anderson Construction**<br>Scottsbluff, NE | --- | --- | --- | --- |

Signed: J. Tidyman Date: 8 MAY 2017

DOCUMENT 00 41 13 - BID FORM

1.1 BID INFORMATION

A. Bidder: Rockwell Construction Corporation.

B. Project Name: School Bus Barn

C. Project Location: Imperial, Nebraska

D. Owner: Chase County Schools

E. Engineer: Engineering International, 402 Norris Ave, Suite 203, McCook, NE 69001

1.2 CERTIFICATIONS AND BASE BID

A. Base Bid, Single-Prime (All Trades) Contract: The undersigned Bidder, having carefully examined the Procurement and Contracting Requirements, Conditions of the Contract, Drawings, Specifications, and all subsequent Addenda, as prepared by Engineering International, having visited the site, and being familiar with all conditions and requirements of the Work, hereby agrees to furnish all material, labor, equipment and services, including all scheduled allowances, necessary to complete the construction of the above-named project, according to the requirements of the Procurement and Contracting Documents, for the stipulated sum of:

**Option 1:** A 70' X 96' pre-engineered metal building, unsprinkled, with 2-hour fire wall, 90 minute doors, rolling-coil door on storage room. Outdoor electrical hook-ups for route buses, outdoor wash pad, 2 bays for activity buses, one maintenance bay, break room, restrooms, mech room and enclosed mezzanine storage. By-pass girts, 1.5:12 ~~standing seam room~~ screw down roof, 18' eave. See plans for details.

Option 1 Base Bid: Six hundred fifty one thousand, two hundred fifteen Dollars ($ 651, 215 ^00).

**Option 2:** A 70' X 110' pre-engineered metal building, similar to Option 1 with the following notable differences: 3 bays for activity buses, full coverage fire sprinkler, no fire wall, unenclosed mezzanine, no rolling coil door on the storage area. See plans for details.

Option 2 Base Bid: Seven hundred twenty six thousand, two hundred fourteen Dollars ($ 726, 214 ^00).

1.3 BID GUARANTEE

A. The undersigned Bidder agrees to execute a contract for this Work in the above amount and to furnish surety as specified within 10 days after a written Notice of Award, if offered within 60 days after receipt of bids, and on failure to do so agrees to forfeit to Owner the attached cash, cashier's check, certified check, U.S. money order, or bid bond, as liquidated damages for such failure, in the following amount constituting five percent (5%) of the Base Bid amount above:

1. Thirty six thousand, three hundred eleven Dollars ($ 36, 311 ^00).

B. In the event Owner does not offer Notice of Award within the time limits stated above, Owner will return to the undersigned the cash, cashier's check, certified check, U.S. money order, or bid bond.

1.4 TIME OF COMPLETION AND LIQUIDATED DAMAGES

A. Notice of Intent to Award shall be issued within 45 days of receipt of bids. Notice to Proceed shall be issued within 10 days after Bonds, Insurance, and all Contract documents have been received from the Successful Bidder. Said Bidder shall begin the Work on receipt of the Notice to Proceed and shall complete the Work on or before January 1, 2018. Work is subject to liquidated damages of $50 per work day for work not completed within the Contract Time.

1.5 SUBCONTRACTORS AND SUPPLIERS

A. The following companies shall execute subcontracts for the portions of the Work indicated:
1. ~~Flooring:~~ Concrete: BTE Concrete Construction.
2. Carpentry: Rockwell Construction.
3. Electrical Work: Potts Electric LLC.
4. Painting and Finishes: Rockwell Construction.
5. Plumbing: Morland Enterprises LLC.
6. Sprinkler Installation (Option 2 only): NE. Fire Sprinkler Corporation.
7. Other Work: _____.

1.6 ACKNOWLEDGEMENT OF ADDENDA

A. The undersigned Bidder acknowledges receipt of and use of the following Addenda in the preparation of this Bid:

1. Addendum No. 1, dated 5/2/2017.
2. Addendum No. 2, dated 5/4/2017.
3. Addendum No. 3, dated 5/4/2017.

1.7 CONTRACTOR'S LICENSE

A. The undersigned further states that it, or the appropriate subcontractor is a duly licensed contractor, for the type of work proposed, in Chase County, NE. All fees, permits, etc., pursuant to submitting this proposal have been paid in full.

1.8 SUBMISSION OF BID

A. Respectfully submitted this 8th day of May, 2017.

B. Submitted By: Rockwell Construction Corp.
*(Name of Bidding Firm or Corporation.)*

C. Authorized Signature: Randy Rockwell
*(Handwritten signature).*

D. Signed By: Randy Rockwell
*(Type or print name).*

E. Title: President
*(Owner/Partner/President/Vice President).*

F. Attest: Lynette Rockwell
*(Handwritten signature).*

G. By: Lynette Rockwell
*(Type or print name).*

H. Title: Corp Sec/Treas.
*(Corporate Secretary or Assistant Secretary).*

I. Street Address: 323 Main Street.

J. City, State, Zip: Wray, Co. 80758.

K. Phone: 970-332-4797.

L. Federal ID No.: 45-0517047

*(Affix Corporate Seal Here).*

END OF DOCUMENT 00 41 13

# *ROCKWELL CONSTRUCTION*

**323 MAIN ST. ~ WRAY, CO. 80758**
**Phone 970-332-4797 ~ Fax 970-332-4771**


May 7, 2017

To: Chase County Schools
Attention: Joey Lefdal, Jeff Tidyman
Re: School Bus Barn

Items for Your Consideration and Clarification

- Payment and Performance Bond: The issued Bid Bond is verification of our ability to provide the payment and performance bond with CHS Surety.
- Upon the award of the contract in our favor we will present insurances in the amounts listed.
- Builder's Risk was not requested for this project but a policy would cost between $2,150.00 and $2,400.00 if you would like to add this protection.
- We have enlisted the services of Twin Rivers Testing & Environmental, Inc. to do soils analysis for this project.
- The foundation insulation will be 2" rigid foundation rated insulation placed in a 2' width around the perimeter of the building.
- The floor trusses for the mezzanine will be bottom chord bearing on both ends of the truss. The west end remains as drawn. The east end will be on a 2"x 4" wall on the inside of the girt line to carry the load. The studs would be on 16" centers with a 1"x 4" let in at the mid-point. The wall would have the same liner paneling attached at top, bottom and middle points. The use of the stud wall over the beams would amount to a savings of $1,980.00.
- The kitchen cabinets will be Merillat Seneca Ridge Square Oak. These solidly constructed cabinets are made in America unlike the Chinese made cabinets from some larger box outlets.
- Two coats of CCI Super Seal 2000 will be applied to the concrete floors. The first coat will be applied right after the concrete is finished to provide a moisture retention seal. The second coat will be applied when the building is nearing completion, for a final finish.

Thanks for the opportunity to bid your project.

Respectfully,

Randy Rockwell


Randy Rockwell
Rockwell Construction Corporation
323 Main St.
Wray, CO 80758

Bond No. SUR40013766

## BID BOND

KNOW ALL BY THESE PRESENTS, That we, **Rockwell Construction Corporation**

of **Wray, CO**

(hereinafter called the Principal), as Principal, and

**Ironshore Indemnity, Inc.** (hereinafter called the Surety),

as Surety, are held and firmly bound unto **Chase County Schools**

(hereinafter called the Obligee) in the penal sum of **Five Percent of the Greatest Amount Bid**

Dollars ($ **5% G.A.B.** )

for the payment of which the Principal and the Surety bind themselves, their heirs, executors, administrators, successors and assigns, jointly and severally, firmly by these presents.

THE CONDITION OF THIS OBLIGATION IS SUCH, That WHEREAS, the Principal has submitted or is about to submit a proposal to the Obligee on a contract for

**School Bus Barn - New Metal Building.**

NOW, THEREFORE, If the said Contract be timely awarded to the Principal and the Principal shall, within such time as may be specified, enter into the Contract in writing, and give bond, if bond is required, with surety acceptable to the Obligee for the faithful performance of the said Contract, then this obligation shall be void; otherwise to remain in full force and effect.

Signed and sealed this **3rd** day of **May**, **2017**.

**Rockwell Construction Corporation**
Principal

Bradley P. Rockwell
Witness

By: Rady Rockwell President
Title

**Ironshore Indemnity, Inc.**

By Keith M Illa
**Keith M Illa, Attorney-in-Fact**

Ironshore Indemnity Inc. CORPORATE SEAL 1919 MINNESOTA

# POWER OF ATTORNEY

III-

## Ironshore Indemnity Inc.

KNOW ALL MEN BY THESE PRESENTS, that IRONSHORE INDEMNITY INC., a Minnesota Corporation, with its principal office in New York, NY does hereby constitute and appoint: Scott D. Chapman, Misty Witt, Rosalyn Hassell, Elaine Lewis, Keith M. Illa, Timothy James Maley, Cheryl R. Colson its true and lawful Attorney(s)-in-Fact to make, execute, seal, and deliver for, and on its behalf as surety, any and all bonds, undertakings or other writings obligatory in nature of a bond.

This authority is made under and by the authority of a resolution which was passed by the Board of Directors of IRONSHORE INDEMNITY INC. on the 22nd day of April, 2013 as follows:

Resolved, that the Director of the Company is hereby authorized to appoint and empower any representative of the company or other person or persons as Attorney-In-Fact to execute on behalf of the Company any bonds, undertakings, policies, contracts of indemnity or other writings obligatory in nature of a bond not to exceed $2,500,000 dollars, which the Company might execute through its duly elected officers, and affix the seal of the Company thereto. Any said execution of such documents by an Attorney-In-Fact shall be as binding upon the Company as if they had been duly executed and acknowledged by the regularly elected officers of the Company. Any Attorney-In-Fact, so appointed, may be removed for good cause and the authority so granted may be revoked as specified in the Power of Attorney.

Resolved, that the signature of the Director and the seal of the Company may be affixed by facsimile on any power of attorney granted, and the signature of the Secretary, and the seal of the Company may be affixed by facsimile to any certificate of any such power and any such power or certificate bearing such facsimile signature and seal shall be valid and binding on the Company. Any such power so executed and sealed and certificate so executed and sealed shall, with respect to any bond of undertaking to which it is attached, continue to be valid and binding on the Company.

IN WITNESS THEREOF, IRONSHORE INDEMNITY INC. has caused this instrument to be signed by its Director, and its Corporate Seal to be affixed this 7th day of August, 2013

IRONSHORE INDEMNITY INC.

Ironshore Indemnity Inc. CORPORATE SEAL 1919 MINNESOTA

By: _____
Daniel L. Sussman
Director

**ACKNOWLEDGEMENT**

On this 7th Day of August, 2013, before me, personally came Daniel L. Sussman to me known, who being duly sworn, did depose and say that he is the Director of Ironshore Indemnity, Inc. , the corporation described in and which executed the above instrument; that he executed said instrument on behalf of the corporation by authority of his office under the By-laws of said corporation.

AMY TAYLOR STATE OF TENNESSEE NOTARY PUBLIC DAVIDSON COUNTY

AMY TAYLOR
Notary Public- State of Tennessee
Davidson County
My Commission Expires 07-08-19

BY _____
Amy Taylor
Notary Public

**CERTIFICATE**

I, the undersigned, Secretary of IRONSHORE INDEMNITY INC., a Minnesota Corporation, DO HEREBY CERTIFY that the original Power of Attorney of which the foregoing is a true and correct copy, is in full force and effect and has not been revoked, and the resolutions as set forth are now in force.

Signed and Sealed at this 3rd Day of May, 20 17

Ironshore Indemnity Inc. CORPORATE SEAL 1919 MINNESOTA

Ironshore Indemnity Inc. CORPORATE SEAL 1919 MINNESOTA

_____
Paul S. Giordano
Secretary

**"WARNING: Any person who knowingly and with intent to defraud any insurance company or other person, files and application for insurance or statement of claim containing any materially false information, or conceals for the purpose of misleading information concerning any fact material thereto, commits a fraudulent insurance act, which is a crime and subjects such person to criminal and civil penalties."**

DOCUMENT 00 41 13 - BID FORM

1.1 BID INFORMATION

A. Bidder: Eric Reichert Insulation & Construction, Inc.

B. Project Name: School Bus Barn

C. Project Location: Imperial, Nebraska

D. Owner: Chase County Schools

E. Engineer: Engineering International, 402 Norris Ave, Suite 203, McCook, NE 69001

1.2 CERTIFICATIONS AND BASE BID

A. Base Bid, Single-Prime (All Trades) Contract: The undersigned Bidder, having carefully examined the Procurement and Contracting Requirements, Conditions of the Contract, Drawings, Specifications, and all subsequent Addenda, as prepared by Engineering International, having visited the site, and being familiar with all conditions and requirements of the Work, hereby agrees to furnish all material, labor, equipment and services, including all scheduled allowances, necessary to complete the construction of the above-named project, according to the requirements of the Procurement and Contracting Documents, for the stipulated sum of:

**Option 1:** A 70' X 96' pre-engineered metal building, unsprinkled, with 2-hour fire wall, 90 minute doors, rolling-coil door on storage room. Outdoor electrical hook-ups for route buses, outdoor wash pad, 2 bays for activity buses, one maintenance bay, break room, restrooms, mech room and enclosed mezzanine storage. By-pass girts, 1.5:12 standing seam room, 18' eave. See plans for details.

Option 1 Base Bid: eight thousand seven hundred twenty two dollars eighty three cents Dollars ($ 8,722 83 ).

**Option 2:** A 70' X 110' pre-engineered metal building, similar to Option 1 with the following notable differences: 3 bays for activity buses, full coverage fire sprinkler, no fire wall, unenclosed mezzanine, no rolling coil door on the storage area. See plans for details.

Option 2 Base Bid: nine hundred thirty three thousand four hundred one dollars Dollars ($ 933,401.00 ).

1.3 BID GUARANTEE

A. The undersigned Bidder agrees to execute a contract for this Work in the above amount and to furnish surety as specified within 10 days after a written Notice of Award, if offered within 60 days after receipt of bids, and on failure to do so agrees to forfeit to Owner the attached cash, cashier's check, certified check, U.S. money order, or bid bond, as liquidated damages for such failure, in the following amount constituting five percent (5%) of the Base Bid amount above:

1. Bid Bond Dollars ($ 46,670.00 ).

D. Signed By: Eric Reichert
*(Type or print name).*

E. Title: Eric Reichert
*(Owner/Partner/President/Vice President).*

F. Attest: Katie Pierce
*(Handwritten signature).*

G. By: Katie Pierce
*(Type or print name).*

H. Title: Secretary
*(Corporate Secretary or Assistant Secretary).*

I. Street Address: 1502 19th Ave.

J. City, State, Zip: Scottsbluff, NE 69361.

K. Phone: (308) 633-3595.

L. Federal ID No.: 45-4068381

*(Affix Corporate Seal Here).*

END OF DOCUMENT 00 41 13

Bond No. Bid Bond

# BID BOND

The American Institute of Architects,
AIA Document No. A310 (February, 1970 Edition)

KNOW ALL MEN BY THESE PRESENTS, that we Eric Reichert Insulation & Construction, Inc.
1502 19th Avenue, Scottsbluff, NE 69361

as Principal hereinafter called the Principal, and Old Republic Surety Company
a corporation duly organized under the laws of the state of Wisconsin as Surety, hereinafter called the Surety, are held and firmly bound unto Chase County School, 520 East 9th St, Imperial, NE 69033

as Obligee, hereinafter called the Obligee, in the sum of 5% of the Bid

Dollars ($ 5% of Bid ), for the payment of which sum well and truly to be made, the said Principal and the said Surety, bind ourselves, our heirs, executors, administrators, successors and assigns, jointly and severally, firmly by these presents.

WHEREAS, the Principal has submitted a bid for New bus barn building

NOW, THEREFORE, if the Obligee shall accept the bid of the Principal and the Principal shall enter into a Contract with the Obligee in accordance with the terms of such bid, and give such bond or bonds as may be specified in the bidding or Contract Documents with good and sufficient surety for the faithful performance of such Contract and for the prompt payment of labor and material furnished in the prosecution thereof, or in the event of the failure of the Principal to enter such Contract and give such bond or bonds, if the Principal shall pay to the Obligee the difference not to exceed the penalty hereof between the amount specified in said bid and such larger amount for which the Obligee may in good faith contract with another party to perform the Work covered by said bid, then this obligation shall be null and void, otherwise to remain in full force and effect.

Signed and sealed this 4th day of May, 2017

Witness

Eric Reichert Insulation & Construction, Inc.
Principal (Seal)

By: Eric Reichert President
Name/Title

Old Republic Surety Company
Surety

OLD REPUBLIC SURETY COMPANY CORPORATE SEAL 1881

Witness

By: Brennan J. Malm
Attorney-in-Fact

ORSC 21328 (5/97)

# OLD REPUBLIC SURETY COMPANY

**POWER OF ATTORNEY**

KNOW ALL MEN BY THESE PRESENTS: That OLD REPUBLIC SURETY COMPANY, a Wisconsin stock insurance corporation, does make, constitute and appoint:

JOHN D. MASSEY, KIM D. HURST, JANET A. FREDERICK, ELIASAR M. KANNO, DEDRA R. WICK, BRENNAN JAY MALM, THOMAS J HORNE, OF SCOTTSBLUFF, NE

its true and lawful Attorney(s)-in-Fact, with full power and authority, not exceeding $50,000,000, for and on behalf of the company as surety, to execute and deliver and affix the seal of the company thereto (if a seal is required), bonds, undertakings, recognizances or other written obligations in the nature thereof, (other than bail bonds, bank depository bonds, mortgage deficiency bonds, mortgage guaranty bonds, guarantees of installment paper and note guaranty bonds, self-insurance workers compensation bonds guaranteeing payment of benefits, asbestos abatement contract bonds, waste management bonds, hazardous waste remediation bonds or black lung bonds), as follows:

ALL WRITTEN INSTRUMENTS IN AN AMOUNT NOT TO EXCEED
FIVE MILLION DOLLARS($5,000,000)---------- FOR ANY SINGLE OBLIGATION.

and to bind OLD REPUBLIC SURETY COMPANY thereby, and all of the acts of said Attorneys-in-Fact, pursuant to these presents, are ratified and confirmed. This document is not valid unless printedon colored background and is multi-colored. This appointment is made under and by authority of the board of directors at a special meeting held on February 18, 1982. This Power of Attorney is signed and sealed by facsimile under and by the authority of the following resolutions adopted by the board of directors of the OLD REPUBLIC SURETY COMPANY on February 18, 1982.

RESOLVED that, the president, any vice-president, or assistant vice president, in conjunction with the secretary or any assistant secretary, may appoint attorneys-in-fact or agents with authority as defined or limited in the instrument evidencing the appointment in each case, for and on behalf of the company to execute and deliver and affix the seal of the company to bonds, undertakings, recognizances, and suretyship obligations of all kinds; and said officers may remove any such attorney-in-fact or agent and revoke any Power of Attorney previously granted to such person.

RESOLVED FURTHER, that any bond, undertaking, recognizance, or suretyship obligation shall be valid and binding upon the Company
(i) when signed by the president, any vice president or assistant vice president, and attested and sealed (if a seal be required) by any secretary or assistant secretary; or
(ii) when signed by the president, any vice president or assistant vice president, secretary or assistant secretary, and countersigned and sealed (if a seal be required) by a duly authorized attorney-in-fact or agent; or
(iii) when duly executed and sealed (if a seal be required) by one or more attorneys-in-fact or agents pursuant to and within the limits of the authority evidenced by the Power of Attorney issued by the company to such person or persons.

RESOLVED FURTHER, that the signature of any authorized officer and the seal of the company may be affixed by facsimile to any Power of Attorney or certification thereof authorizing the execution and delivery of any bond, undertaking, recognizance, or other suretyship obligations of the company; and such signature and seal when so used shall have the same force and effect as though manually affixed.

IN WITNESS WHEREOF, OLD REPUBLIC SURETY COMPANY has caused these presents to be signed by its proper officer, and its corporate seal to be affixed this 8TH day of NOVEMBER, 2016.

**OLD REPUBLIC SURETY COMPANY**

Jane E. Cherney
Assistant Secretary

OLD REPUBLIC SURETY COMPANY CORPORATE SEAL 1891

Alan Pavlic
President

STATE OF WISCONSIN, COUNTY OF WAUKESHA-SS

On this 8TH day of NOVEMBER, 2016, personally came before me, Alan Pavlic and Jane E Cherney, to me known to be the individuals and officers of the OLD REPUBLIC SURETY COMPANY who executed the above instrument, and they each acknowledged the execution of the same, and being by me duly sworn, did severally depose and say; that they are the said officers of the corporation aforesaid, and that the seal affixed to the above instrument is the seal of the corporation, and that said corporate seal and their signatures as such officers were duly affixed and subscribed to the said instrument by the authority of the board of directors of said corporation.

KATHRYN R. PEARSON NOTARY PUBLIC STATE OF WISCONSIN

Kathryn R. Pearson
Notary Public
My commission expires: 9/28/2018

**(Expiration of notary commission does not invalidate this instrument)**

CERTIFICATE

I, the undersigned, assistant secretary of the OLD REPUBLIC SURETY COMPANY, a Wisconsin corporation, CERTIFY that the foregoing and attached Power of Attorney remains in full force and has not been revoked; and furthermore, that the Resolutions of the board of directors set forth in the Power of Attorney, are now in force.

40-6220

Signed and sealed at the City of Brookfield, WI this 26th day of April, 2017

OLD REPUBLIC SURETY COMPANY CORPORATE SEAL 1891

Jane E. Cherney
Assistant Secretary

J. G. ELLIOTT COMPANY

THIS DOCUMENT HAS A COLORED BACKGROUND AND IS MULTI-COLORED ON THE FACE. THE COMPANY LOGO APPEARS ON THE BACK OF THIS DOCUMENT AS A WATERMARK. IF THESE FEATURES ARE ABSENT, THIS DOCUMENT IS VOID.

22851-W QRSC 22262 (5-10)

DOCUMENT 00 41 13 - BID FORM

1.1 BID INFORMATION

A. Bidder: C and S Construction.

B. Project Name: School Bus Barn

C. Project Location: Imperial, Nebraska

D. Owner: Chase County Schools

E. Engineer: Engineering International, 402 Norris Ave, Suite 203, McCook, NE 69001

1.2 CERTIFICATIONS AND BASE BID

A. Base Bid, Single-Prime (All Trades) Contract: The undersigned Bidder, having carefully examined the Procurement and Contracting Requirements, Conditions of the Contract, Drawings, Specifications, and all subsequent Addenda, as prepared by Engineering International, having visited the site, and being familiar with all conditions and requirements of the Work, hereby agrees to furnish all material, labor, equipment and services, including all scheduled allowances, necessary to complete the construction of the above-named project, according to the requirements of the Procurement and Contracting Documents, for the stipulated sum of:

**Option 1:** A 70' X 96' pre-engineered metal building, unsprinkled, with 2-hour fire wall, 90 minute doors, rolling-coil door on storage room. Outdoor electrical hook-ups for route buses, outdoor wash pad, 2 bays for activity buses, one maintenance bay, break room, restrooms, mech room and enclosed mezzanine storage. By-pass girts, 1.5:12 standing seam room, 18' eave. See plans for details.

Option 1 Base Bid: Five hunded Sixty Five Thousand eight hundred fifty Dollars ($ 565,850.00).

**Option 2:** A 70' X 110' pre-engineered metal building, similar to Option 1 with the following notable differences: 3 bays for activity buses, full coverage fire sprinkler, no fire wall, unenclosed mezzanine, no rolling coil door on the storage area. See plans for details.

Option 2 Base Bid: Five hundre sixteen Thousand six hundred. Dollars ($ 516,600.00).

1.3 BID GUARANTEE

A. The undersigned Bidder agrees to execute a contract for this Work in the above amount and to furnish surety as specified within 10 days after a written Notice of Award, if offered within 60 days after receipt of bids, and on failure to do so agrees to forfeit to Owner the attached cash, cashier's check, certified check, U.S. money order, or bid bond, as liquidated damages for such failure, in the following amount constituting five percent (5%) of the Base Bid amount above:

1. Twenty eight Thousand Two hundred Ninety two and 50 cents Dollars ($ 28,292.50).

B. In the event Owner does not offer Notice of Award within the time limits stated above, Owner will return to the undersigned the cash, cashier's check, certified check, U.S. money order, or bid bond.

1.4 TIME OF COMPLETION AND LIQUIDATED DAMAGES

A. Notice of Intent to Award shall be issued within 45 days of receipt of bids. Notice to Proceed shall be issued within 10 days after Bonds, Insurance, and all Contract documents have been received from the Successful Bidder. Said Bidder shall begin the Work on receipt of the Notice to Proceed and shall complete the Work on or before January 1, 2018. Work is subject to liquidated damages of $50 per work day for work not completed within the Contract Time.

1.5 SUBCONTRACTORS AND SUPPLIERS

A. The following companies shall execute subcontracts for the portions of the Work indicated:
1. Flooring: Home Decor.
2. Carpentry: C and S Construction.
3. Electrical Work: TBD.
4. Painting and Finishes: C and S Construction.
5. Plumbing: Aupperle Plumbing.
6. Sprinkler Installation (Option 2 only): Bamford.
7. Other Work: Site prep - Greg Koelner HVAC - Troxels

1.6 ACKNOWLEDGEMENT OF ADDENDA

A. The undersigned Bidder acknowledges receipt of and use of the following Addenda in the preparation of this Bid:

1. Addendum No. 1, dated May 2.
2. Addendum No. 2, dated May 4.
3. Addendum No. 3, dated May 4.

1.7 CONTRACTOR'S LICENSE

A. The undersigned further states that it, or the appropriate subcontractor is a duly licensed contractor, for the type of work proposed, in Chase County, NE. All fees, permits, etc., pursuant to submitting this proposal have been paid in full.

1.8 SUBMISSION OF BID

A. Respectfully submitted this 8 day of May, 2017.

B. Submitted By: C and S Construction
*(Name of Bidding Firm or Corporation.)*

C. Authorized Signature: Clayton Swihart
*(Handwritten signature).*

D. Signed By: Clayton Giesbrecht
*(Type or print name).*

E. Title: Partner
*(Owner/Partner/President/Vice President).*

F. Attest: _____
*(Handwritten signature).*

G. By: _____
*(Type or print name).*

H. Title: _____
*(Corporate Secretary or Assistant Secretary).*

I. Street Address: 120 Hancock Ave.

J. City, State, Zip: Grant NE 69140.

K. Phone: 308-352-8103.

L. Federal ID No.: 47-0736111

*(Affix Corporate Seal Here).*

END OF DOCUMENT 00 41 13

# BID BOND

**AMCO Insurance Company**
**Nationwide Mutual Insurance Company**
**Allied Property & Casualty Insurance Company**
1100 Locust St., Dept 2006 Des Moines, IA 50391-2006
(866) 387-0457

**CONTRACTOR:**
C & S Construction
76640 Road 336
Madrid, NE 69150

**SURETY:**
Nationwide Mutual Insurance Company
1100 Locust Street
Des Moines, Iowa 50391

**OWNER:**
Chase County Schools
520 East 9th St.
Imperial, NE 69033

**BOND AMOUNT:** 5% of Bid Amount (FIVE PERCENT OF BID AMOUNT)

**PROJECT:**
School Bus Barn

The Contractor and Surety are bound to the Owner in the amount set forth above, for the payment of which the Contractor and Surety bind themselves, their heirs, executors, administrators, successors and assigns, jointly and severally, as provided herein. The conditions of this Bond are such that if the Owner accepts the bid of the Contractor within the time specified in the bid documents, or within such time period as may be agreed to by the Owner and Contractor, and the Contractor either (1) enters into a contract with the Owner in accordance with the terms of such bid, and gives such bond or bonds as may be specified in the bidding or Contract Documents, with a surety admitted in the jurisdiction of the Project and otherwise acceptable to the Owner, for the faithful performance of such Contract and for the prompt payment of labor and material furnished in the prosecution thereof: or (2) pays to the Owner the difference, not to exceed the amount of this Bond, between the amount specified in said bid and such larger amount for which the Owner may in good faith contract with another party to perform the work covered by said bid, then this obligation shall be null and void, otherwise to remain in full force and effect. The Surety hereby waives any notice of an agreement between the Owner and Contractor to extend the time in which the Owner may accept the bid. Waiver of notice by the Surety shall not apply to any extension exceeding sixty (60) days in aggregate beyond the time for acceptance of bids specified in the bid documents, and the Owner and Contractor shall obtain the Surety's consent for an extension beyond sixty (60) days.

If this Bond is issued in connection with a subcontractor's bid to a Contractor, the term Contractor in this Bond shall be deemed to be a Subcontractor and the term Owner shall be deemed to be Contractor.

When this Bond has been furnished to comply with a statutory or other legal requirement in the location of the Project, any provision in this Bond conflicting with said statutory or legal requirement shall be deemed deleted herefrom and provisions conforming to such statutory or other legal requirement shall be deemed incorporated herein. When so furnished, the intent is that this bond shall be construed as a statutory bond and not as a common law bond.

Signed and sealed this 15th day of May, 2017

(Witness)

(Witness)

C & S Construction
(Principal) (Seal)

Clayts Smith
(Title)

Nationwide Mutual Insurance Company
(Surety) (Seal)

Heidi Juarez
(Title) Heidi Juarez, Attorney-in-Fact

SEAL

**This document conforms to American Institute of Architects Document A310, 2010 edition**

**Power of Attorney**

KNOW ALL MEN BY THESE PRESENTS THAT:

Nationwide Mutual Insurance Company, an Ohio corporation
National Casualty Company, an Ohio corporation

AMCO Insurance Company, an Iowa corporation
Allied Property and Casualty Insurance Company, an Iowa corporation

hereinafter referred to severally as the "Company" and collectively as "the Companies" does hereby make, constitute and appoint:

Heidi Juarez

each in their individual capacity, its true and lawful attorney-in-fact, with full power and authority to sign, seal, and execute on its behalf any and all bonds and undertakings, and other obligatory instruments of similar nature, in penalties not exceeding the sum of

Six Hundred Thousand Dollars and No/100 $ 600,000.00

and to bind the Company thereby, as fully and to the same extent as if such instruments were signed by the duly authorized officers of the Company; and all acts of said Attorney pursuant to the authority given are hereby ratified and confirmed.

This power of attorney is made and executed pursuant to and by authority of the following resolution duly adopted by the board of directors of the Company:

"RESOLVED, that the president, or any vice president be, and each hereby is, authorized and empowered to appoint attorneys-in-fact of the Company, and to authorize them to execute and deliver on behalf of the Company any and all bonds, forms, applications, memorandums, undertakings, recognizances, transfers, contracts of indemnity, policies, contracts guaranteeing the fidelity of persons holding positions of public or private trust, and other writings obligatory in nature that the business of the Company may require; and to modify or revoke, with or without cause, any such appointment or authority; provided, however, that the authority granted hereby shall in no way limit the authority of other duly authorized agents to sign and countersign any of said documents on behalf of the Company."

"RESOLVED FURTHER, that such attorneys-in-fact shall have full power and authority to execute and deliver any and all such documents and to bind the Company subject to the terms and limitations of the power of attorney issued to them, and to affix the seal of the Company thereto; provided, however, that said seal shall not be necessary for the validity of any such documents."

This power of attorney is signed and sealed under and by the following bylaws duly adopted by the board of directors of the Company.

Execution of Instruments. Any vice president, any assistant secretary or any assistant treasurer shall have the power and authority to sign or attest all approved documents, instruments, contracts, or other papers in connection with the operation of the business of the company in addition to the chairman of the board, the chief executive officer, president, treasurer or secretary; provided, however, the signature of any of them may be printed, engraved, or stamped on any approved document, contract, instrument, or other papers of the Company.

IN WITNESS WHEREOF, the Company has caused this instrument to be sealed and duly attested by the signature of its officer the 1st day of May, 2017.

Antonio C. Albanese, **Vice President** of Nationwide Mutual Insurance Company, National Casualty Company, AMCO Insurance Company, Allied Property and Casualty Insurance Company

**ACKNOWLEDGMENT**

STATE OF NEW YORK, COUNTY OF NEW YORK: ss
On this 1st day of May, 2017, before me came the above-named officer for the Company aforesaid, to me personally known to be the officer described in and who executed the preceding instrument, and he acknowledged the execution of the same, and being by me duly sworn, deposes and says, that he is the officer of the Company aforesaid, that the seal affixed hereto is the corporate seal of said Company, and the said corporate seal and his signature were duly affixed and subscribed to said instrument by the authority and direction of said Company.

BARRY T. BASSIS
Notary Public, State of New York
No. 02BA4656400
Qualified in New York County
Commission Expires April 30, 2019

Notary Public
My Commission Expires
April 30, 2019

**CERTIFICATE**

I, Laura B. Guy, Assistant Secretary of the Company, do hereby certify that the foregoing is a full, true and correct copy of the original power of attorney issued by the Company; that the resolution included therein is a true and correct transcript from the minutes of the meetings of the boards of directors and the same has not been revoked or amended in any manner; that said Antonio C. Albanese was on the date of the execution of the foregoing power of attorney the duly elected officer of the Company, and the corporate seal and his signature as officer were duly affixed and subscribed to the said instrument by the authority of said board of directors; and the foregoing power of attorney is still in full force and effect.

IN WITNESS WHEREOF, I have hereunto subscribed my name as Assistant Secretary, and affixed the corporate seal of said Company this 5th day of May, 2017.

This power of attorney expires: April 30, 2019

Assistant Secretary

BDJ 1(05-17)00

# NEW (113' X 70') SCHOOL BUS BARN
# CHASE COUNTY, NEBRASKA

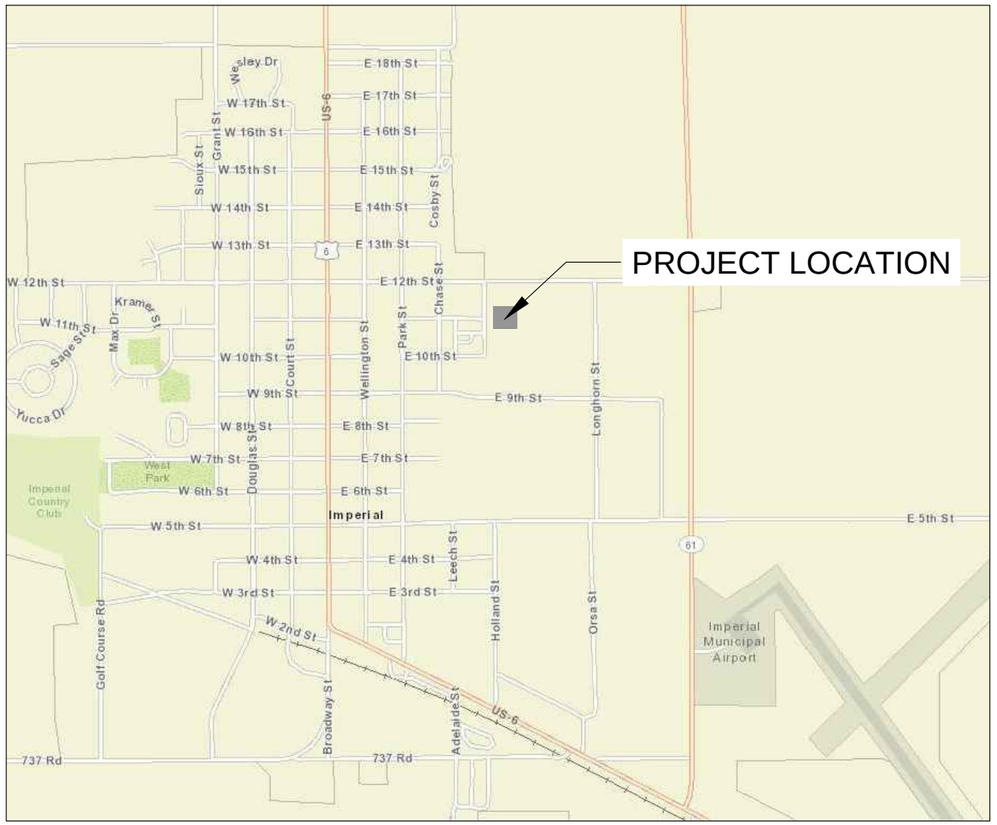


1 **LOCATION MAP**

SCALE: N.T.S.

NORTH

**NOTE:**
THE BUILDING HAS A SPRINKLER SYSTEM

**REVIEW SET NOT FOR CONSTRUCTION**


Engineering International
(308) 340-5963
P.O Box 401
402 Norris Avenue, Ste 107
McCook NE 69001-0401


**NEW (113' X 70) SCHOOL BUS BARN**
CHASE COUNTY SCHOOLS
**IMPERIAL, NEBRASKA**

COVER SHEET

DATE 3.23.2017

SCALE N.T.S.

CS1.0

# SHEET LIST TABLE


| | |
|---|---|
| CS1.0 | COVER SHEET |
| G1.0 | SHEET LIST TABLE |
| LS1.0 | LIFE SAFETY PLANS |
| **CIVIL** | |
| C1.0 | GRADING PLAN |
| C2.0 | UTILITY PLAN |
| C3.0 | PAVING AND GEOMETRIC PLAN |
| C4.0 | DETAILS |
| C4.1 | DETAILS |
| C4.2 | DETAILS |
| **ARCHITECTURAL** | |
| A1.0 | MAIN FLOOR PLAN |
| A1.1 | MEZZ. FLOOR PLAN |
| A2.0 | BUILDING SECTIONS |
| A2.1 | BUILDING SECTION |
| A3.0 | ELEVATIONS |
| A3.1 | ELEVATIONS |
| A4.0 | STAIR DETAILS |
| A4.1 | INTERIOR ELEVATIONS |
| A4.2 | ACCESSIBLE FIXTURES AND ACCESSORIES |
| A5.0 | DOOR SCHEDULE |
| A5.1 | DOOR SCHEDULE |
| A5.2 | ROOM FINISH SCHEDULE |
| **STRUCTURAL** | |
| S1.1 | STRUCTURAL NOTES |
| S2.1 | STRUCTURAL SCHEDULES |
| S3.1 | STRUCTURAL DETAILS |
| **MECHANICAL** | |
| M1.0 | MECH. FLOOR PLAN |
| M1.1 | MECH. MEZZ.PLAN |
| M1.2 | MECHANICAL SCHEDULES |
| **ELECTRICAL** | |
| E1.0 | ELECTRICAL PLAN |
| E1.1 | ELECTRICAL MEZZ. PLAN |
| E1.2 | ELECTRICAL SCHEDULES |
| **PLUMBING** | |
| P1.0 | WATER SUPPLY FLOOR PLAN |
| P1.1 | WASTE PLUMPING FLOOR PLAN |
| P1.2 | RISER DIAGRAM |
| P1.3 | PLUMBING SCHEDULE |


**REVIEW SET NOT FOR CONSTRUCTION**


Engineering International
(308) 340-5943
P.O.Box 401
402 North Adams St.
McCook NE 69001-0401


**NEW (113' X 70) SCHOOL BUS BARN**
CHASE COUNTY SCHOOLS
**IMPERIAL, NEBRASKA**

SHEET LIST

DATE 3.23.2017

SCALE N.T.S.

G1.0

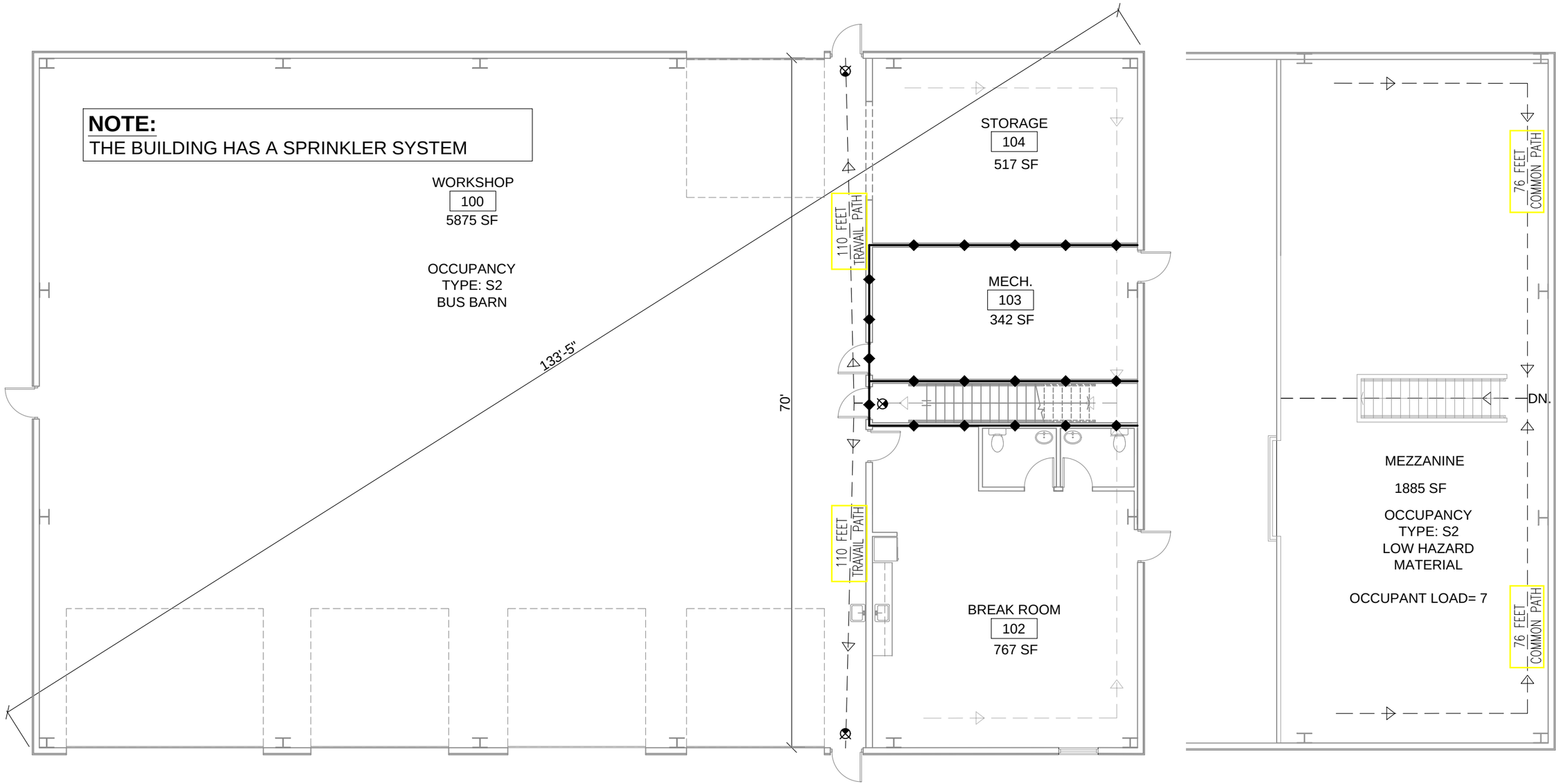


1 **LIFE SAFETY MAIN PLAN**

SCALE: 3/32" = 1'-0" [11"X17"]
3/16" = 1'-0" [22"X34"]

NORTH

1 HR FIRE RATED WALL

2 **LIFE SAFETY MEZZ. PLAN**

SCALE: 3/32" = 1'-0" [11"X17"]
3/16" = 1'-0" [22"X34"]

NORTH

## NOTES:

1. PORTABLE FIRE EXTINGUISHER SHALL BE PROVIDED IN LOCATIONS SPECIFIED BY THE FIRE INSPECTOR ,
2. PLACE OF THE FIRE EXTINGUISHER TO BE WITHIN 75 FEET TRAVEL DISTANCE FROM ANYWHERE WITHIN THE SPACE.
3. EXITS TERMINATE DIRECTLY AT A PUBLIC WAY
4. ILLUMINATION AND EMERGENCY LIGHTING SHALL PROVIDE AN AVERAGE OF ONE FOOT-CANDLE OF LIGHTING, AT FLOOR LEVEL, THROUGHOUT THE MEANS OF EGRESS TO A PUBLIC WAY
5. HANDRAILS ON STAIRS SHALL NOT BE LESS THAN 34" AND NOT MORE THAN 38" ABOVE THE SURFACE OF A TREAD AND SHALL BE PROVIDED ON BOTH SIDES. HANDRAILS SHALL EXTEND 12" HORIZONTALLY BEYONDTHE TOP RISER AND CONTINUE TO SLOPE FOR ONE TREAD DEPTH BEYOND THE BOTTOM RISER AND BE RETURNED TO THE WALL / FLOOR / ON EACH END.

**REVIEW SET**
**NOT FOR CONSTRUCTION**

Engineering International
(308) 340-5943
P.O Box 401
402 Norris Ave Suite 107
McCook NE 69001-0401

**NEW (113' X 70) SCHOOL BUS BARN**
CHASE COUNTY SCHOOLS
**IMPERIAL, NEBRASKA**

LIFE SAFETY PLANS

DATE 3.23.2017

SCALE 3/32"=1'-0"

LS1.0

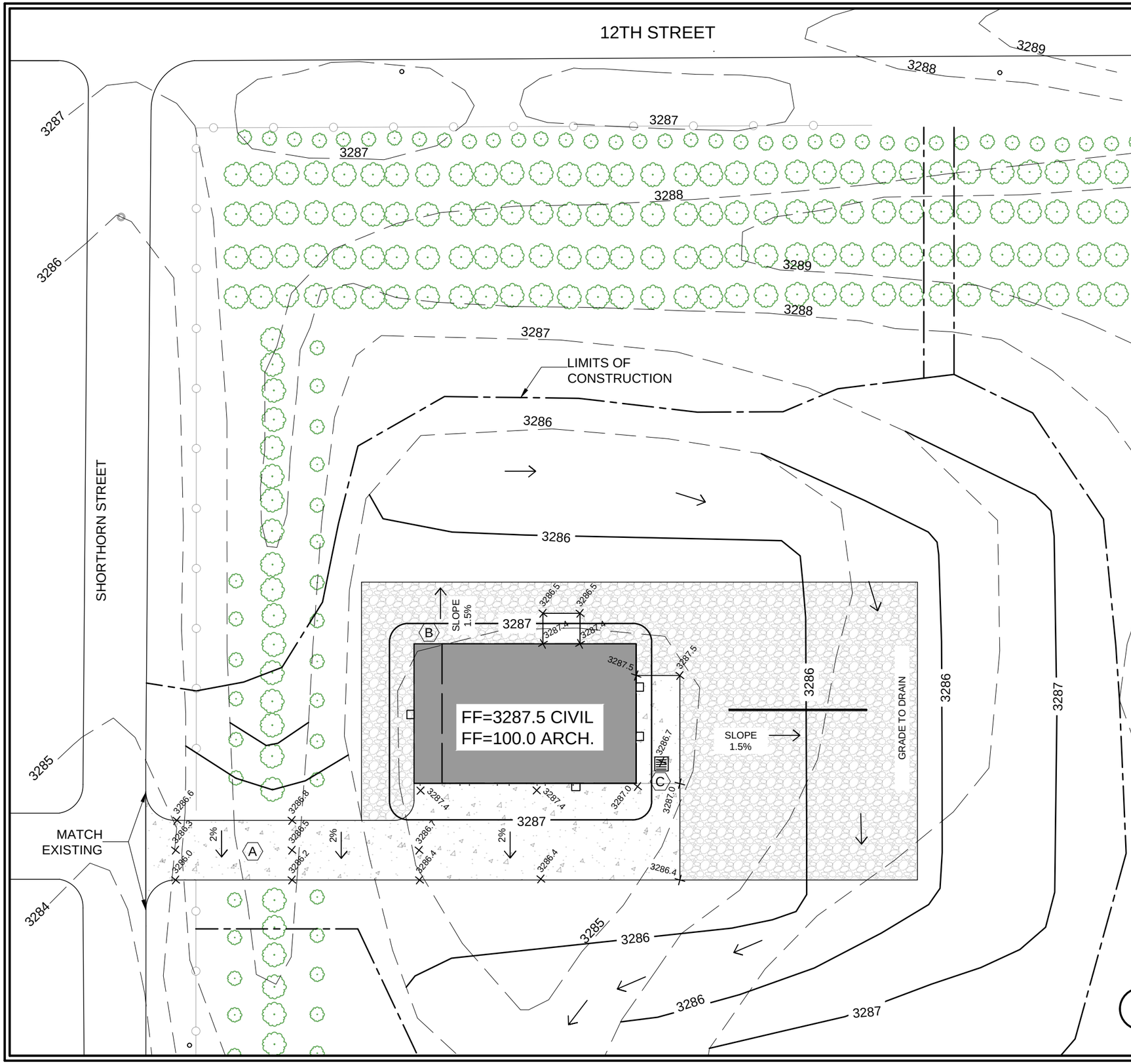


LEGEND:

- EXISTING CONTOURS
- NEW CONTOURS
- LIMITS OF CONSTRUCTION

**NOTE:**

GRADING GENERAL NOTES

1. ALL ELEVATIONS SHOWN ARE TOP OF SLAB ELEVATIONS UNLESS OTHERWISE NOTED.

GRADING QUANTITIES

| | |
|---|---|
| STRIP 6" TOPSOIL. | 2,755 CU. YDS. |
| CUT | 670 CU. YDS. |
| FILL | 3,590 CU. YDS. |
| NET | 3,190 CU. YDS. (FILL) |

GRADING QUANTITITES ARE APPROXIMATE AND ARE PROVIDED FOR REFERENCE ONLY.

GRADING KEY NOTES

A. REMOVE EXISTING CEDAR TREES FOR DRIVEWAY. SCARIFY TOP 6" OF GROUND UNDER ALL PAVEMENT AND COMPACT TO 95% STANDARD PROCTOR UNDER PAVEMENT AND 98% UNDER FOOTING / FOUNDATION.

B. SLOPE 5% FROM BUILDING FOR FIRST 10', 2% MIN SLOPE THEREAFTER.

C. CONSTRUCT GRATE INLET. 2'X3' NYOPLAST-ADS PVC ROAD AND HIGHWAY GRATE INLET WITH 2'X3' SQUARE GRATE (H-20) OR APPROVED EQUAL. SEE DETAIL 4 ON SHEET C4.1.

D. GRATE = 3286.7. 4" FL OUT = 3285.7.

1 **GRADING PLAN**

SCALE: 1" = 50' [11"X17"]
1 = 100' [22"X34"]

NORTH

**BID SET**


Engineering International
(308) 340-5943
P.O.Box 401
402 Norris Avenue, Suite 107
McCook NE 69001-0401


**NEW (113' X 70') SCHOOL BUS BARN**
CHASE COUNTY SCHOOLS
**IMPERIAL, NEBRASKA**

GRADING PLAN

DATE 3.22.2017

SCALE 1"=50'-0"

C1.0

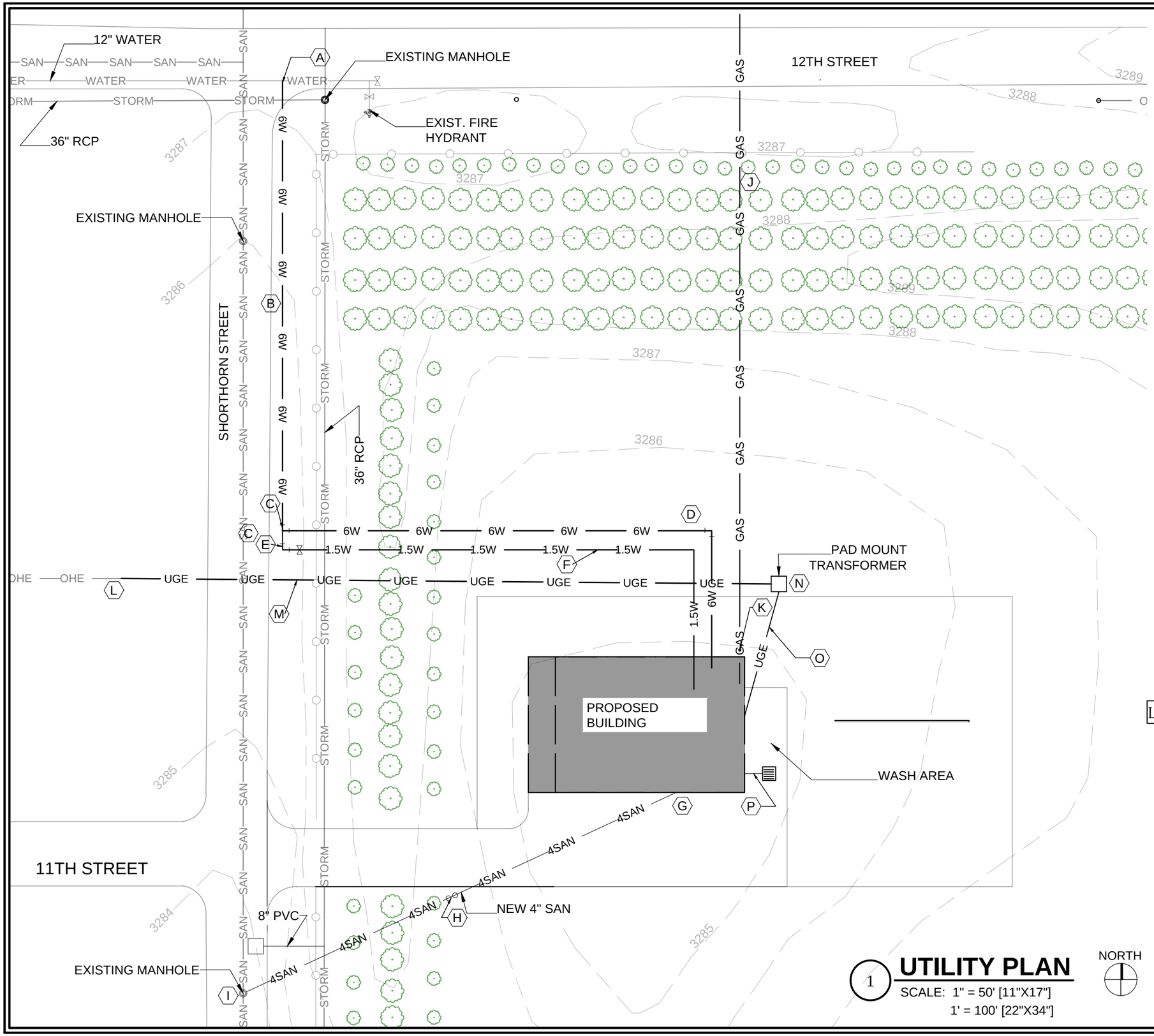


## UTILITY KEY NOTES

A. 6" TAPPING SLEEVE AND VALVE BY CITY OF IMPERIAL. COORDINATE WITH CITY PRIOR TO CONSTRUCTION. CONTRACTOR TO EXPOSE WATER MAIN.

B. INSTALL 6" WATER SERVICE, 255 LF

C. INSTALL 6"X1"X6" TEE. INSTALL THRUST BLOCK PER DETAIL. PROVIDE AND INSTALL POST INDICATOR VALVE PER DETAIL 3, SHEET C4.0

D. INSTALL 6" FIRE WATER SERVICE, 310 LF, INCLUDING 90 ELL AND THRUST BLOCK. STUB INTO FUTURE MECHANICAL ROOM.

E. INSTALL 1" CURB STOP FOR DOMESTIC WATER.

F. INSTALL 1" DOMESTIC WATER SUPPLY, 280 LF. STUB INTO FUTURE MECHANICAL ROOM.

G. CONSTRUCT 4" SANITARY SEWER, 260 LF. 2.0% MIN SLOPE, SEE PLUMBING SHEETS FOR CONTINUATION IN BUILDING.

H. CONSTRUCT DOUBLE CLEAN-OUT. SEE DETAIL 1, SHEET C4.0

I. CONNECT TO EXISTING MANHOLE.

J. PROPOSED GAS SERVICE TO BE LOCATED, SIZED AND CONSTRUCTED BY LOCAL UTILITY PROVIDER. CONTRACTOR SHALL COORDINATE. SEE PLUMBING SHEET FOR CONTINUATION IN BUILDING.

K. GAS METER INSTALLED BY LOCAL UTILITY.

L. NEW UNDERGROUND SERVICE FROM EXISTING OHE, BY LOCAL UTILITY.

M. NEW UNDERGROUND ELECTRICAL SERVICE, BY LOCAL UTILITY.

N. NEW PAD MOUNT TRANSFORMER.

O. NEW UNDERGROUND SERVICE, BY CONTRACTOR. SEE ELECTRICAL SHEET FOR CONTINUATION INSIDE.

P. NEW 4" SEWER FROM WASH TO OIL / SEDIMENT TRAP. SEE PLUMBING SHEET FOR CONTINUATION.

## LEGEND:

| | |
|---|---|
| 1.5W | NEW 1.5" WATER |
| 6W | NEW 6" WATER |
| 4SAN | NEW 4" SANITARY SEWER |
| STORM | EXISTING STORM SEWER |
| GAS | NEW GAS LINE |
| UGE | NEW UNDERGROUND ELECTRICAL SERVICE |
| WATER | EXISTING MAIN WATER |
| OHE | EXISTING OVERHEAD ELECTRIC SERVICE |
| SAN | EXISTING SANITARY SEWER |

1 **UTILITY PLAN**

SCALE: 1" = 50' [11"X17"]
1' = 100' [22"X34"]

NORTH

**BID SET**


Engineering International
(308) 340-9943
P.O.Box 401
402 North Adams St.
McCook NE 69001-0401


**NEW (113' X 70') SCHOOL BUS BARN**
CHASE COUNTY SCHOOLS
**IMPERIAL, NEBRASKA**

UTILITY PLAN

DATE 3.22.2017

SCALE 1"=50'-0"

C2.0

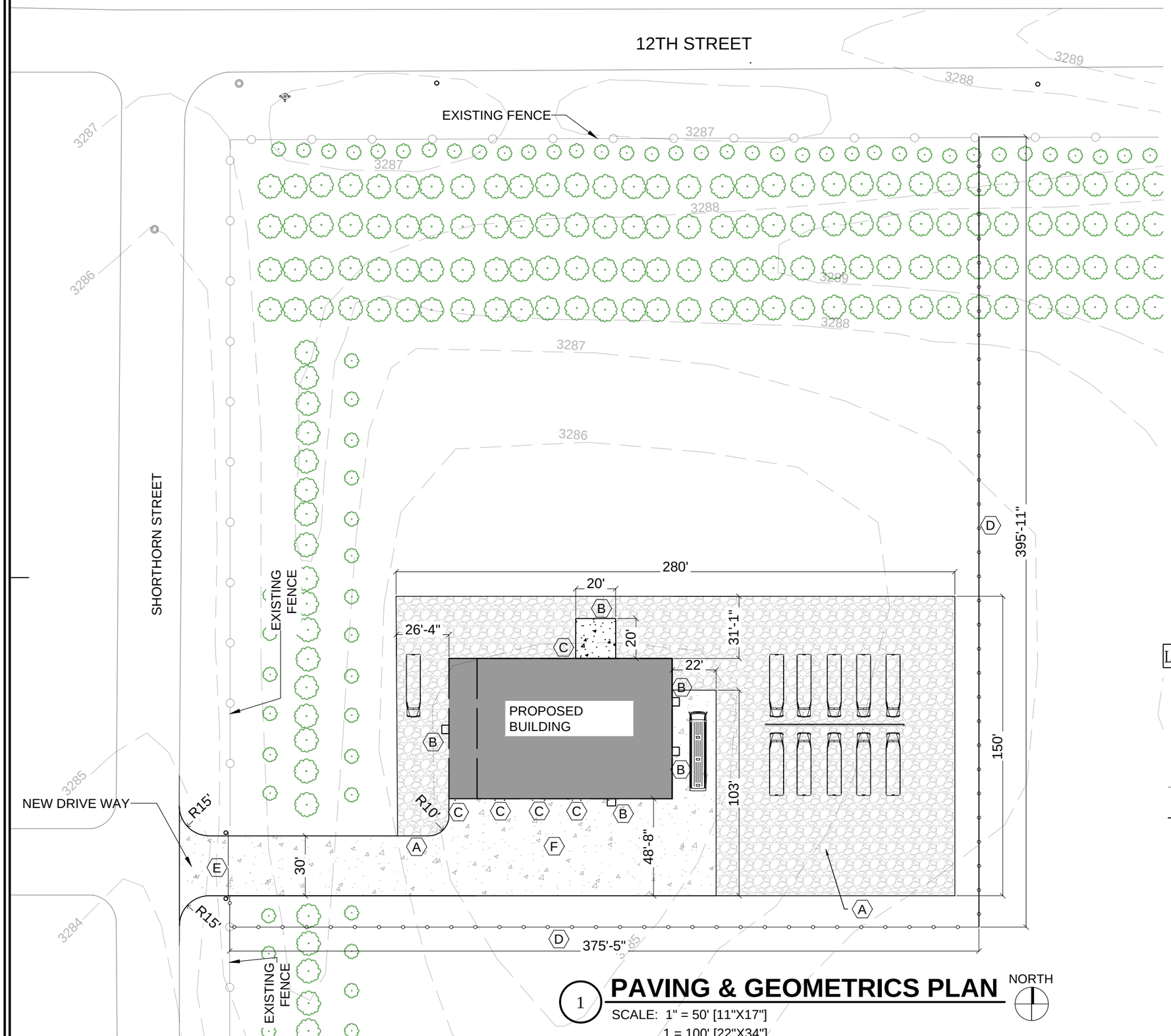


1 **PAVING & GEOMETRICS PLAN**

SCALE: 1" = 50' [11"X17"]
1 = 100' [22"X34"]

NORTH

**NOTE:**

A. CONSTRUCT THICKENED EDGE. SEE DETAIL 5, SHEET C4.1

B. CONSTRUCT STRUCTURAL STOOP. SEE DETAIL 4, SHEET S3.1

C. CONSTRUCT BOLLARD.

D. CONSTRUCT 785' OF 48" TALL CHAIN LINK FENCE, SEE DETAIL 7, SHT C4.2

E. CONSTRUCT SLIDING GATE FOR CHAIN LINK FENCE, SEE DETAIL 6, SHT C4.2

F. SAW PCC PAVEMENT AS SOON AS PRACTICAL AFTER POURING AND PRIOR TO CONCRETE CRACKING. JOINTS SHALL BE AT 15' INTERVALS TYPICALLY. PANELS SHALL BE SQUARE WHEN POSSIBLE WITH A LENGTH TO WIDTH RATIO OF LESS THAN 1.5. ODD SHAPED PANELS SHALL BE REINFORCED WITH 6X6,10/10 WWM ON CHAIRS AT 3' C.C. MAX.

LEGEND:

- CONSTRUCT 3/4" CRUSHED ROCK PARKING LOT
- CONSTRUCT 6" " RCC PAVEMENT
- EXISTING FENCE
- NEW FENCE

**BID SET**


Engineering International
(308) 340-5943
P.O Box 401
402 North Adams Ave
McCook NE 69001-0401


**NEW (113' X 70') SCHOOL BUS BARN**
CHASE COUNTY SCHOOLS
**IMPERIAL, NEBRASKA**

**PAVING & GEOMETRIC PLAN**

DATE 3.22.2017

SCALE 1"=50'-0"

C3.0

NOTES:

1. FRAME AND COVER TO BE CAST IRON. APPROX. WEIGHT IS 70 LBS.
2. COVER TO HAVE THE LETTERS "C.O." CAST ON TOP
3. CONCRETE REST BLOCK SHALL BE 2'-0" LONG X O.D. OF PIPE + 6" ON EACH SIDE.

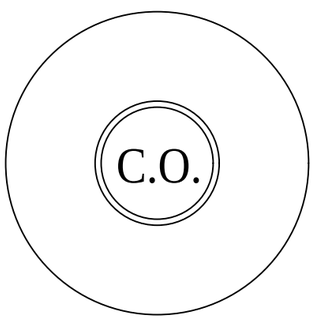


PLAN

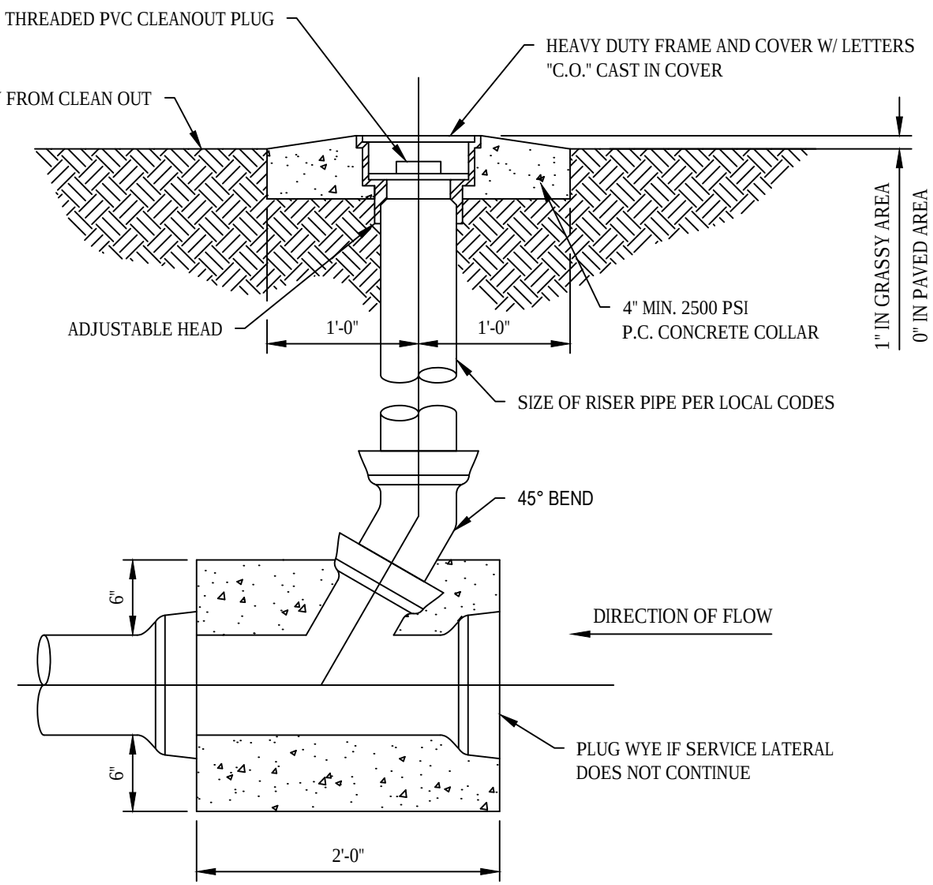


SECTION

## 1 SEWER CLEANOUT DETAIL

SCALE: NOT TO SCALE

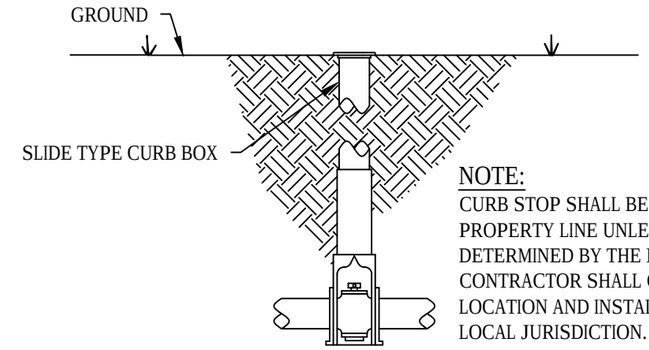


NOTE:
CURB STOP SHALL BE LOCATED ON PROPERTY LINE UNLESS OTHERWISE DETERMINED BY THE ENGINEER. CONTRACTOR SHALL COORDINATE LOCATION AND INSTALLATION WITH LOCAL JURISDICTION.

## 2 TYPICAL CURB STOP DETAIL

SCALE: NOT TO SCALE

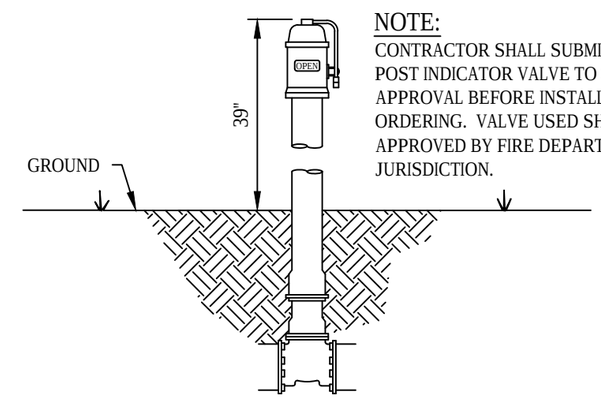


NOTE:
CONTRACTOR SHALL SUBMIT PROPOSED POST INDICATOR VALVE TO OWNER FOR APPROVAL BEFORE INSTALLATION OR ORDERING. VALVE USED SHALL BE APPROVED BY FIRE DEPARTMENT HAVING JURISDICTION.

## 3 POST INDICATOR VALVE DETAIL

SCALE: NOT TO SCALE

BID SET


Engineering International
(308) 340-5943
P.O. Box 401
402 Norris Ave. Suite 107
McCook NE 69001-0401


NEW (113' X 70') SCHOOL BUS BARN
CHASE COUNTY SCHOOLS
IMPERIAL, NEBRASKA

DETAILS

DATE 3.22.2017

SCALE

C4.0

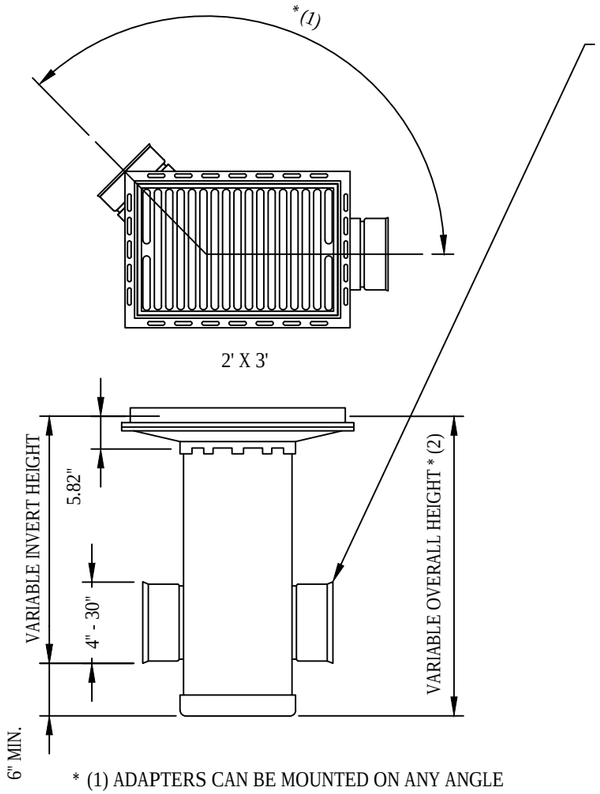


VARIOUS TYPES OF INLET AND OUTLET ADAPTERS AVAILABLE IN SIZES 4" THRU 30" FOR: ADS N-12, SDR-35 SEWER, SCHEDULE 40 DWV, CORRUGATED PVC AND RIBBED PVC

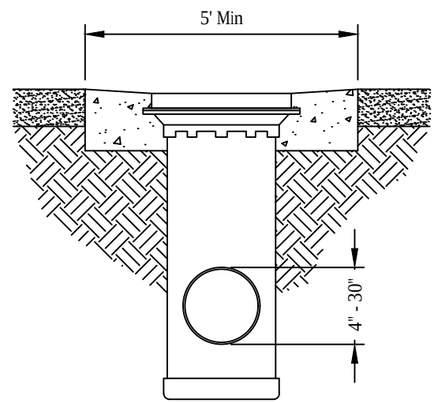


* (1) ADAPTERS CAN BE MOUNTED ON ANY ANGLE 0º TO 359º. SEE MANUFACTURERS RECOMMENDATIONS TO DETERMINE MINIMUM ANGLE BETWEEN ADAPTERS.
* (2) MAXIMUM RECOMMENDED OVERALL HEIGHT 10'.

1. GRATE INLET FITS DRAIN BASIN SIZES: 18", 24" & 30"
2. MATERIAL: FRAME & GRATE MATERIALS SHALL CONFORM TO ASTM A-36 STEEL, BASE PLATE MATERIALS SHALL CONFORM TO ASTM A536 GRADE 70-50-05 DUCTILE IRON.
3. ALL CASTINGS ARE FURNISHED WITH BLACK PAINT AND ZINC PLATED FASTENERS
4. LOCKING DEVICE AVAILABLE UPON REQUEST

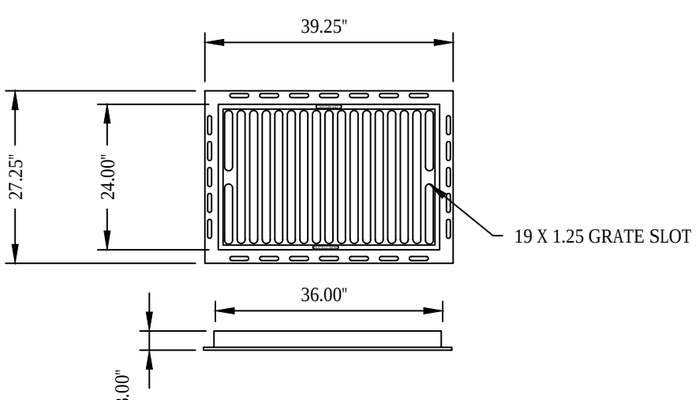


NUMBER 2'X3' GRATE INLET & GRATE DETAIL

SHEETLT SHEETRT SCALE: NOT TO SCALE

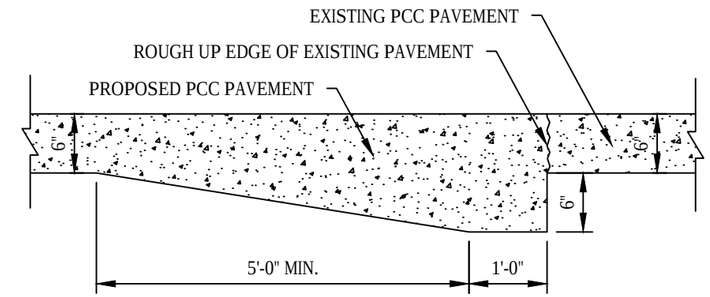


5 THICKENED EDGE DETAIL

SCALE: NOT TO SCALE

BID SET

Engineering International
(308) 340-5943
P.O.Box 401
402 North Avenue
McCook NE 69001-0401

NEW (113' X 70') SCHOOL BUS BARN
CHASE COUNTY SCHOOLS
IMPERIAL, NEBRASKA

DETAILS

DATE 3.22.2017

SCALE

C4.1

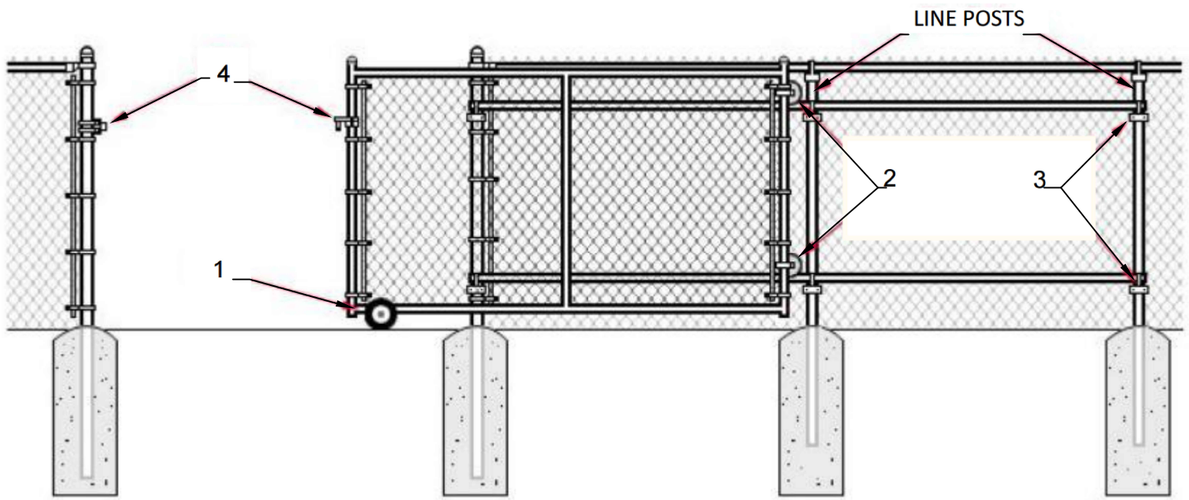


## 6 ROLLING GATE DETAIL

SCALE: NOT TO SCALE

ROLLING GATE KEY NOTES

1. SINGLE OR DOUBLE WHEEL CARRIER
2. REAR WHEEL
3. PIPE TRACK BRACKET
4. LATCH

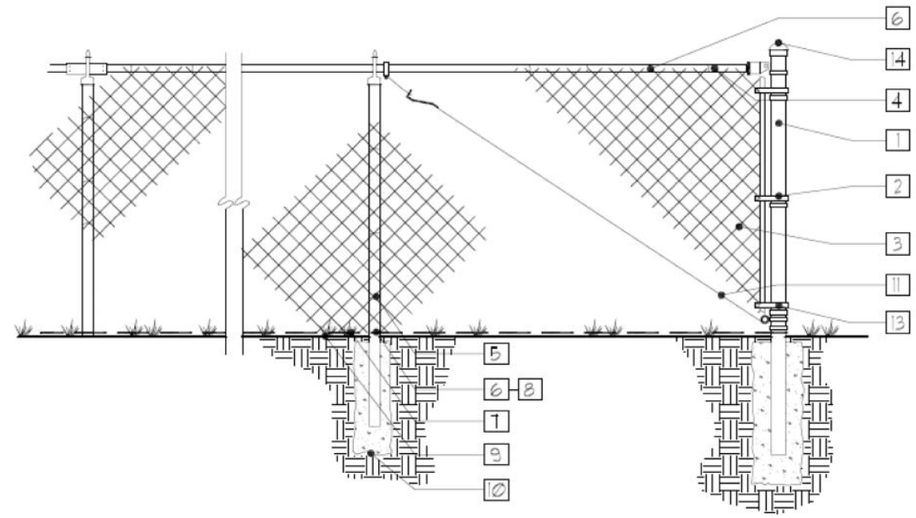


## 7 CHAIN LINK FENCE DETAIL

SCALE: NOT TO SCALE

CHAIN LINK FENCE KEY NOTES

1. TERMINAL POST (REFER TO CHART FOR MINIMUM SIZE)
2. TENSION BANDS (MAXIMUM SPACING 12" ON CENTER)
3. WIRE FABRIC MINIMUM 121/2 GAGE.
4. TOP RAIL (MINIMUM 1 5/8" X .047)
5. LINE POST- REFER TO CHART FOR MINIMUM SIZE
6. WIRE FABRIC TIES AT TOP RAIL (MINIMUM 5 TIES BETWEEN POSTS)
7. BOTTOM TENSION WIRE MINIMUM 7 GAGE.
8. WIRE FABRIC TIES MINIMUM AT 12" ON CENTER
9. MAXIMUM CLEAR SPACING ALLOWED AT BOTTOM 2"
10. FOOTING SIZE (REFER TO CHART FOR MINIMUM REQUIRED SIZING)
11. OPTIONAL TRUSS ROD
12. OPTIONAL DRAW BAR
13. POST CAP
14. FENCE HEIGHT (REFER TO CHART FOR HEIGHT REQUIREMENTS)

| FENCE HEIGHT (INCHES) | TERMINAL POST DIMENSIONS (INCHES) (O.D. X WALL THICKNESS) | LINE POST DIMENSIONS (O.D. X WALL THICKNESS) | TERMINAL POST CONCRETE FOUNDATION SIZE (DIAMETER X DEPTH) | LINE POST CONCRETE FOUNDATION SIZE (DIAMETER X DEPTH) |
|---|---|---|---|---|
| Up to 48 | 2 3/8 x 0.042 | 1 5/8 x 0.047 | 10 x 24 | 8 x 24 |
| 49 to 60 | 2 3/8 x 0.042 | 1 7/8 x 0.055 | 10 x 24 | 8 x 24 |
| 61 to 72 | 2 3/8 x 0.042 | 1 7/8 x 0.065 | 10 x 24 | 8 x 24 |
| 73 to 96 | 2 3/8 x 0.110 | 2 3/8 x 0.095 | 10 x 36 | 10 x 36 |
| 97 to 120 | 2 7/8 x 0.110 | 2 3/8 x 0.130 | 12 x 40 | 10 x 40 |
| 121 to 144 | 2 7/8 x 0.160 | 2 7/8 x 0.120 | 12 x 42 | 12 x 42 |

1. THIS TABLE IS APPLICABLE ONLY TO FENCES WITH UNRESTRICTED AIRFLOW.
2. BRACES MUST BE USED AT TERMINAL POSTS IF TOP TENSION WIRE IS USED INSTEAD OF TOP RAIL.
3. POST SPACING: 10 FOOT (3 M) ON CENTER MAXIMUM.
4. POSTS SHALL BE EMBEDDED TO WITHIN 6 INCHES (152 MM) FROM THE BOTTOM OF THE FOUNDATION.

BID SET


Engineering International
(308) 340-5943
P.O Box 401
402 Norris Avenue, Suite 107
McCook NE 69001-0401


NEW (113' X 70') SCHOOL BUS BARN
CHASE COUNTY SCHOOLS
IMPERIAL, NEBRASKA

DETAILS

DATE 3.22.2017

SCALE

C4.2

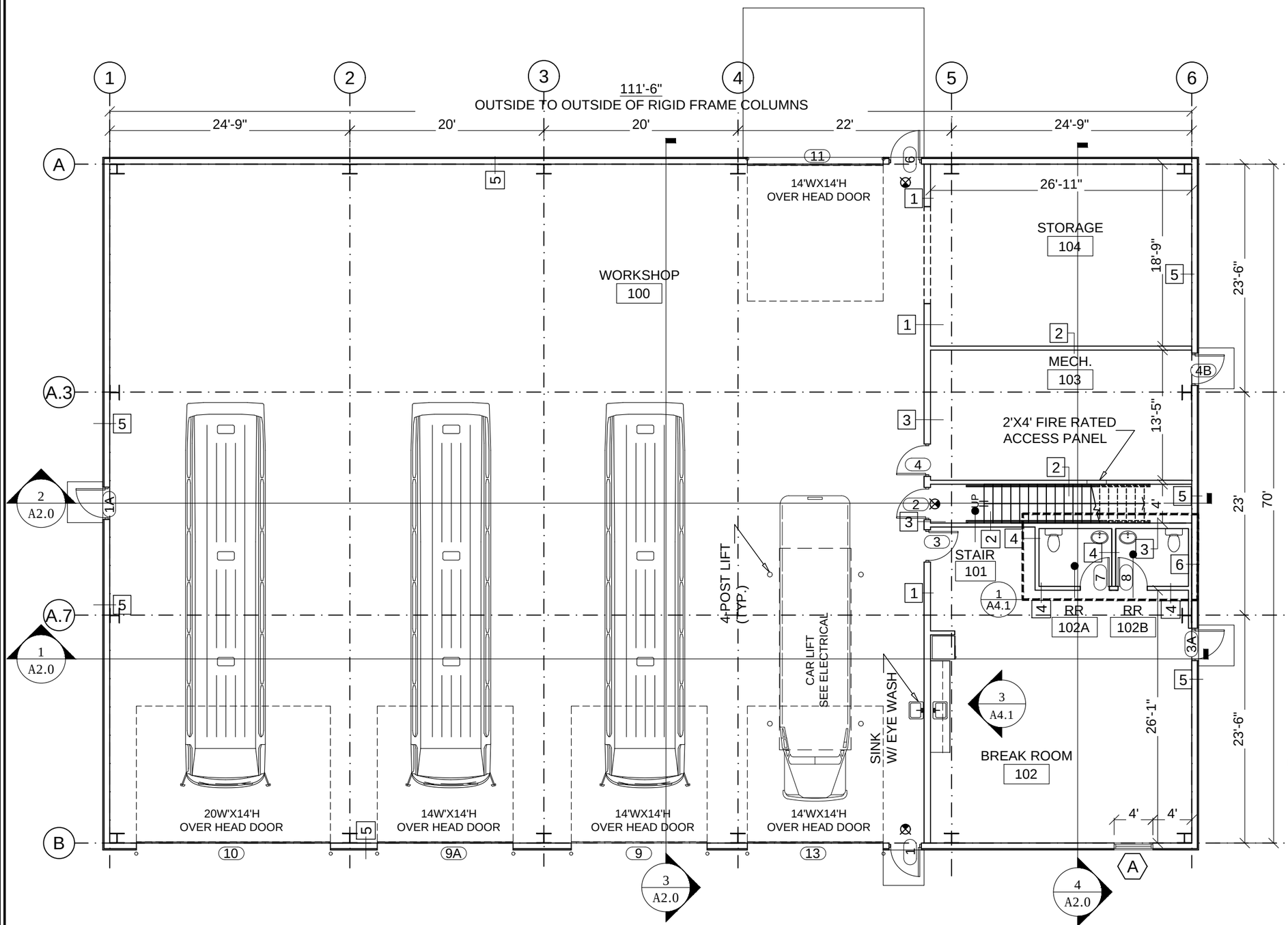


# 1 MAIN FLOOR PLAN

SCALE: 3/32" = 1'-0" [11"X17"]
3/16" = 1'-0" [22"X34"]

NORTH

**NOTE:**
THE BUILDING IS EQUIPPED WITH SPRINKLER SYSTEM

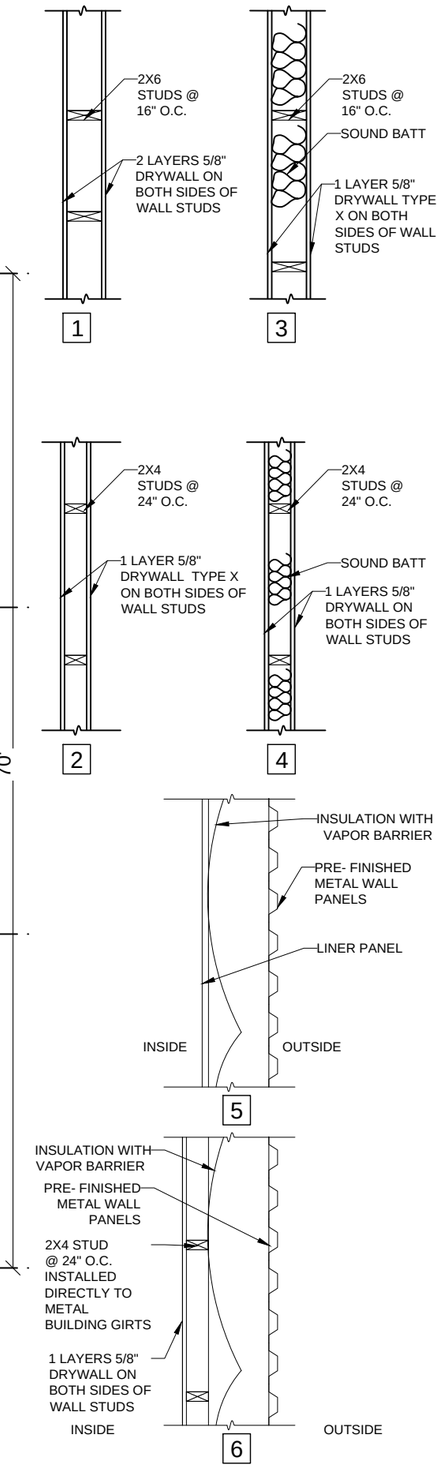


# 2 WALL TYPES

SCALE: 3/4" = 1'-0" [11"X17"]
1 1/2" = 1'-0" [22"X34"]

**REVIEW SET**
**NOT FOR**
**CONSTRUCTION**


Engineering International
(308) 340-9943
P.O. Box 401
402 North Adams Street
McCook NE 69001-0401


**NEW (113' X 70) SCHOOL BUS BARN**
CHASE COUNTY SCHOOLS
**IMPERIAL, NEBRASKA**

MAIN FLOOR PLAN

DATE 3.23.2017

SCALE 3/32"=1'-0"

A1.0

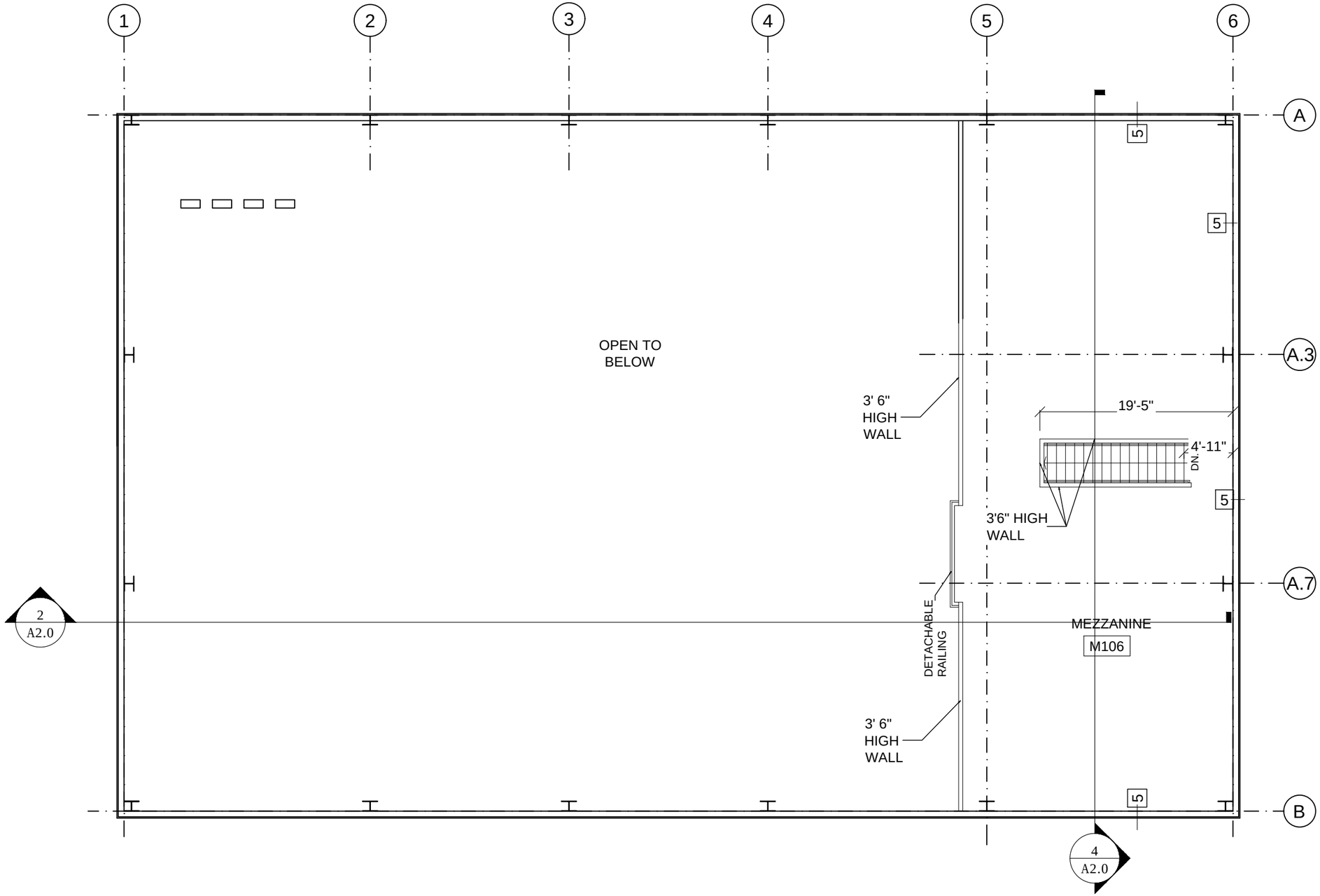


1 **MEZZ. FLOOR PLAN**

SCALE: 3/32" = 1'-0" [11"X17"]
3/16" = 1'-0" [22"X34"]

NORTH

REVIEW SET
NOT FOR
CONSTRUCTION


Engineering International
(308) 340-5943
P.O.Box 401
402 Norris Ave Ste 107
McCook NE 69001-0401


NEW (113' X 70) SCHOOL BUS BARN
CHASE COUNTY SCHOOLS
IMPERIAL, NEBRASKA

MEZZ. FLOOR PLAN

DATE 3.23.2017

SCALE 3/32"=1'-0"

A1.1

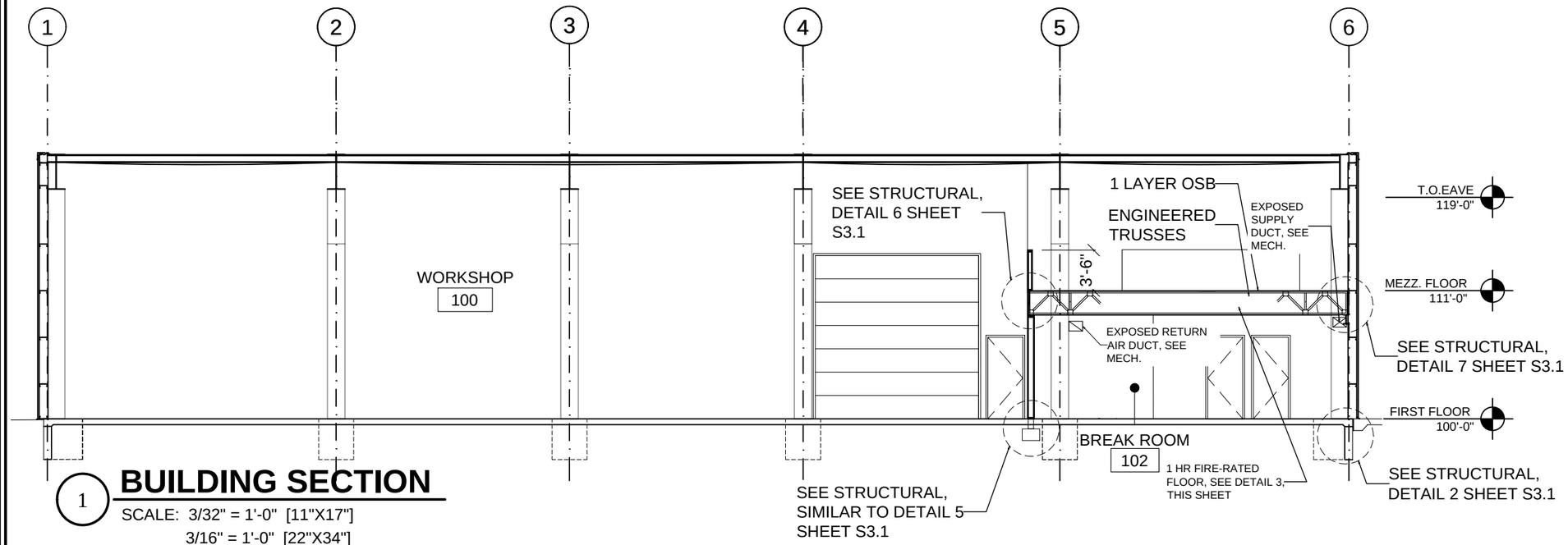


## 1 BUILDING SECTION

SCALE: 3/32" = 1'-0" [11"X17"]
3/16" = 1'-0" [22"X34"]

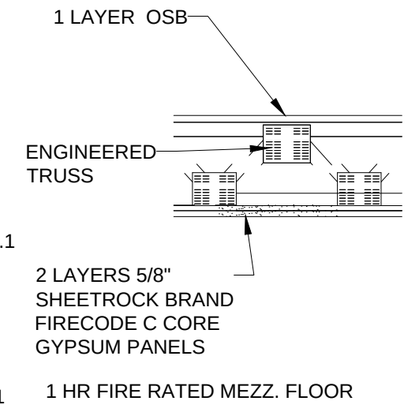


## 3 FLOOR DETAIL

SCALE: 3/32" = 1'-0" [11"X17"]
3/16" = 1'-0" [22"X34"]

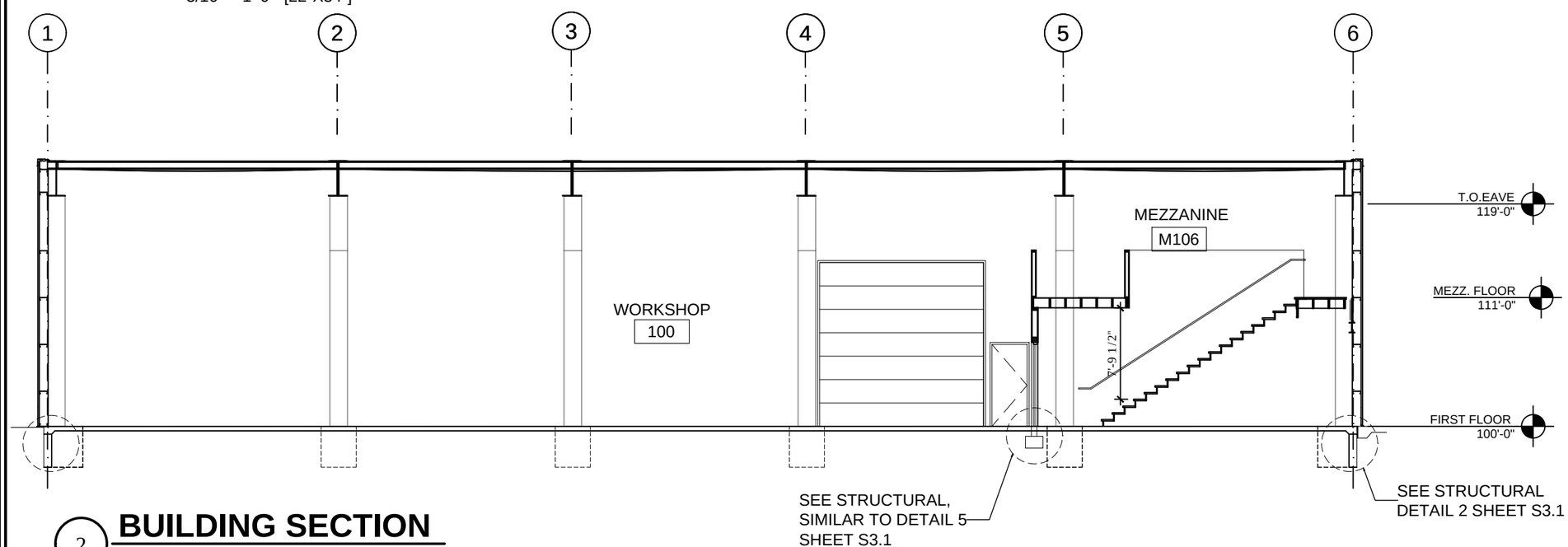


## 2 BUILDING SECTION

SCALE: 3/32" = 1'-0" [11"X17"]
3/16" = 1'-0" [22"X34"]

**REVIEW SET NOT FOR CONSTRUCTION**


Engineering International
(308) 340-5943
P.O.Box 401
402 Norris Avenue, Suite 107
McCook NE 69001-0401


**NEW (113' X 70) SCHOOL BUS BARN**
CHASE COUNTY SCHOOLS
**IMPERIAL, NEBRASKA**

BUILDING SECTIONS

DATE 3.23.2017

SCALE 3/32"=1'-0"

A2.0

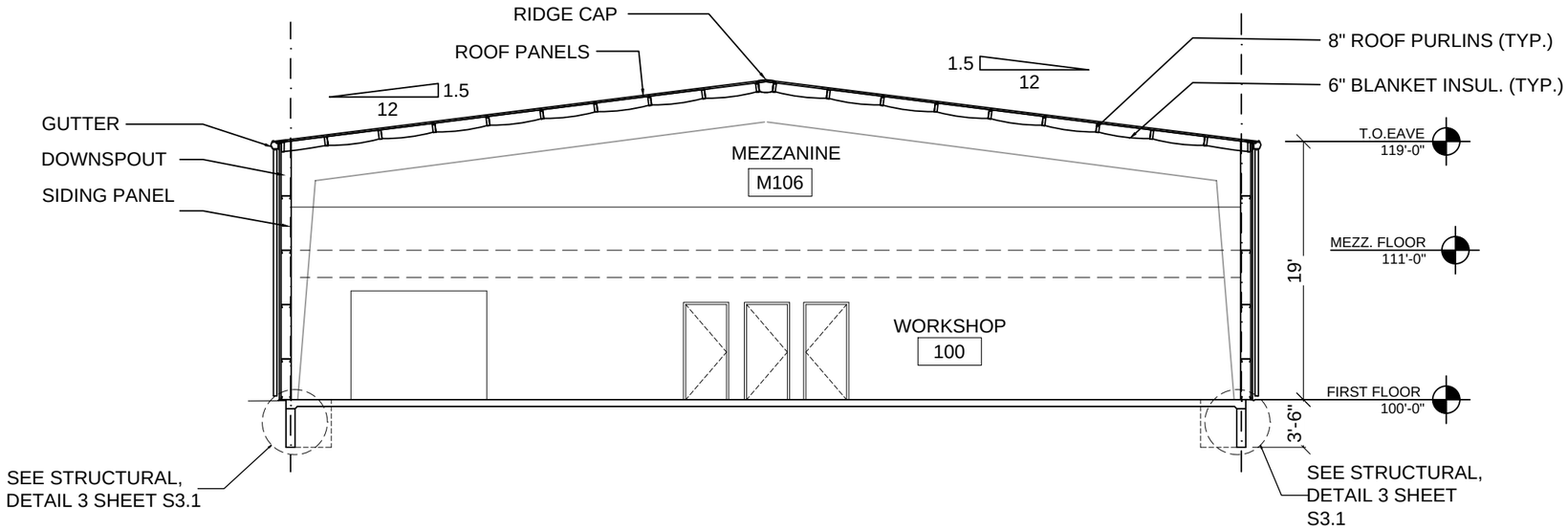


3 **BUILDING SECTION**

SCALE: 3/32" = 1'-0" [11"X17"]
3/16" = 1'-0" [22"X34"]

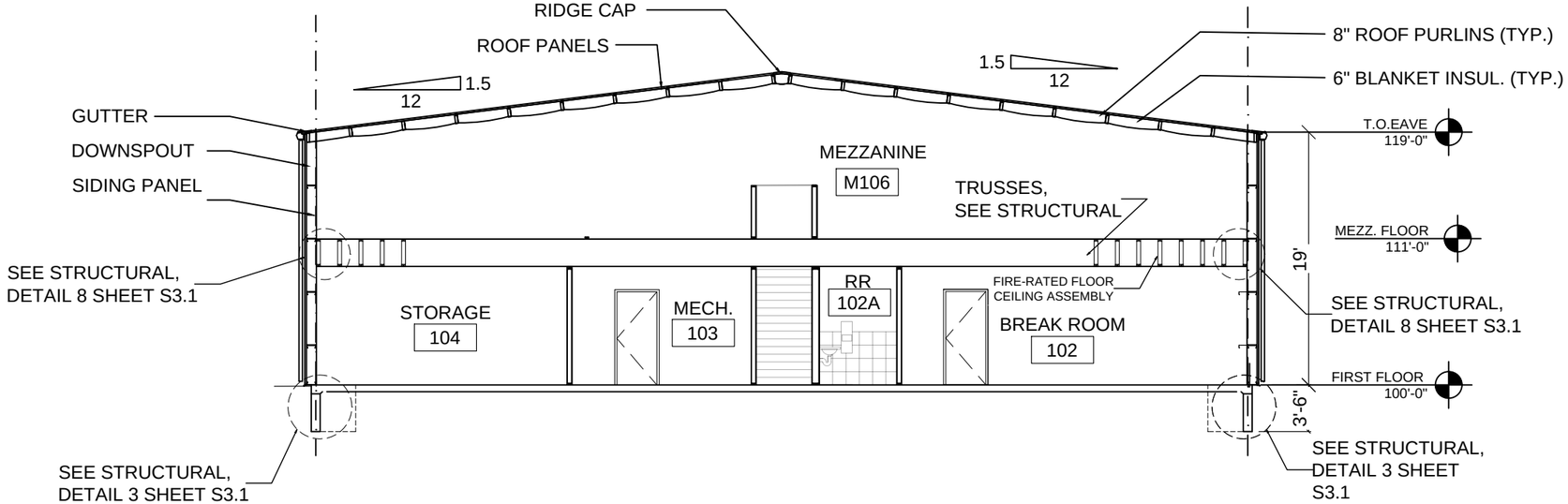


4 **BUILDING SECTION**

SCALE: 3/32" = 1'-0" [11"X17"]
3/16" = 1'-0" [22"X34"]

**REVIEW SET NOT FOR CONSTRUCTION**


Engineering International
(308) 340-5943
P.O. Box 401
402 Norris Ave. Suite 107
McCook NE 69001-0401


**NEW (113' X 70) SCHOOL BUS BARN**
CHASE COUNTY SCHOOLS
**IMPERIAL, NEBRASKA**

BUILDING SECTIONS

DATE 3.23.2017

SCALE 3/32"=1'-0"

A2.1

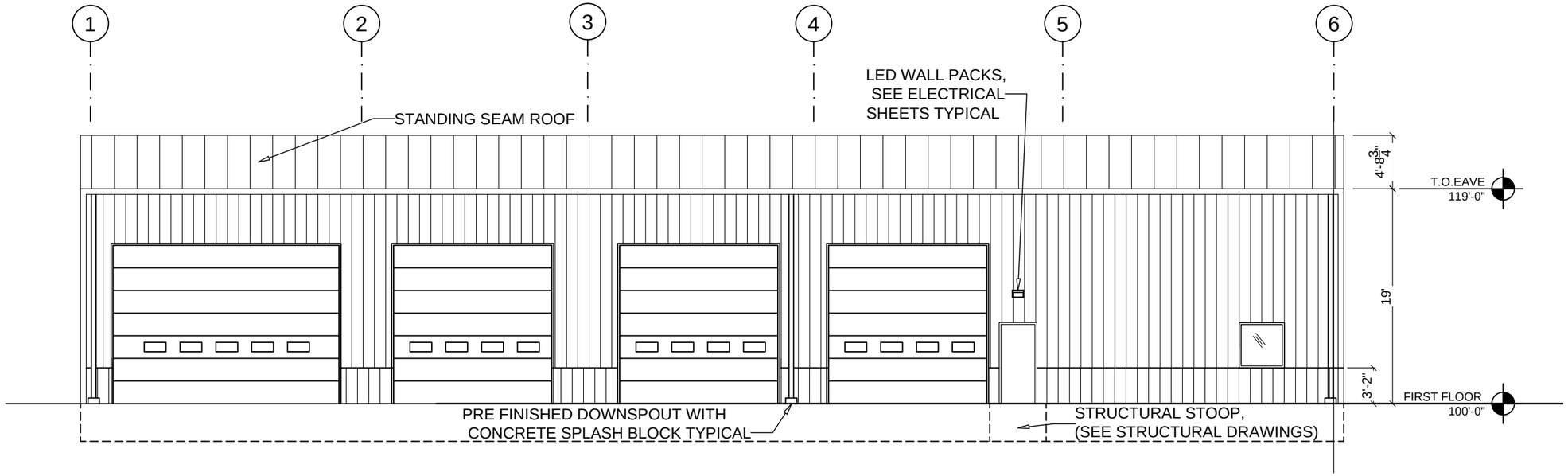


## 1 SOUTH ELEVATION

SCALE: 3/32" = 1'-0" [11"X17"]
3/16" = 1'-0" [22"X34"]

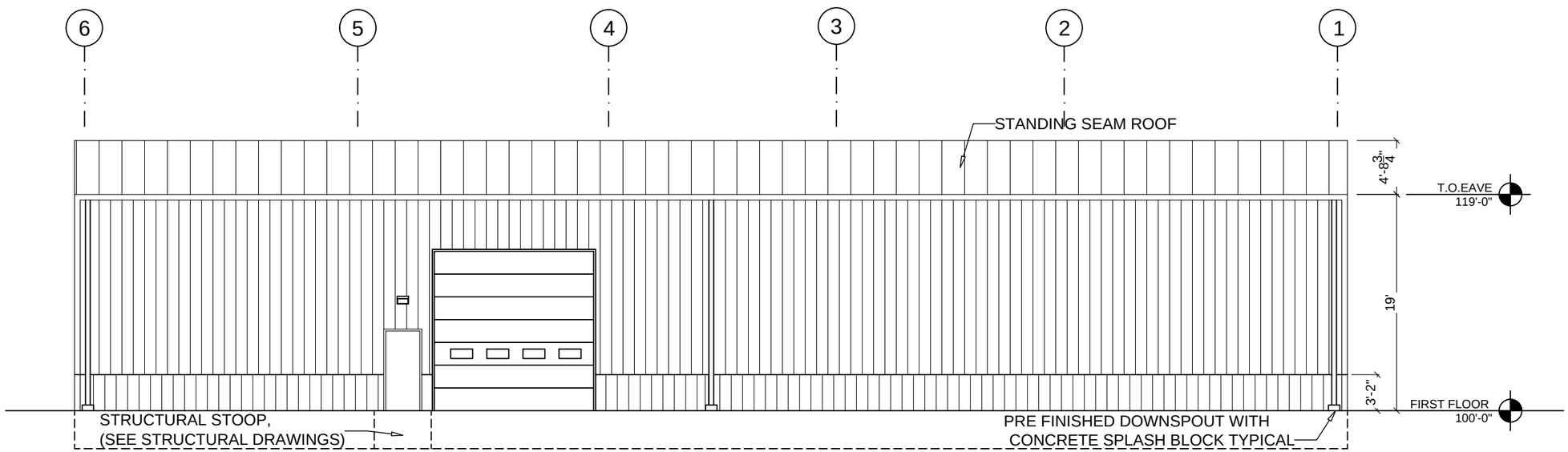


## 2 NORTH ELEVATION

SCALE: 3/32" = 1'-0" [11"X17"]
3/16" = 1'-0" [22"X34"]

**REVIEW SET**
**NOT FOR**
**CONSTRUCTION**


Engineering International
(308) 340-5963
P.O. Box 401
402 Norris Avenue, Suite 107
McCook NE 69001-0401


**NEW (113' X 70) SCHOOL BUS BARN**
CHASE COUNTY SCHOOLS
**IMPERIAL, NEBRASKA**

ELEVATIONS

DATE 3.23.2017

SCALE 3/32"=1'-0"

A3.0

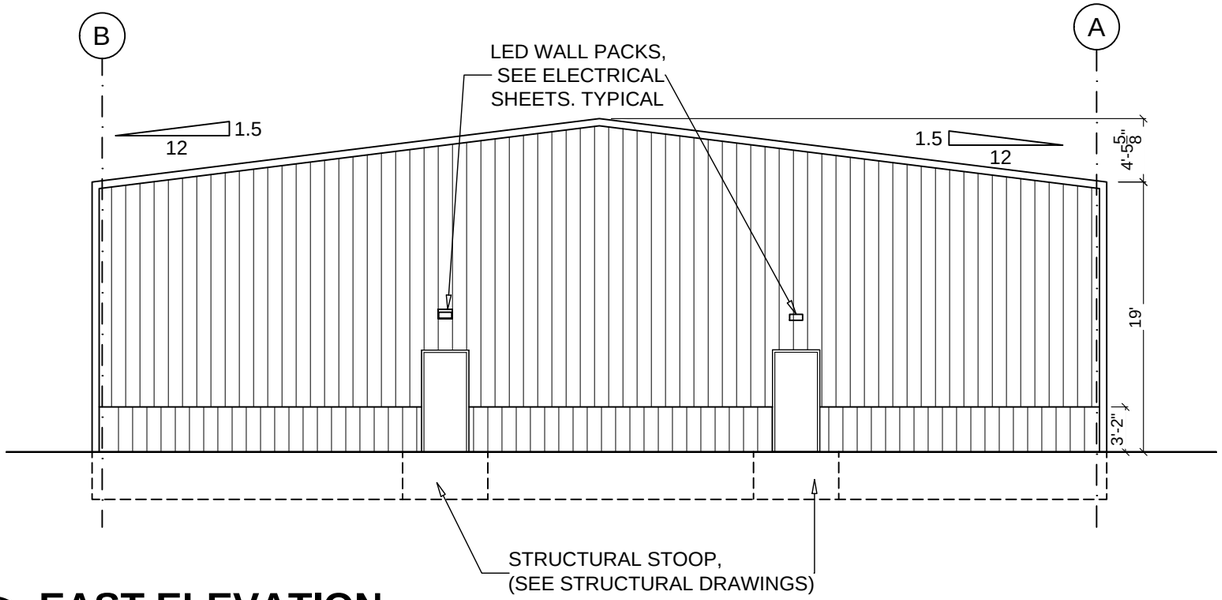


3 **EAST ELEVATION**

SCALE: 3/32" = 1'-0" [11"X17"]
3/16" = 1'-0" [22"X34"]

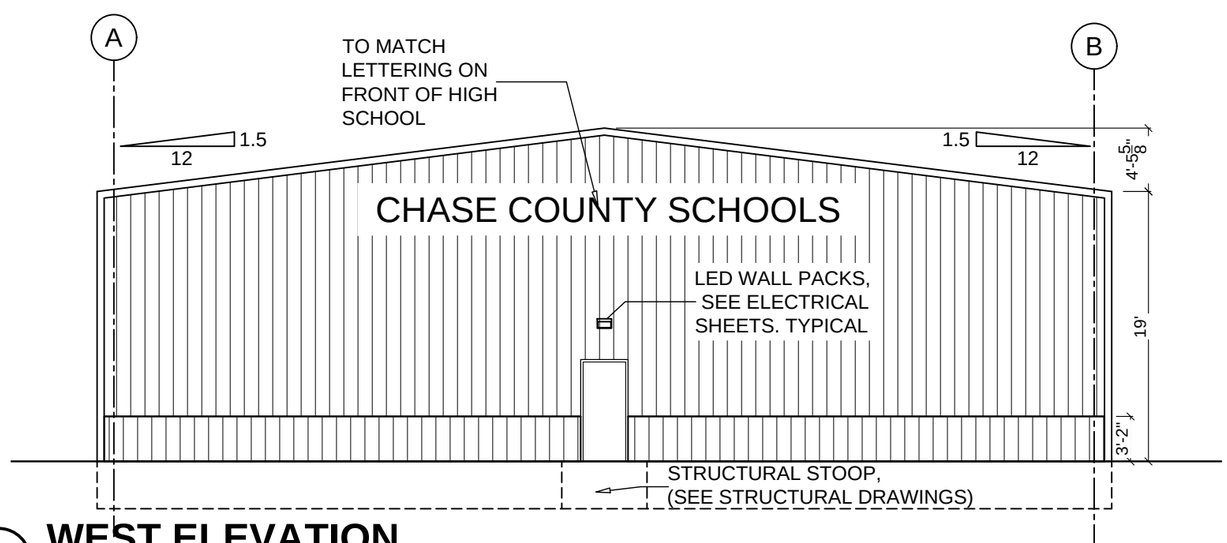


4 **WEST ELEVATION**

SCALE: 3/32" = 1'-0" [11"X17"]
3/16" = 1'-0" [22"X34"]

**REVIEW SET NOT FOR CONSTRUCTION**


Engineering International
(308) 340-5943
P.O.Box 401
402 North Adams, Suite 107
McCook NE 69001-0401


**NEW (113' X 70) SCHOOL BUS BARN**
CHASE COUNTY SCHOOLS
**IMPERIAL, NEBRASKA**

ELEVATIONS

DATE 3.23.2017

SCALE 3/32"=1'-0"

A3.1

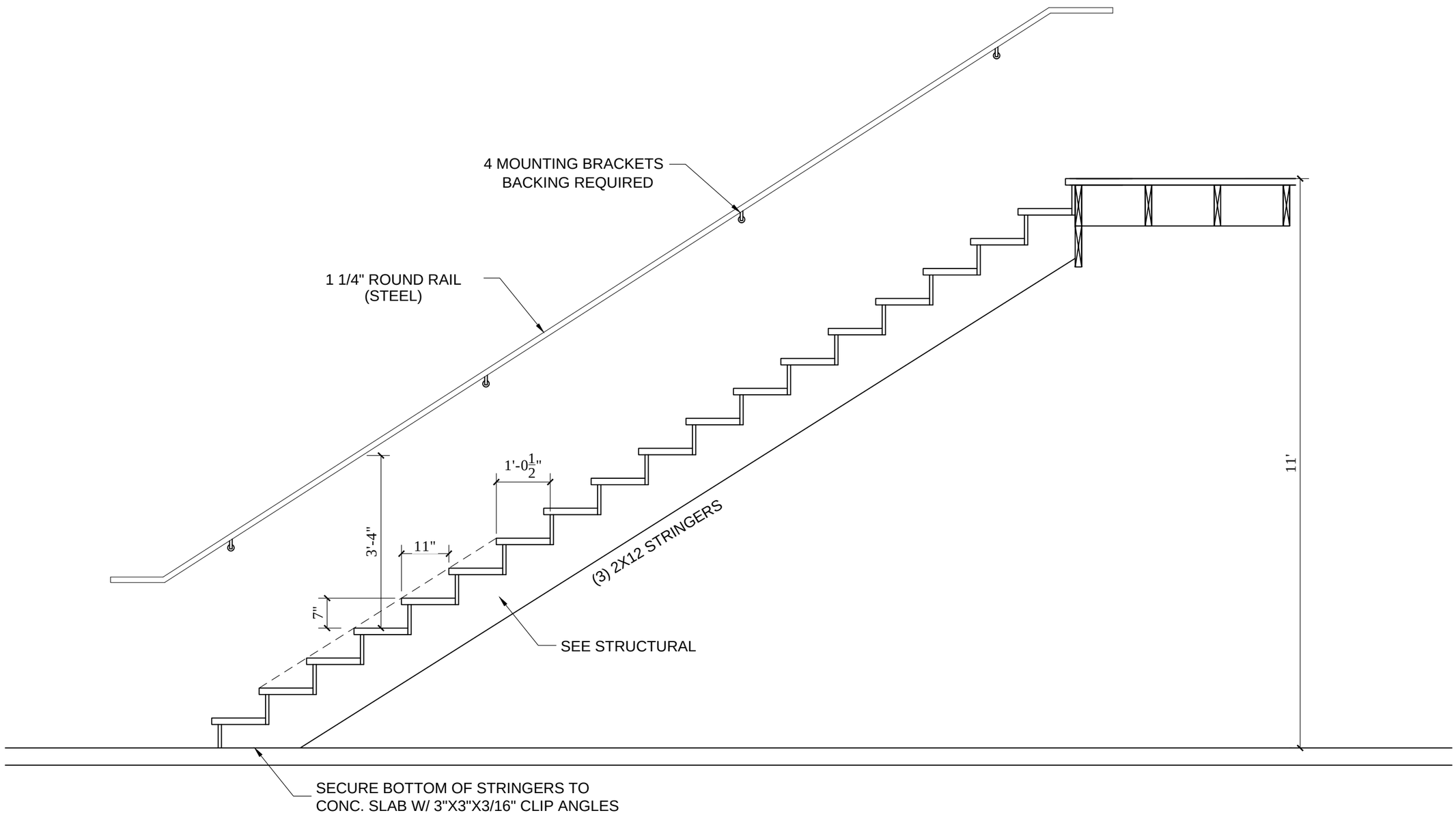


3

## STAIR DETAILS

SCALE: 1/2" = 1'-0" [11"X17"]
1" = 1'-0" [22"X34"]

**REVIEW SET**
**NOT FOR**
**CONSTRUCTION**


Engineering International
(308) 340-5943
P.O.Box 401
402 Norris Ave Suite 107
McCook NE 69001-0401


**NEW (113' X 70) SCHOOL BUS BARN**
CHASE COUNTY SCHOOLS
**IMPERIAL, NEBRASKA**

STAIR DETAIL

DATE 3.23.2017

SCALE 1/2"=1'-0"

A4.0

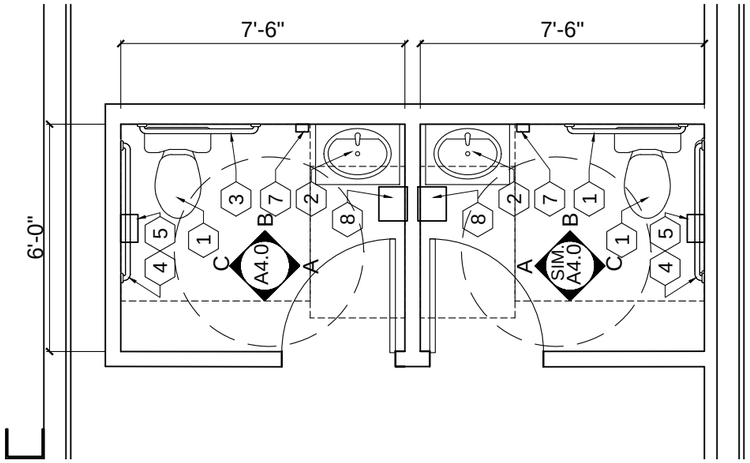


## 1 ENLARGED BATHROOMS PLAN

SCALE: 1/4" = 1'-0" [11"X17"]
1/2" = 1'-0" [22"X34"]

NOTE:
EXPOSED PIPES AND SURFACES. HOT WATER AND DRAIN PIPES UNDER LAVATORIES SHALL BE INSULATED OR OTHERWISE CONFIGURED TO PROTECT AGAINST CONTACT. THERE SHALL BE NO SHARP OR ABRASIVE SURFACES UNDER LAVATORIES.

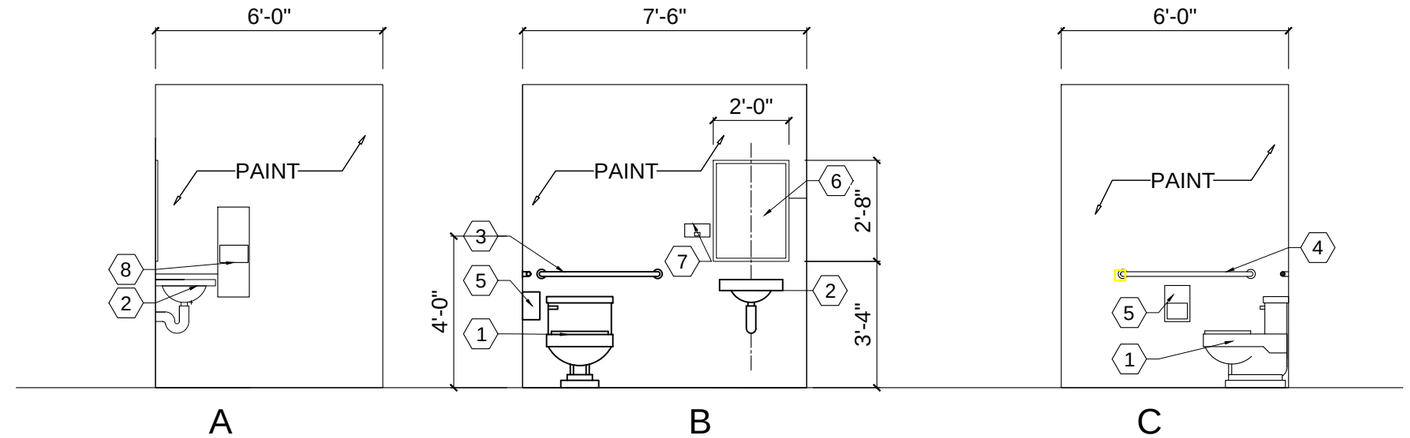


## 2 BATHROOM INTERIOR ELEVATIONS

SCALE: 1/4" = 1'-0" [11"X17"]
1/2" = 1'-0" [22"X34"]

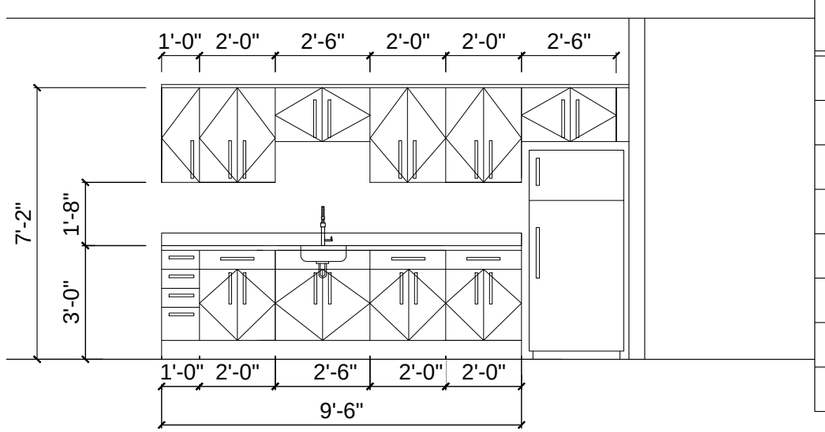


## 3 KITCHEN INTERIOR ELEVATION

SCALE: 1/4" = 1'-0" [11"X17"]
1/2" = 1'-0" [22"X34"]

## RESTROOM FIXTURES SCHEDULE

| # | ACCESSORY NAME | NOTES |
|---|---|---|
| 1 | WATER CLOSET | SEE PLUMBING SCHEDULE |
| 2 | LAVATORY | SEE PLUMBING SCHEDULE |
| 3 | GRAB BAR, 36" LONG | MOEN OR EQUAL |
| 4 | GRAB BAR, 42" LONG | MOEN OR EQUAL |
| 5 | TOILET TISSUE DISPENSER | BRADLEY OR EQUAL, RECESSED HINGED-HOOD STACKING ROLLS |
| 6 | MIRROR | BOBRICK OR EQUAL |
| 7 | SOAP DISPENSER | BOBRICK® MATRIXSERIES™ SURFACE MOUNTED SOAP DISPENSER - B-5050 OR EQUAL |
| 8 | PAPER TOWEL DISPENSER | BOBRICK OR EQUAL |

REVIEW SET
NOT FOR CONSTRUCTION


Engineering International
(308) 340-5943
P.O.Box 401
402 Norris Avenue
McCook NE 69001-0401


NEW (113' X 70) SCHOOL BUS BARN
CHASE COUNTY SCHOOLS
IMPERIAL, NEBRASKA

INTERIOR ELEVATIONS

DATE 3.23.2017

SCALE 1/4"=1'-0"

A4.1

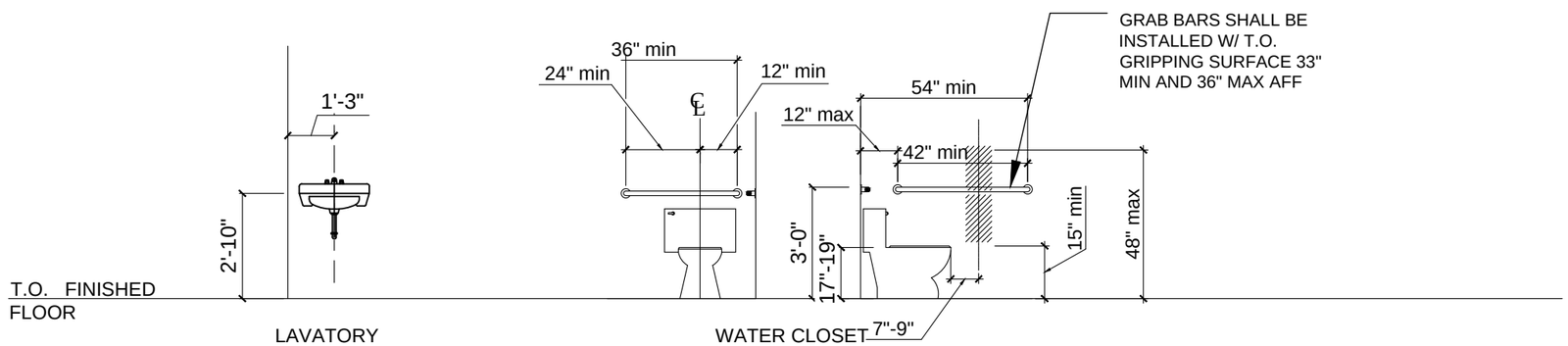


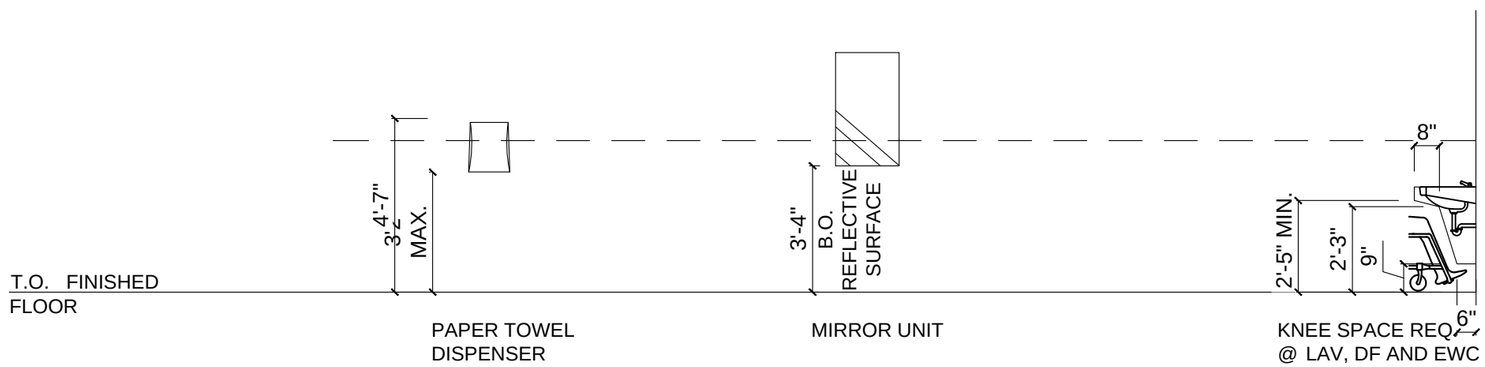


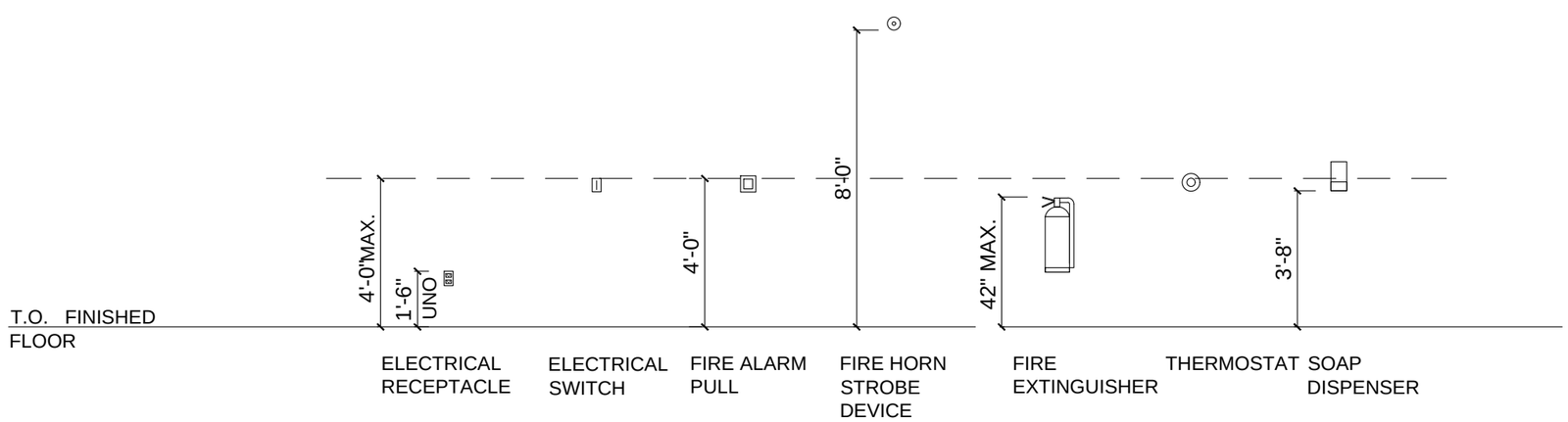


1

## MOUNTED HEIGHT LEGEND

SCALE: 1/4" = 1'-0" [11"X17"]
1/2" = 1'-0" [22"X34"]

## NOTES:

1. LEGEND INDICATES RECOMMENDED MOUNTING HEIGHTS. CONTRACTOR SHALL COORDINATE SPECIFIC MOUNTING HEIGHTS WITH MANUFACTURES' REQUIREMENTS FOR HANDICAPPED ACCESSIBILITY.
2. ACCESSORIES SHALL NOT PROJECT MORE THAN 4" FROM THE WALL IF THEIR LEADING EDGE IS BETWEEN 27" AND 80" ABOVE THE FINISH FLOOR
3. OPERABLE PARTS (CONTROLS) SHALL BE LOCATED A MINIMUM OF 15". AND A MAXIMUM OF 48", ABOVE THE FINISHED FLOOR.
4. PROVIDE SOLID BLOCKING BEHIND ALL WALL HUNG FIXTURES.
5. EXPOSED PIPES AND SURFACES. HOT WATER AND DRAIN PIPES UNDER LAVATORIES SHALL BE INSULATED OR OTHERWISE CONFIGURED TO PROTECT AGAINST CONTACT. THERE SHALL BE NO SHARP OR ABRASIVE SURFACES UNDER LAVATORIES.

**REVIEW SET NOT FOR CONSTRUCTION**


Engineering International
(308) 340-9943
P.O.Box 401
402 Norris Ave Suite 107
McCook NE 69001-0401


**NEW (113' X 70) SCHOOL BUS BARN**
CHASE COUNTY SCHOOLS
**IMPERIAL, NEBRASKA**

ACCESSIBLE FIXTURES AND ACCESSORIES

DATE 3.23.2017

SCALE N.T.S

A4.2

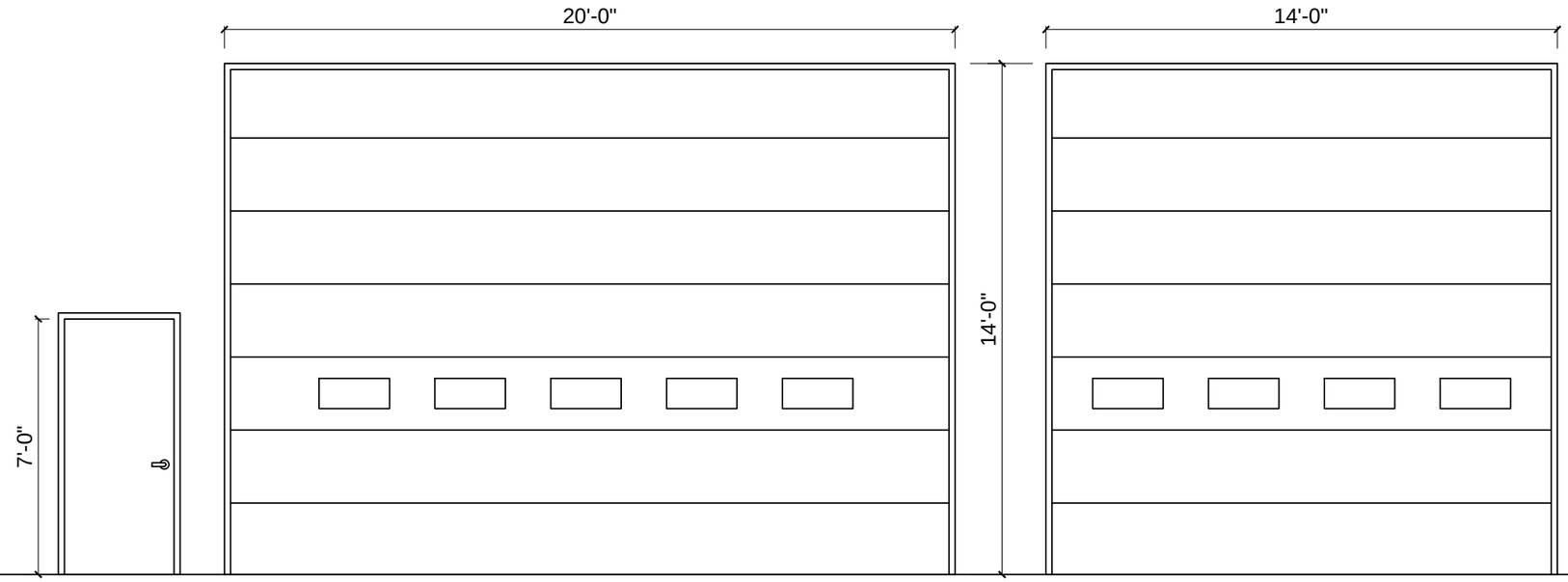


A

B

OVERHEAD DOOR - METAL

D

OVERHEAD DOOR - METAL

## DOOR NOTES:

1. PROVIDE SIGN IN 1" HIGH LETTERS STATING: "THIS DOOR IS TO REMAIN UNLOCKED WHEN BLDG IS OCCUPIED", AT EXTERIOR DOOR 1 AND DOOR 6.
2. REINFORCE JAMBS WITH WOOD BLOCKING.
3. PROVIDE HANDICAPPED ACCESSIBILITY DECAL.
4. CONTRACTOR TO PROVIDE AND INSTALL DOOR SWEEP ON ALL EXTERIOR DOORS TO PREVENT WATER, WIND AND DEBRIS INFILTRATION.

## GENERAL HARDWARE NOTES:

1. THRESHOLD AT EGRESS DOOR SHALL BE NO MORE THE 1/2" (MAX) HEIGHT AFF.
2. LOCK SETS TO BE SUCH THAT THE LOCKING DEVICE IS READILY DISTINGUISHABLE AS LOCKED.
3. LOCK SETS TO BE SUCH THAT DOOR IS OPERABLE BY SINGLE HANDED LEVER OPERATION FROM THE EGRESS SIDE WITHOUT THE USE OF A KEY OR SPECIAL KNOWLEDGE OR EFFORT.
4. CLOSER TO COMPLY WITH A.D.A. SECTION 4.13.10. & SHALL REQUIRE NO MORE THAN 5LBS OPENING FORCE AND MIN. 3 SEC TO CLOSE PANIC HARDWARE = RIM TYPE DEVICE.
5. ALL DOOR HARDWARE TO COMPLY W/ A.D.A. / N.A.G. 4.13.9, 4.13.10 AND 4.13.11 AND BE EITHER PUSH TYPE OR LEVER HANDLE, SINGLE HANDED OPERATION AND MOUNTED NO HIGHER THAN 48" A.F.F.
6. SWINGING DOOR GLASS MUST BE SAFETY GLASS.

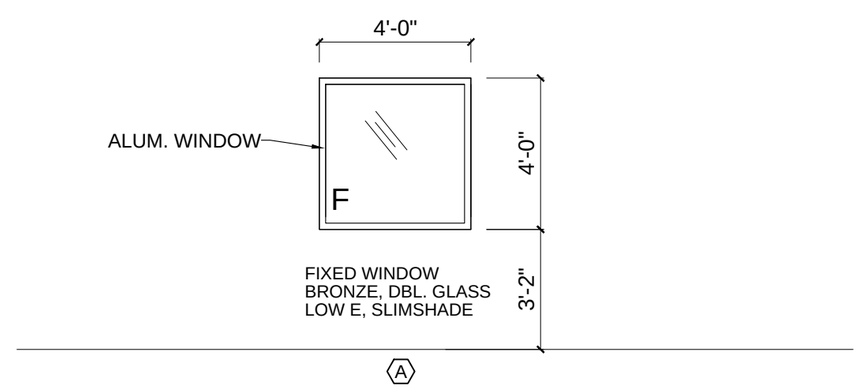


WINDOW TYPES

SCALE 1/4"=1'-0"

REVIEW SET
NOT FOR
CONSTRUCTION

Engineering International
(308) 340-5943
P.O.Box 401
402 North Adams Ave
McCook NE 69001-0401

NEW (113' X 70) SCHOOL BUS BARN
CHASE COUNTY SCHOOLS
IMPERIAL, NEBRASKA

DOOR SCHEDULE

DATE 3.23.2017

SCALE 1/4"=1'-0"

A5.0

# DOOR SCHEDULE

| NO. | DOOR SIZE | TYPE | DOOR MAT'L | FRAME MAT'L | FIRE RATE | HARDWARE: DEAD BOLT | LOCKSET | PRIVACY | PASSAGE | PUSH/PULL | PANIC | CLOSER | SMOKE SEAL | CARD STRIKE | THRESHOLD | MAG. HOLD | NOTES |
|---|---|---|---|---|---|---|---|---|---|---|---|---|---|---|---|---|---|
| **MAIN FLOOR** | | | | | | | | | | | | | | | | | |
| 1 | 3'-0" X 7'-0" | A | HM | HM | | | X | | | | | | | | X | | |
| 1A | 3'-0" X 7'-0" | A | HM | HM | | | X | | | | | | | | X | | |
| 2 | 3'-0" X 7'-0" | A | WD | HM | 45 | | | | X | | | X | | | | | |
| 3 | 3'-0" X 7'-0" | A | WD | HM | | | | | X | | | | | | | | |
| 3A | 3'-0" X 7'-0" | A | HM | HM | | | X | | | | | | | | X | | |
| 4 | 3'-0" X 7'-0" | A | WD | HM | 60 | | | | X | | | X | | | | | |
| 4B | 3'-0" X 7'-0" | A | HM | HM | | | X | | | | | | | | X | | |
| | | | | | | | | | | | | | | | | | |
| 6 | 3'-0" X 7'-0" | A | HM | HM | | | X | | | | | | | | X | | |
| 7 | 3'-0" X 7'-0" | A | WD | HM | | | | X | | | | | | | | | |
| 8 | 3'-0" X 7'-0" | A | WD | HM | | | | X | | | | | | | | | |
| 9 | 14'-0" X 14'-0" | B | ALUM. | | | | | | | | | | | | | | |
| 10 | 20'-0" X 14'-0" | B | ALUM. | | | | | | | | | | | | | | |
| 11 | 14'-0" X 14'-0" | B | ALUM. | | | | | | | | | | | | | | |
| 13 | 14'-0" X 14'-0" | B | ALUM. | | | | | | | | | | | | | | |
| 9A | 14'-0" X 14'-0" | B | ALUM. | | | | | | | | | | | | | | |

**REVIEW SET NOT FOR CONSTRUCTION**


Engineering International
(308) 340-5943
P.O.Box 401
402 Norris Ave Suite 107
McCook NE 69001-0401


**NEW (113' X 70) SCHOOL BUS BARN**
CHASE COUNTY SCHOOLS
**IMPERIAL, NEBRASKA**

DOOR SCHEDULE

DATE 3.23.2017

SCALE N.T.S

A5.1

# ROOM FINISH SCHEDULE

| ROOM NUMBER | ROOM NAME | FLOOR | | WALLS | | | | | | | | CEILING | | | NOTES |
|---|---|---|---|---|---|---|---|---|---|---|---|---|---|---|---|
| | | | | NORTH | | SOUTH | | WEST | | EAST | | | | | |
| | | Floor Mat'l | Base Mat'l | MAT. | FIN. | MAT. | FIN. | MAT. | FIN. | MAT. | FIN. | Material | Ceiling Fin | Height | |
| 100 | WORKSHOP | SEALED CONCRETE | NONE/VINYL | LINER | | LINER | | LINER | | GYP. BD. | PAINT | OPEN | | | |
| 101 | STAIR | SEALED CONCRETE | VINYL | GYP. BD. | PAINT | GYP. BD. | PAINT | GYP. BD. | PAINT | LINER | | | | | |
| 102 | BREAK ROOM | VINYL | VINYL | GYP. BD. | PAINT | LINER | | GYP. BD. | PAINT | LINER | | GYP. BD. | PAINT | 9'-0" | |
| 102A | MEN'S RESTROOM | SEALED CONCRETE | VINYL | GYP. BD. | PAINT | GYP. BD. | PAINT | GYP. BD. | PAINT | GYP. BD. | PAINT | GYP. BD. | PAINT | 9'-0" | |
| 102B | WOMEN'S RESTROOM | SEALED CONCRETE | VINYL | GYP. BD. | PAINT | GYP. BD. | PAINT | GYP. BD. | PAINT | GYP. BD. | PAINT | GYP. BD. | PAINT | 9'-0" | |
| 103 | MECHANICAL ROOM | SEALED CONCRETE | VINYL | GYP. BD. | PAINT | GYP. BD. | PAINT | GYP. BD. | PAINT | LINER | | GYP. BD. | PAINT | 9'-0" | |
| 104 | STORAGE | SEALED CONCRETE | VINYL | LINER | | GYP. BD. | PAINT | GYP. BD. | PAINT | LINER | | GYP. BD. | PAINT | 9'-0" | |
| | | | | | | | | | | | | | | | |
| M106 | STORAGE DECK | DECK SHEATHING | NONE | LINER | | LINER | | GYP. BD. | PAINT | LINER | | OPEN | | | |

REVIEW SET
NOT FOR
CONSTRUCTION


Engineering International
(308) 340-5943
P.O. Box 401
402 North Avenue A, Suite 107
McCook NE 69001-0401


NEW (113' X 70) SCHOOL BUS BARN
CHASE COUNTY SCHOOLS
IMPERIAL, NEBRASKA

ROOM FINISH SCHEDULE

DATE 3.23.2017

SCALE N.T.S

A5.2

# GENERAL STRUCTURAL

CONTRACT DOCUMENTS ARE INTENDED TO CONVEY THE STRUCTURAL DESIGN INTENT. THEY REPRESENT THE STRUCTURAL SYSTEMS, MATERIALS USED, TYPICAL DETAILS AND SPECIFIC DETAILS OF THE COMPLETED STRUCTURE. DETAILS MAY NEED TO BE ADAPTED BY THE CONTRACTOR, SUBCONTRACTOR, OR SUPPLIER IN SOME LOCATIONS. ANY DIVERGENCE FROM THESE DRAWINGS SHALL BE APPROVED BY THE ARCHITECT AND EOR AND SHALL BE CONSISTENT WITH THE DESIGN INTENT SHOWN.

1. GENERAL CONTRACTORS RESPONSIBILITIES INCLUDE BUT ARE NOT LIMITED TO:
   a. DETERMINE CONSTRUCTION SEQUENCE AND PROCEDURES.
   b. PROVIDING A SAFE JOBSITE FOR WORKERS, SUBCONTRACTORS, TESTING AND INSPECTION AGENCIES, AND DESIGN PROFESSIONALS.
   c. DESIGN AND INSTALLATION OF ALL SHORING AND TEMPORARY BRACING NECESSARY TO INSURE THE SAFETY OF THE BUILDING, IT'S COMPONENTS AND OCCUPANTS.
   d. VERIFY AND COORDINATE DIMENSIONS AND ELEVATIONS SHOWN IN THE DRAWINGS. IF DISCREPANCIES EXIST THE CONTRACTOR SHALL NOTIFY THE ARCHITECT PRIOR TO COMMENCING THAT PROCEDURE.
   e. COORDINATE THE LOCATION AND LOADS OF MECHANICAL AND OWNER EQUIPMENT WITH THE STRUCTURE. OPENINGS AND EQUIPMENT SHOWN IN THE DRAWINGS ARE REPRESENTATIVE OF EQUIPMENT THAT MAY BE USED ON THIS PROJECT AND WHAT WAS USED AS THE BASIS FOR THE STRUCTURAL DESIGN, AND BIDDING PURPOSES. DEVIATIONS SHALL BE APPROVED BY ARCHITECT AND EOR.
   f. PROTECTING FOUNDATIONS FROM FROST DURING CONSTRUCTION. REFER TO SOILS REPORT FOR FURTHER INFORMATION.
2. IF CONFLICTS EXIST IN THE CONSTRUCTION DOCUMENTS THE STRICTEST PROVISIONS SHALL GOVERN.
3. DETAILS SHOWN IN TYPICAL LOCATIONS SHALL APPLY TO ALL LOCATIONS WITH THE SAME OR SIMILAR CONDITIONS.

## REINFORCED CONCRETE

1. REFER TO DESIGN DATA.
2. ACI FIELD REFERENCE MANUAL, SP-15 SHALL BE FOLLOWED. AT LEAST ONE COPY SHALL BE AVAILABLE ON SITE DURING CONCRETING OPERATIONS.
3. PROVIDE CONTROL JOINTS IN SLAB ON GRADE AS INDICATED BY THE DRAWINGS. IF NO CONTROL JOINTS ARE SHOWN PROVIDE CONTROL JOINTS NO FURTHER THAN 36 TIMES THE SLAB THICKNESS (4" THICK SLAB = 12'-0). CONTROL JOINTS SHALL PROVIDE A SQUARE SECTION WITH THE LENGTH NO GREATER THAN 1 1/2 TIMES THE WIDTH.
4. ALL CIP AND CMU WALLS SHALL BE CONNECTED TO THE FOUNDATION WITH DOWELS THAT MATCH THE WALL REINFORCING SIZE AND SPACING.
5. REFER TO SCHEDULES FOR TYPICAL REINFORCING DETAILS.
6. REBAR SHALL BE SPLICED TO PROVIDE A MINIMUM LAP AS FOLLOWS. TOP BARS ARE HORIZONTAL REINFORCING THAT ARE PLACED WITH 12" OR MORE OF CONCRETE BELOW THE BAR.

| BAR SIZE | TYP BAR | TOP BAR |
|---|---|---|
| #3 | 19" | 24" |
| #4 | 25" | 32" |
| #5 | 31" | 40" |
| #6 | 37" | 48" |
| #7 | 54" | 70" |
| #8 | 62" | 80" |
| #9 | 70" | 91" |
| #10 | 79" | 102" |
| #11 | 87" | 113" |

7. PROVIDE CONCRETE COVER FOR ALL REINFORCING AS FOLLOWS
   a. CAST AGAINST AND PERMANENTLY EXPOSED TO EARTH _____ 3"
   b. EXPOSED TO EARTH OR WEATHER
      #6 BAR AND LARGER _____ 3"
      #5 BAR AND SMALLER _____ 1 1/2"
   c. INTERIOR EXPOSURE
      BEAMS & COLUMNS _____ 1 1/2"
      WALLS _____ 1 1/2"
      SLABS AND JOISTS _____ 3/4"
8. PROVIDE AN ADDITIONAL 2- #5 BARS AROUND ALL RECTANGULAR OPENINGS IN CIP WALLS AND 1- #5 BAR AROUND ALL RECTANGULAR OPENINGS IN CIP SLABS. ADDITIONAL BAR SHALL EXTEND 24" MINIMUM BEYOND THE OPENING.
9. ALL REBAR, EXCLUDING DOWELS INTO FOUNDATION, TO BE PROPERLY CHAIRED AND SECURED PRIOR TO PLACING OF CONCRETE. WET SETTING OF REBAR IS NOT PERMITTED

## METAL DECK

1. REFER TO DESIGN DATA.
2. GALVANIZE ALL DECKING UNLESS OTHERWISE INDICATED BY THE ARCHITECT. PROVIDE MANUFACTURERS STANDARD RUST INHIBITIVE PAINT ON ALL OTHER ACCESSORIES.
3. ALL METAL DECK OPENINGS SHALL BE REINFORCED. FOR OPENINGS LESS THAN 8" REINFORCE WITH 2" x 20 GAGE x 2'-8 STRAP EACH SIDE OF OPENING WELDED TO TOP OF DECK. FOR OPENINGS GREATER THAN 8" REFER TO METAL DECK ATTACHMENT SCHEDULE FOR DETAILS.

## STRUCTURAL STEEL

1. REFER TO DESIGN DATA.
2. FIELD CUTTING OR OTHER FIELD MODIFICATION TO THE STRUCTURAL STEEL SHALL NOT BE MADE WITHOUT PRIOR APPROVAL OF THE EOR.
3. SIZES OF FILLET WELDS NOT SHOWN SHALL CONFORM TO THE MINIMUM SIZES AS SPECIFIED BY AISC "SPECIFICATIONS FOR STRUCTURAL STEEL BUILDINGS."
4. PROVIDE TWO COATS OF ASPHALTIC PAINT ON ALL STRUCTURAL STEEL EXPOSED TO THE SOIL OR BELOW SLAB ON GRADE.

## STRUCTURAL LUMBER

1. REFER TO DESIGN DATA.
2. NAILING OF MEMBERS SHALL COMPLY WITH THE REQUIREMENTS OF IBC 2006 TABLE 2304.9.1 "FASTENING SCHEDULE."
3. UNLESS NOTED OTHERWISE NAILS CONNECTING FRAMING MEMBERS SHALL BE .131 x 3 1/2 P-NAILS. NAILS CONNECTING SHEATHING TO FRAMING MEMBERS SHALL BE .131 x 2 1/2 P-NAILS.
4. ALL CONNECTORS, NAILS, BOLTS, OR OTHER FASTENERS USED WITH ALL TREATED LUMBER AND PLYWOOD SHALL BE HOT DIPPED GALVANIZED OR STAINLESS STEEL ALLOYS 304 OR 316.
5. GLUE FLOOR SHEATHING TO FRAMING AND TONGUE GROVE JOINTS WITH ADHESIVES MEETING APA SPECIFICATIONS APG-01 AND APPLIED IN ACCORDANCE WITH MANUFACTURER'S RECOMMENDATIONS.
6. PROVIDE SOLID BLOCKING AT ALL JOIST AND RAFTER BEARING LOCATIONS.
7. PROVIDE DOUBLE STUDS AT ALL LINTEL AND BEAM BEARING SUPPORTS. REFER TO SCHEDULE.
8. CONTINUE ALL ADDITIONAL STUD FRAMING BELOW BEAMS OR GIRDERS TO THE FOUNDATION.

## WOOD TRUSSES

1. REFER TO DESIGN DATA.
2. TRUSS MANUFACTURER SHALL BE RESPONSIBLE FOR THE DESIGN OF TRUSS MEMBERS AND IT'S SYSTEM INCLUDING:
   a. DESIGN ALL PERMANENT BRACING REQUIRED FOR SLENDER TRUSS MEMBERS.
   b. DESIGN OF TRUSS AND/OR BRACING REQUIRED FOR OUT OF PLANE BENDING (i.e. GABLE ENDS)
   c. DESIGN WIND UPLIFT CONNECTIONS TO THE STRUCTURE.
   d. SUBMIT ERECTION DRAWINGS AND PIECE DETAILS SHOWING TRUSS LAYOUT, PROFILES, BRACING AND ATTACHMENTS.
   e. STAMPED CALCULATIONS PREPARED BY A PROFESSIONAL ENGINEER REGISTERED IN THE STATE OF THE PROJECT.
3. TRUSS MANUFACTURER AND ERECTOR SHALL COMPLY WITH THE FOLLOWING STANDARDS:
   a. ANSI/TPI 1 "NATIONAL DESIGN STANDARD FOR METAL PLATE CONNECTED WOOD TRUSS CONSTRUCTION."
   b. TPI HIB "COMMENTARY AND RECOMMENDATIONS FOR HANDLING INSTALLING AND BRACING METAL PLATE CONNECTED WOOD TRUSSES."
   c. TPI DSB "RECOMMENDED DESIGN SPECIFICATION FOR TEMPORARY BRACING OF METAL PLATE CONNECTED WOOD TRUSSES."

# DESIGN DATA

GOVERNING CODE:_____ 2015 INTERNATIONAL BUILDING CODE

## FOUNDATION SUBRADE:

A SOILS INVESTIGATION HAS NOT BEEN PERFOMED ON THIS SITE. THE CONTRACTOR SHALL ENGAGE A GEOTECHNICAL ENGINEER TO VERIFY THAT THE FOUNDATION SUBGRADE IS SUITABLE TO SUPPORT THE STRUCTURE BASED ON THE ASSUMED BEARING PRESSURE. THE GEOTECH SHALL SUBMIT A REPORT TO THE ARCH / E.O.R. WITH HIS FINDINGS AND RECOMENDATIONS IF THE SUBGRADE IS FOUND TO BE UNACCEPTABLE.

ASSUMED ALLOWABLE NET BEARING PRESSURE _____ 1500 PSF

## DESIGN LOADS:

BUILDING CATEGORY_____ II

LIVE LOADS:

ROOF:

GROUND SNOW (Pg)_____ 30 PSF
FLAT ROOF SNOW (Pf)_____ 25 PSF
SNOW EXPOSURE (Ce) _____ 1.0
THERMAL FACTOR (Ct) _____ 1.1
RAIN ON SNOW @ SLOPES < 1/2:12_____ 5 PSF
UNBALANCED SNOW LOADS_____ASCE 7 SEC. 7.6

FLOOR:

TYPICAL _____ 125 PSF

WIND LOADS:

WIND SPEED _____115 MPH
EXPOSURE _____ C

SEISMIC LOADS:

SITE CLASSIFICATION _____ D
SEISMIC DESIGN CATEGORY _____ A
$S_S$ _____ .069
$S_1$ _____ .035

## MATERIALS

### CONCRETE

28 DAY CONCRETE STRENGTHS
FOOTINGS _____ 4000 PSI
SLAB ON GRADE_____ 3500 PSI
SUPPORTED SLABS AND _____ 4000 PSI
STOOPS _____ 4000 PSI
REINFORCING BARS_____ASTM A615 GRADE 60
WELDED BARS AND ANCHORS_____ASTM A706 GRADE 60
WELDED WIRE FABRIC_____ASTM A185, CSA G30.5

### STRUCTURAL

W SHAPES_____ ASTM A992
ROLLED SHAPES & PLATES_____ ASTM A36
TUBES _____ASTM A500 GRADE B
PIPES _____ ASTM A53 TYPE E OR S
WELDING ELECTRODES_____ E700XX
BOLTS _____ ASTM A325
ANCHOR RODS_____ ASTM F1554, GRADE 55
EXPANSION BOLTS _____ HILTI KWIK BOLT 3 OR APPROVED EQUIV.
ADHESIVE ANCHORS _____ HILTI HIT HY 150 MAX OR APPROVED EQUIV.
SCREW ANCHORS _____ SIMPSON TITEN HD OR HILTI HUS-H
SLEEVE ANCHORS _____ HILTI HLC OR APPROVED EQUIV.

FASTENERS IN CONTACT W/ TREATED LUMBER_____ 304 OR 316 STAINLESS,GALVANIZED ASTM F2329 OR A153 OR APPROVED EQUIV.

### METAL

FORM DECK (STRUCT STOOPS)_____1 1/2" TYPE "C" 20 GAGE, GALV

### STRUCTURAL LUMBER

LOAD BEARING & EXT WALLS_____STUD GRADE, #3 OR BETTER SPF
LINTELS, JOIST & PLATES _____ #2 OR BETTER HEM FIR OR SPF
LUMBER IN CONTACT W/ CONCRETE OR MASONRY ACQ TREATED FOR GROUND CONTACT #2 OR BETTER SOUTHERN PINE
M/C (MAX) _____ 19%
MICROLAM BEAMS_____ Fb = 3100 PSI Fv = 285 PSI E = 2000 PSI
OSB FLOOR SHEATHING_____3/4" T&G APA RATED STURD-I-FLOOR 24" SPAN RATING
OSB ROOF SHEATHING _____ 5/8" EXPOSURE 1 40/20
OSB WALL SHEATHING _____ 1/2" EXPOSURE 1 32/16
FASTENERS_____REFER TO GENERAL NOTES

### WOOD TRUSSES

FLOOR DESIGN LOADS
TOP CHORD DEAD LOAD _____ 10 PSF
BOTTOM CHORD DEAD LOAD_____ 5 PSF
TOP CHORD LIVE LOAD _____REFER TO DESIGN LOADS
BOTTOM CHORD LIVE LOAD _____ 0 PSF
MAX LIVE LOAD DEFLECTION _____ L/480

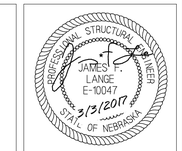


lange structural group
7230 Cornhusker Road
Lincoln, NE 68507
T: 402.421.0444 | F: 402.421.8780

Engineering International

SCHOOL BUS BARN
CHASE COUNTY, NEBRASKA

STRUCTURAL NOTES & DESIGN DATA

1/8" = 1'-0"

S-1.1

| MARK | WIDTH | DEPTH | REINFORCING |
|---|---|---|---|
| CF-1 | 1'-0 | 3'-4 | 2- #5 TOP & BOTTOM |
| CF-2 | 1'-8 | 1'-0 | 2- #5 BOTTOM |
| | | | |

CONTINUOUS FOOTING SCHEDULE

| MARK | PLAN | DEPTH | REINFORCING |
|---|---|---|---|
| F-1 | 3'-0 x 3'-0 | 3'-4 | 5- #5 EACH WAY, TOP & BOTTOM |
| F-2 | 4'-0 x 4'-0 | 3'-4 | 6- #5 EACH WAY, TOP & BOTTOM |
| F-3 | 5'-0 x 5'-0 | 3'-4 | 7- #5 EACH WAY, TOP & BOTTOM |

PAD FOOTING SCHEDULE

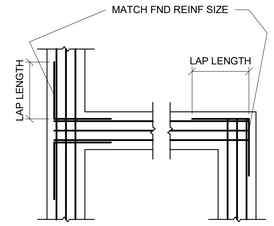


CORNER & INTERSECTION REINFORCING

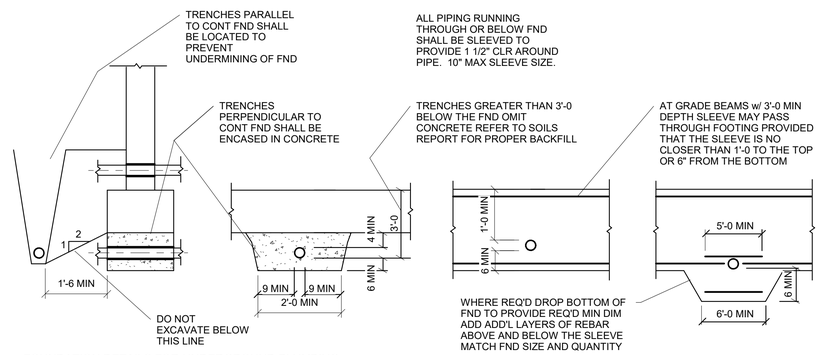


FOUNDATION DETAILS FOR UNDERGROUND PLUMBING

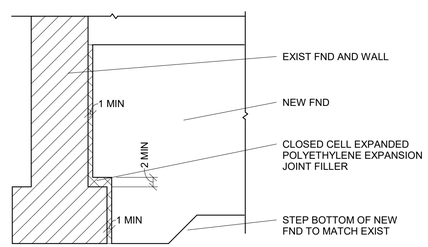


FOUNDATIONS ADJACENT TO EXIST STRUCTURES

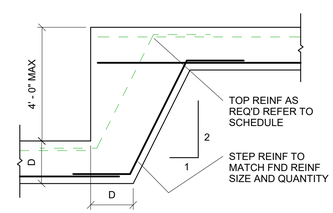


TYPICAL FOOTING STEP

## FOOTING SCHEDULE AND TYPICAL DETAILS

| MARK | TYPE | b (INCHES) | d (INCHES) | VERTICAL REINFORCING | x (INCHES) | TIE SIZE | TIE SPACING (INCHES) |
|---|---|---|---|---|---|---|---|
| P-1 | 2 | 12" | 18" | 2- #6 U-BARS | 13" | #3 | 3 @ 2.5" OC |
| P-2 | 4 | 12" | 18" | 2- #6 U-BARS | 13" | #3 | 3 @ 2.5" OC |
| | | | | | | | |

NOTES:

1. PROVICE 1 1/2" CLR SPACING FOR ALL TIES
2. CONTINUE WALL STEEL THRU ALL PILASTERS

U-BAR

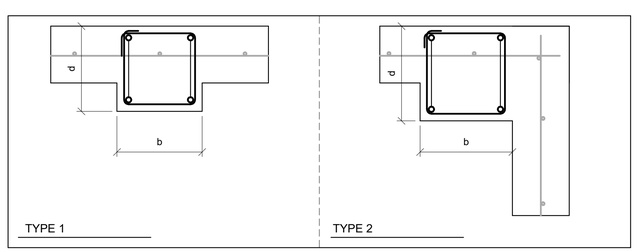


TYPE 1

TYPE 2

## PIER AND PILASTER SCHEDULE

| | NAILING SPACING | | | |
|---|---|---|---|---|
| LOCATION | SHEATHING | ROOF PERIMETER | PANEL EDGES | BLOCKING |
| FLOOR | 3/4" OSB | 6" OC | 6" OC | NOT REQ'D |
| | | | | |
| | | | | |

NOTES:

1. FASTENERS SHALL BE .131 x 2 1/2 P-NAILS
2. NAIL SHEATHING TO ALL INTERMEDIATE FRAMING @ 12" OC
3. PROVIDE 1/8" JOINT BETWEEN ALL PANELS FOR EXPANSION

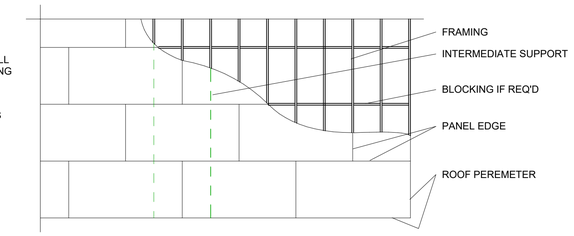


## FLOOR SHEATHING SCHEDULE

NUMBER OF 3/4" A325 BOLTS REQ'D PER BEAM CONNECTION

| BEAM | w8 | w10 | w12 | w14 | w16 | w18 | w21 | w24 | w27 | w30 | w33 | w36 |
|---|---|---|---|---|---|---|---|---|---|---|---|---|
| 2" COPE | 2 | 2 | 3 | 3 | 4 | 5 | 5 | 6 | 6 | 7 | 8 | 9 |
| 4 1/2" COPE | - | - | 2 | 2 | 3 | 4 | 5 | 6 | 6 | 7 | 8 | 9 |

NOTES:

1. ALL PRIMARY BEAM CONNECTIONS SHALL USE DBL ANGLE OR DBL PLATE CONNECTIONS

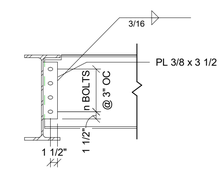


SINGLE PLATE CONNECTION (SP)

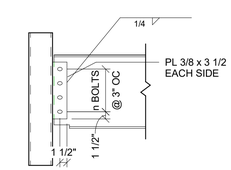


DOUBLE PLATE CONNECTION (DP)

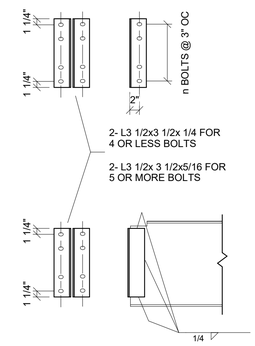


DOUBLE ANGLE CONNECTION (DA)

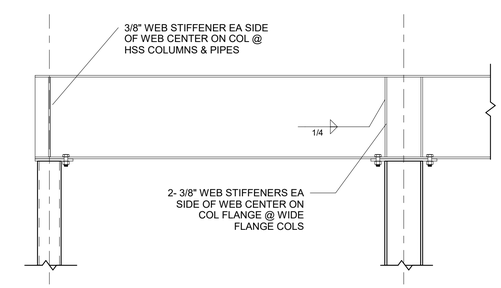


BEAM FRAMES OVER COLUMN

## BEAM CONNECTION SCHEDULE AND TYPICAL DETAILS

| OPENING WIDTH | HEADER | JACK STUDS | KING STUDS (EA SIDE) |
|---|---|---|---|
| L-1 | 4-2x8 | 2 | 1 |
| L-2 | 3-1.75x11.25 LVL | 3 | 1 |

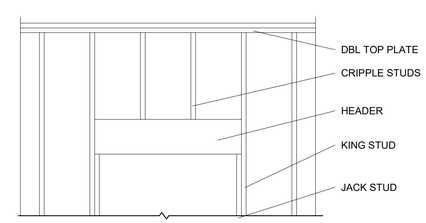


## TYPICAL WOOD OPENING SCHEDULE

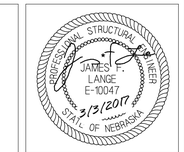


lange structural group

Engineering International

SCHOOL BUS BARN
CHASE COUNTY, NEBRASKA

STRUCTURAL SCHEDULES

AS INDICATED

S-1.2

UPPER SET OF GRID LINES ARE BASED ON THE OPTION 2 PEMB DESIGN

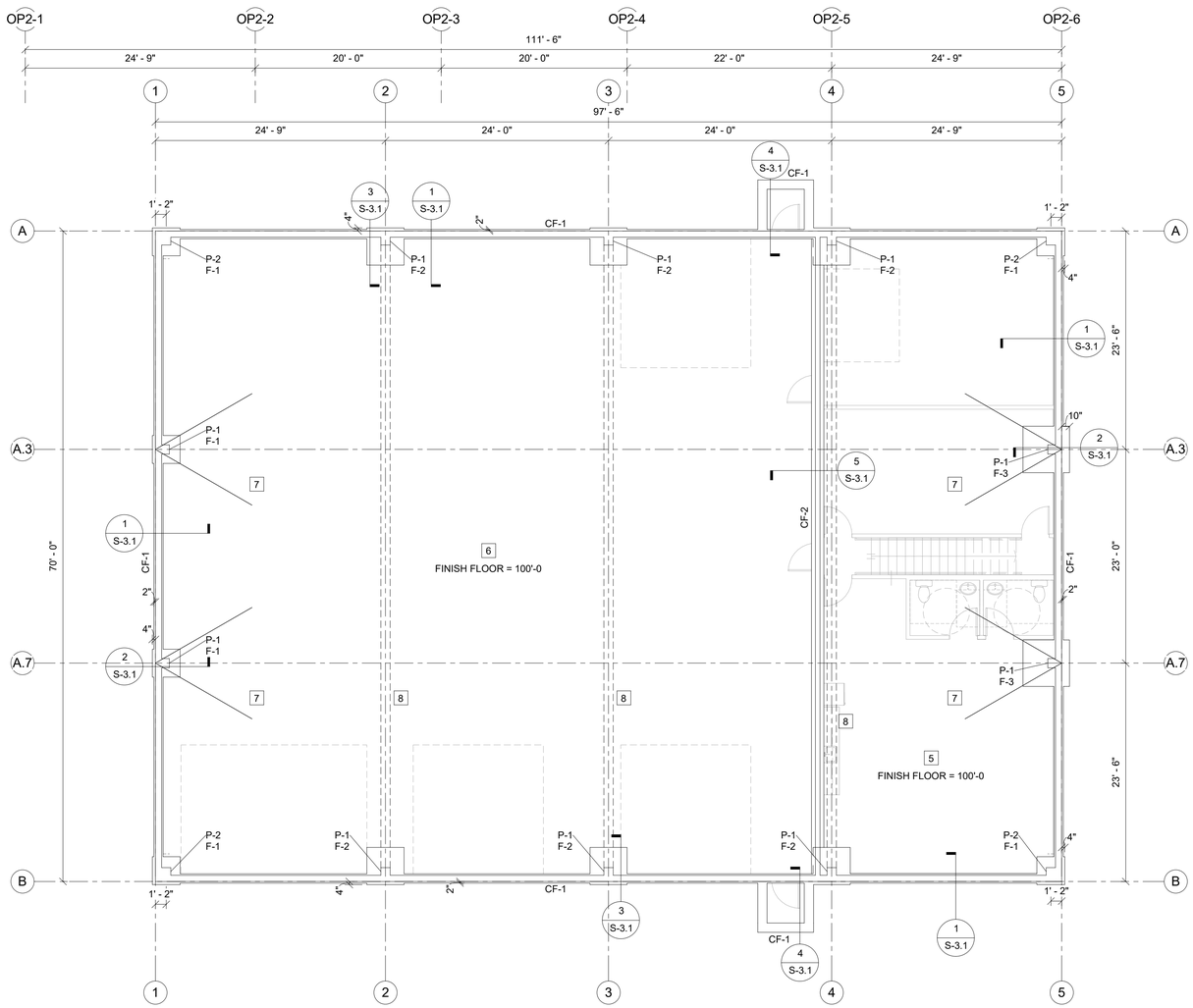


1 FOUNDATION PLAN
SCALE: 1/16" = 1'-0" [11"X17"]
1/8" = 1'-0" [22"X34"]

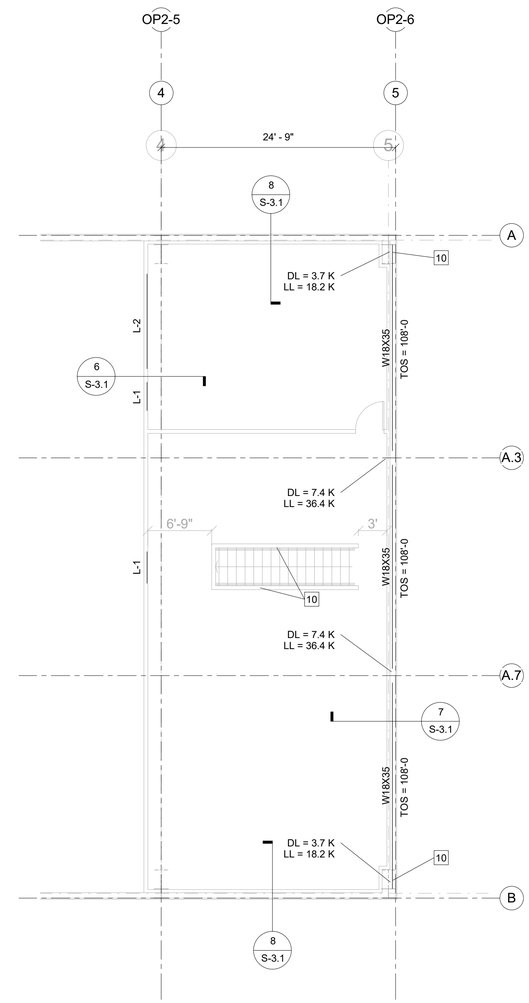


2 MEZZANINE FRAMING
SCALE: 1/16" = 1'-0" [11"X17"]
1/8" = 1'-0" [22"X34"]

NOTES

1. REFER TO DESIGN DATA, SCHEDULES & TYP DETAILS
2. # INDICATES SHEET NOTE REFER TO PLAN FOR LOCATION
3. TOF = 99'-4 UNLESS NOTED OTHERWISE
4. COLUMN SCHEDULE GUIDE
   C-1 COLUMN MARK
   BP-1 BASE PLATE MARK
   F-1 FOOTING MARK
   99'-4 TOP OF FOOTING

5. 4" CONCRETE ON PROPERLY PREPARED SUBGRADE REFER TO SOILS REPORT. REINFORCE w/ 6x6-w1.4xw1.4 WWF. REFER TO ARCH FOR VAPOR BARRIER.

6. 6" CONCRETE ON PROPERLY PREPARED SUBGRADE REFER TO SOILS REPORT. REINFORCE w/ #4 @ 16" OC EA WAY. REFER TO ARCH FOR VAPOR BARRIER.

7. #4x12'-0 LAP w/ V-BAR

8. 1'-4x8" THICKENED SLAB REINF w/ 2-#6 BOTTOM

9. TRUSS SUPPLIER TO PROVIDE MECHANICAL CHASE FOR DUCT WORK, COORDINATE WITH MECHANICAL

10. PEMB SUPPLIER TO PROVIDE OUTRIGGER TO SUPPORT MEZZANINE BEAM REFER TO PLAN FOR BEAM SIZE AND LOCATION

11. ATTACH STAIR STRINGER TO SIDE WALLS OF STAIRS w/ LEDGERLOCK SCREWS @ EA STUD

12. OPTION 2 GRIDS SHOWN ABOVE OPTION 1 DRAWING, FOR OPTION 2 SHIFT GRIDLINE 1 OUT TO OP2-1, COPY GRIDLINE 2 TO OP2-2 AND ADJUST REMAINING GRIDLINES TO MATCH OPTION 2 REMAINING GRIDLINES

METAL BUILDING
ANCHOR BOLT SCHEDULE

| SIZE | EMBED INTO FND |
|---|---|
| 1/2" | 15" |
| 5/8" | 15" |
| 3/4" | 18" |
| 7/8" | 21" |
| 1" | 24" |

ANCHOR BOLTS SHALL BE ASTM F1554, GRADE 55 STRAIGHT THREADED ROD w/ NUT TACK WELDED TO EMBED END

PROFESSIONAL STRUCTURAL ENGINEER
JAMES F. LANGE
E-10047
3/13/2017
STATE OF NEBRASKA

lange structural group
7225 Cornhusker Road
Lincoln, NE 68505
T: 402.420.0484 | F: 402.421.8186

Engineering International

SCHOOL BUS BARN
CHASE COUNTY, NEBRASKA

FOUNDATION & MEZZANINE PLAN

AS INDICATED

S-2.1

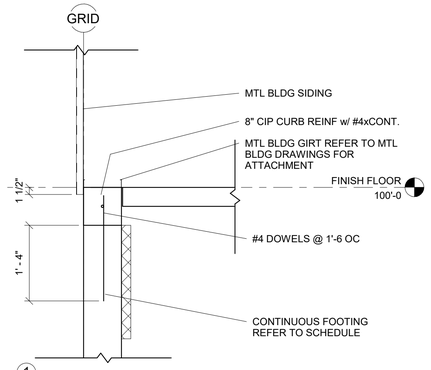


1 SCALE: 3/8" = 1'-0" [11"X17"]
3/4" = 1'-0" [22"X34"]

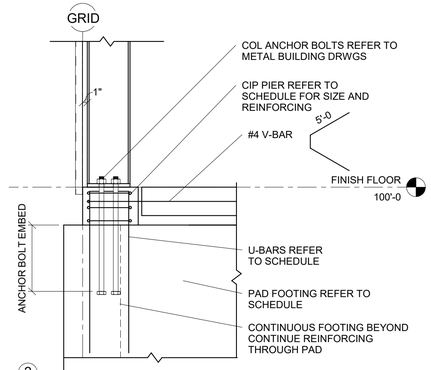


2 SCALE: 3/8" = 1'-0" [11"X17"]
3/4" = 1'-0" [22"X34"]

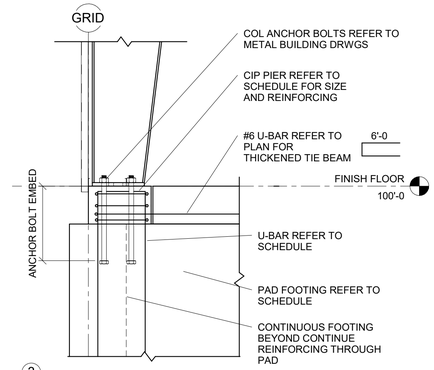


3 SCALE: 3/8" = 1'-0" [11"X17"]
3/4" = 1'-0" [22"X34"]

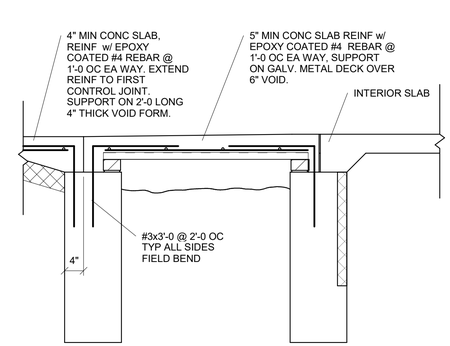


4 SCALE: 3/8" = 1'-0" [11"X17"]
3/4" = 1'-0" [22"X34"]

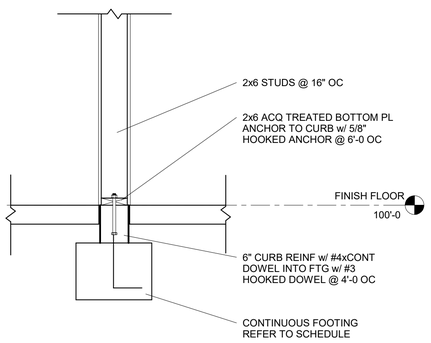


5 SCALE: 3/8" = 1'-0" [11"X17"]
3/4" = 1'-0" [22"X34"]

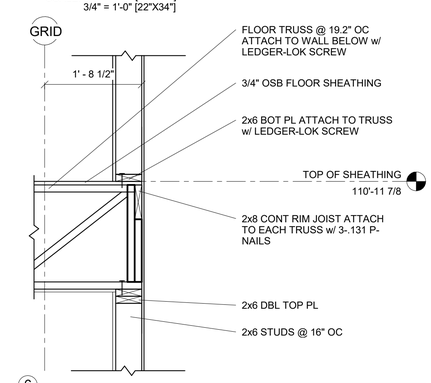


6 SCALE: 3/8" = 1'-0" [11"X17"]
3/4" = 1'-0" [22"X34"]

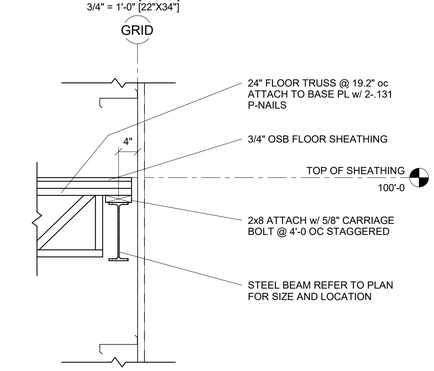


7 SCALE: 3/8" = 1'-0" [11"X17"]
3/4" = 1'-0" [22"X34"]

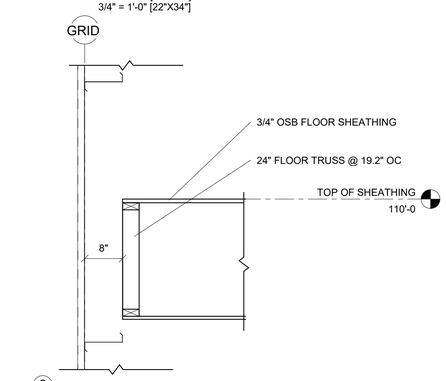


8 SCALE: 3/8" = 1'-0" [11"X17"]
3/4" = 1'-0" [22"X34"]

PROFESSIONAL STRUCTURAL ENGINEER
JAMES F. LANGE
E-10047
3/31/2017
STATE OF NEBRASKA

lange structural group
7230 Cornhusker Road
Lincoln, NE 68507
T: 402.420.0444 | F: 402.421.8780

Engineering International

SCHOOL BUS BARN
CHASE COUNTY, NEBRASKA

DETAILS

3/4" = 1'-0"

S-3.1

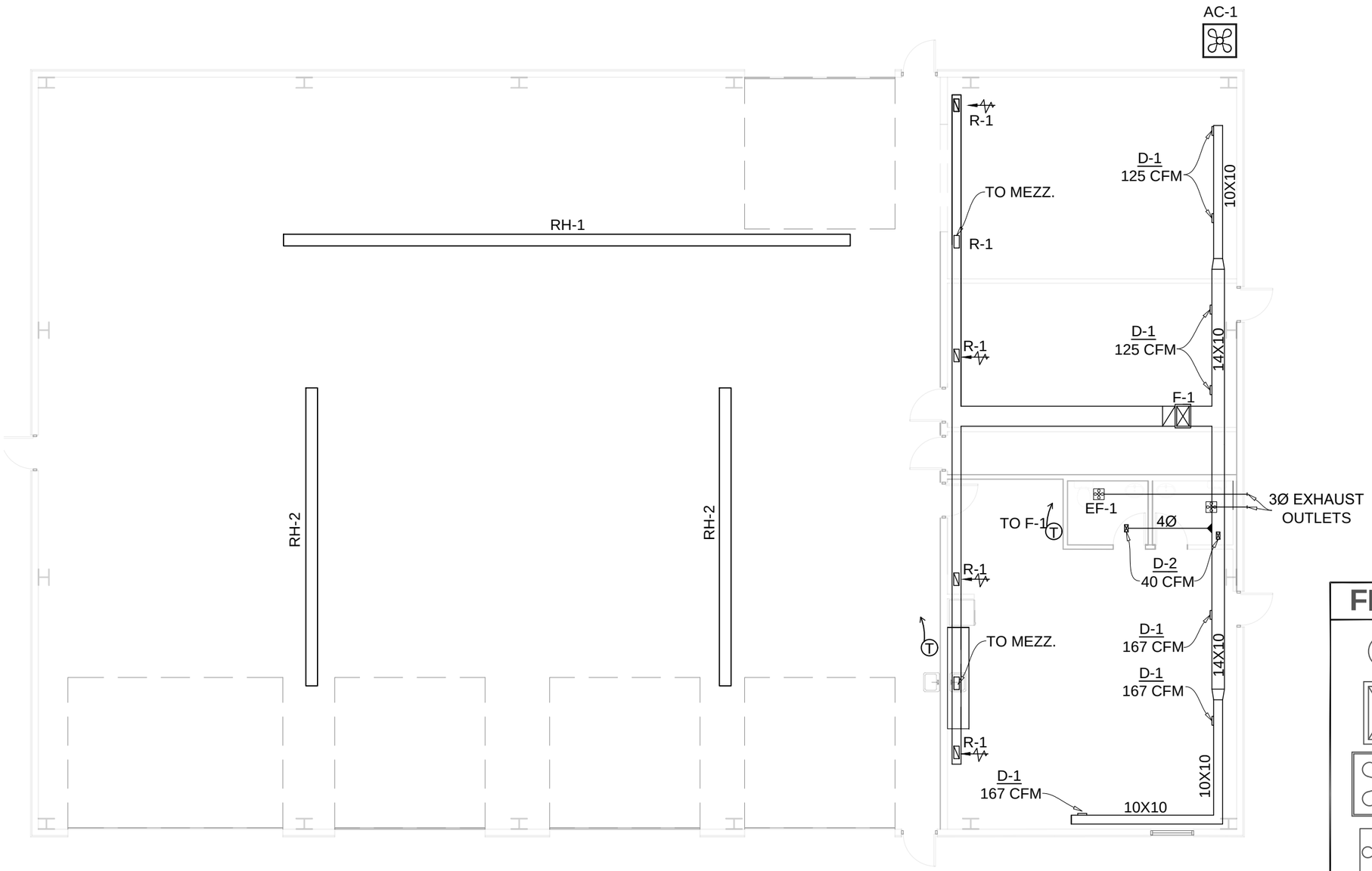


## LEGEND

| FIXT. | DESCRIPTION |
|---|---|
| T | THERMOSTAT |
| | FURNACE F-1 |
| | AC UNIT AC-1 |
| | EXHAUST FAN EF-1 |
| | RETURN GRILLE |
| | SUPPLY DIFFUSER |

1 **MECH. FLOOR PLAN**

SCALE: 3/32" = 1'-0" [11"X17"]
3/16" = 1'-0" [22"X34"]

NORTH

## MECHANICAL GENERAL NOTES:

1. SUPPLY DUCTWORK IS LOCATED ON EAST SIDE OF BUILDING, UNDER CEILING SHEET ROCK
2. RETURN DUCT IS LOCATED ON WEST SIDE OF BREAK/STORAGE/MECH ROOMS, UNDER CEILING SHEET ROCK
3. ALL PENETRATIONS THROUGH RATED WALL AND CEILING ASSEMBLIES NEED TO HAVE FIRE DAMPERS
4. CONTRACTOR MAY RESIZE DUCTWORK PROVIDED THE CROSS-SECTIONAL AREA IS NOT REDUCED
5. MAINTAIN LESS THAN 500 FPM IN BRANCH DUCTS AND 750 FPM IN PLENUMS
6. DUCTED UNITS SHALL HAVE A MINIMUM OF 30" OF LINED DUCT AT BOTH THE DISCHARGE AND SUCTION SIDE (8"X34" TYP.)
7. PROVIDE MANUAL BALANCING DAMPER ON ALL BRANCH DUCTS

**REVIEW SET NOT FOR CONSTRUCTION**

Engineering International
(308) 340-5963
P.O. Box 401
1402 Norris Avenue, Ste 27
McCook, NE 69001-0401

NEW (110' X 70') SCHOOL BUS BARN
CHASE COUNTY SCHOOLS
IMPERIAL, NE

MECH. FLOOR PLAN

DATE 3.23.2017

SCALE 3/32"=1'-0"

M1.0

## DIFFUSER / REGISTER SCHEDULE

| DESIGNATION | MANUFACTURER | MODEL # | MOUNT | COLOR | QUANT. | SIZE | REMARKS |
|---|---|---|---|---|---|---|---|
| D-1 | AMERICAN METAL | 456B4X8 | FL/CLG | WH | 2 | 4X8 | |
| D-2 | AMERICAN METAL | 413W4X10 | FL/CLG | WH | 7 | 4X10 | |
| R-1 | AMERICAN METAL | 375W14X6 | FL/CLG | WH | 4 | 14X6 | |

## MECHANICAL SCHEDULE

| DESIGNATION | MANUFACTURER | MODEL # | SUPPLY REQ. | REMARKS |
|---|---|---|---|---|
| F-1 | GOODMAN | GMVC960803BN, OR APPROVED EQUAL | 7.8 A, 1/2HP MOTOR | 2 TON, 96 AFUE, BLOWER @ 1000 CFM MEDIUM, 80 MBH, FILTER SIZE: 16X25 |
| AC-1 | GOODMAN | GSX140241, OR APPROVED EQUAL | 208/230V-1PH-60Hz | GOODMAN COIL#CAPF3636B6, 2 TON, FUELESS DISCONNECT, CONDENSING UNIT R410A, LIQUID LINE: $\frac{3}{8}$", SUCTION LINE: $\frac{3}{4}$", 14 SEER |
| RH-1 | SPACE RAY | LTS 180-50 N5, OR APPROVED EQUAL | $\frac{1}{2}$" GAS INLET | 180 MBH |
| RH-2 | SPACERAY | LTS 50 25 N5, OR APPROVED EQUAL | $\frac{1}{2}$" GAS INLET | 50 MBH EACH |
| EF-1 | BROAN | 670 CEILING/WALL FANS, OR APPROVED EQUAL | 120V | PROVIDE WITH OUTSIDE LOUVER, 3.4 S.P SONES, 41 CFM @.375 Ps |
| LFT-1 | -- | -- | -- | LIFT PROVIDED BY OWNERS |
| PW-1 | -- | -- | -- | POWER WASHER PROVIDED BY OWNERS |

REVIEW SET
NOT FOR
CONSTRUCTION

Engineering International
(308) 340-5963
P.O. Box 431
402 Norris Ave., Suite 407
McCook NE 69001-0401

NEW (110' X 70') SCHOOL BUS BARN
CHASE COUNTY SCHOOLS
IMPERIAL, NE

MECHANICAL SCHEDULES

DATE 3.23.2017

SCALE 3/32"=1'-0"

M1.2

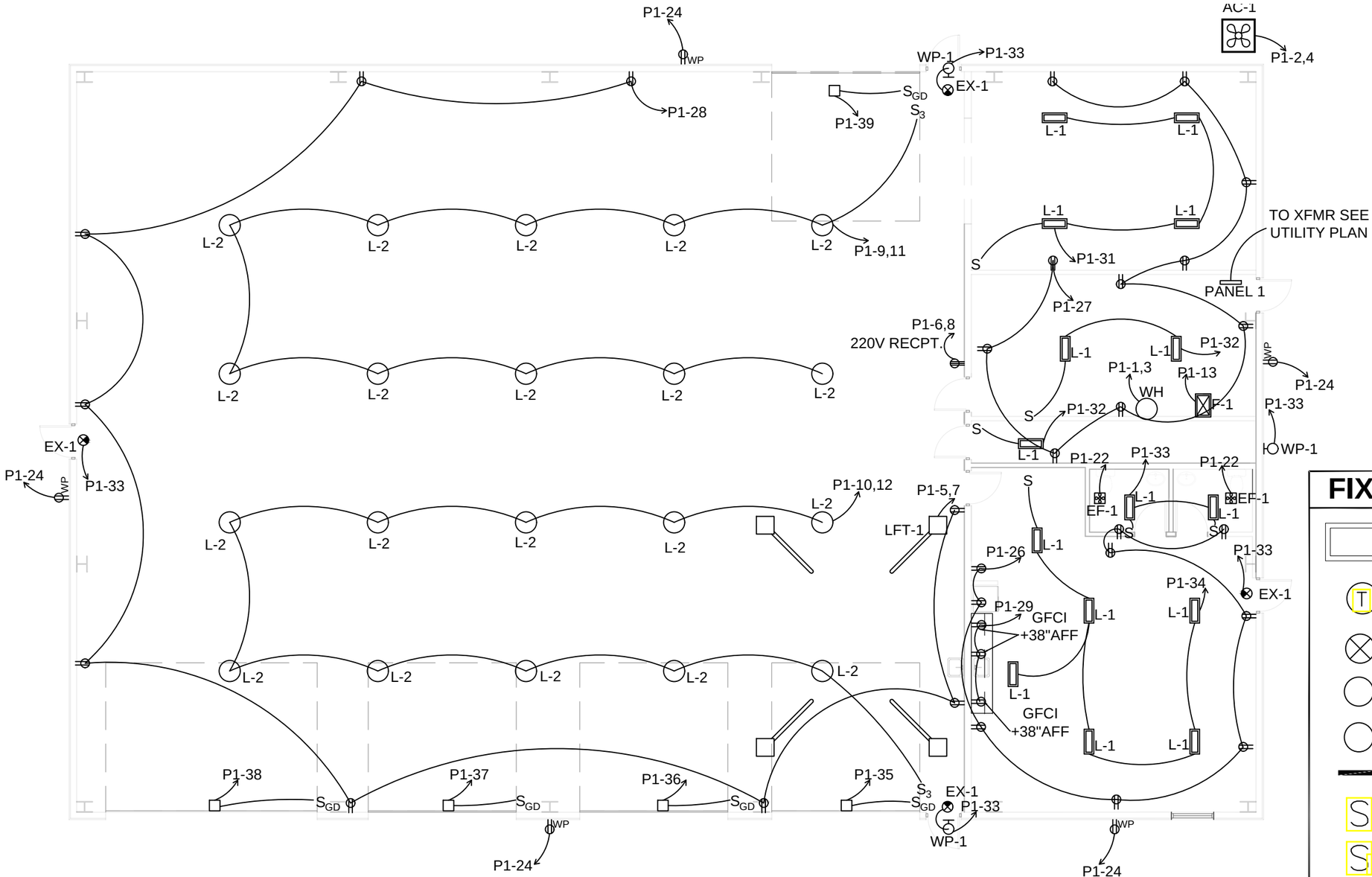


# LEGEND

| FIXT. | DESCRIPTION |
|---|---|
| | LIGHTING FIXTURE L-1 |
| T | THERMOSTAT |
| | EMERGENCY / EXIT LIGHT EX-1 |
| | WALL PAC OUTSIDE LIGHTING WP-1 |
| | LIGHTING FIXTURE L-2 |
| | ELECTRICAL PANEL P-1 |
| S | SWITCH |
| S3 | THREE WAY SWITCH |
| SGD | GARAGE DOOR SWITCH |
| | DUPLEX RECEPTACLE |
| WP | WATER PROOF RECEPTACLE |
| | 220V RECEPTACLE FOR WELDER |
| | BUS LIFT ARM |

1 **ELECTRICAL FLOOR PLAN**

SCALE: 3/32" = 1'-0" [11"X17"]
3/16" = 1'-0" [22"X34"]

NORTH

**REVIEW SET NOT FOR CONSTRUCTION**


Engineering International
(308) 340-6963
P.O. Box 401
402 Norris Ave., Suite 407
McCook NE 69001-0401


NEW (110' X 70') SCHOOL BUS BARN
CHASE COUNTY SCHOOL
IMPERIAL, NE

ELECTRICAL PLAN

DATE 3.23.2017

SCALE 3/32"=1'-0"

E1.0

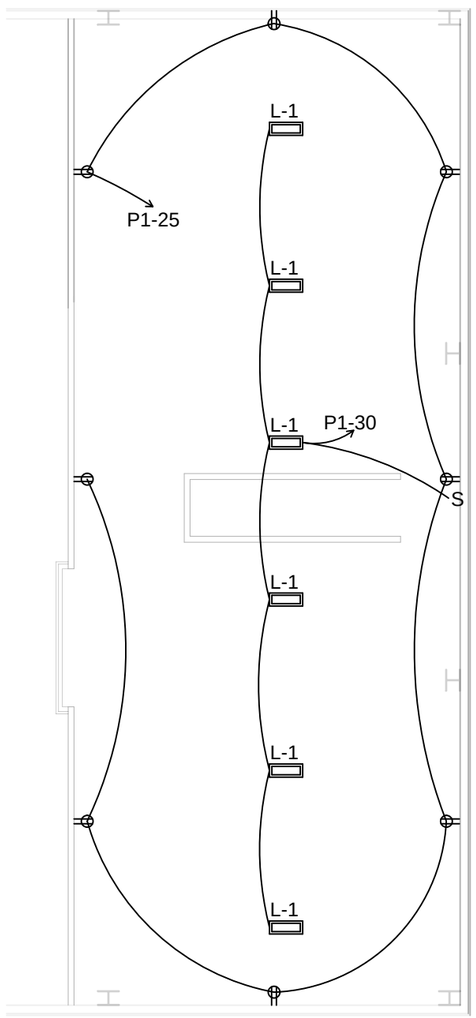


1 **ELECTRICAL MEZZ. PLAN**

SCALE: 3/32" = 1'-0" [11"X17"]
3/16" = 1'-0" [22"X34"]

NORTH

## LEGEND

| FIXT. | DESCRIPTION |
|---|---|
| | LIGHTING FIXTURE L-1 |
| T | THERMOSTAT |
| | EMERGENCY / EXIT LIGHT EX-1 |
| | WALL PAC OUTSIDE LIGHTING WP-1 |
| | LIGHTING FIXTURE L-2 |
| | ELECTRICAL PANEL P-1 |
| S | SWITCH |
| S3 | THREE WAY SWITCH |
| SGD | GARAGE DOOR SWITCH |
| | DUPLEX RECEPTACLE |
| WP | WATER PROOF RECEPTACLE |
| | 220V RECEPTACLE FOR WELDER |
| | BUS LIFT ARM |

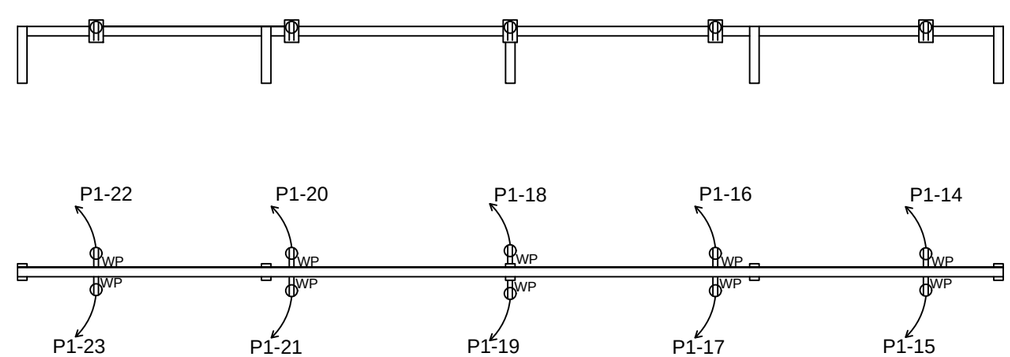


1 **BUS RECEPTACLE PLAN**

SCALE: 3/32" = 1'-0" [11"X17"]
3/16" = 1'-0" [22"X34"]

NORTH

REVIEW SET
NOT FOR
CONSTRUCTION

Engineering International
P.O. Box 401
402 North Avenue
McCook NE 69001-0401
(308) 340-5963

NEW (110' X 70') SCHOOL BUS BARN
CHASE COUNTY SCHOOL
IMPERIAL, NE

ELECTRICAL
MEZZ. PLAN

DATE 3.23.2017

SCALE 3/32"=1'-0"

E1.1

# PANEL 1

| DESCRIPTION (QUANTITY) | BRK | PHASE | | | BRK | DESCRIPTION (QUANTITY) |
|---|---|---|---|---|---|---|
| WATER HEATER-1 | 50 | 1 | A | 2 | 25 | AC UNIT-1 |
| | | 3 | B | 4 | | |
| LIFT LFT-1 (VERIFY WITH MANUFACTURER) | 50 | 5 | A | 6 | 40 | WELDER |
| | | 7 | B | 8 | | |
| BUS BARN LIGHTS (10) | 20 | 9 | A | 10 | 20 | BUS BARN LIGHTS (10) |
| | | 11 | B | 12 | | |
| FURNACE | 15 | 13 | A | 14 | 20 | OUTSIDE BUS RECPT. |
| OUTSIDE BUS RECPT. | 20 | 15 | B | 16 | 20 | OUTSIDE BUS RECPT. |
| OUTSIDE BUS RECPT. | 20 | 17 | A | 18 | 20 | OUTSIDE BUS RECPT. |
| OUTSIDE BUS RECPT. | 20 | 19 | B | 20 | 20 | OUTSIDE BUS RECPT. |
| OUTSIDE BUS RECPT. | 20 | 21 | A | 22 | 20 | OUTSIDE BUS RECPT. |
| OUTSIDE BUS RECPT. | 20 | 23 | B | 24 | 20 | OUTSIDE RECPT./EF-1 (7) |
| MEZZ. RECPT. (10) | 20 | 25 | A | 26 | 20 | BREAK/BATHROOM RECPT. (9) |
| MECH. STORAGE RM RECPT. (10) | 20 | 27 | B | 28 | 20 | BARN RECPT. (29) |
| COUNTER RECPT. (3) | 20 | 29 | A | 30 | 20 | MEZZ. LIGHTS (4) |
| STORAGE LIGHTS & WP-1 (5) | 20 | 31 | B | 32 | 20 | MECH.RM/STAIR LIGHTS (4) |
| BATHROOM LIGHTS & WP-1 (4) | 20 | 33 | A | 34 | 20 | BREAK ROOM LIGHTS (6) |
| GARAGE DOOR OPENER | 20 | 35 | B | 36 | 20 | GARAGE DOOR OPENER |
| GARAGE DOOR OPENER | 20 | 37 | A | 38 | 20 | GARAGE DOOR OPENER |
| GARAGE DOOR OPENER | 20 | 39 | B | 40 | | |
| | | 41 | A | 42 | | |

# LIGHTING SCHEDULE

| DESIGNATION | MANUFACTURER | MODEL # | MOUNT | QUANT. | SIZE | WATTS | REMARKS |
|---|---|---|---|---|---|---|---|
| L-1 | GENERAL ELECTRIC | S2NOA3SWHTE, OR APPROVED EQUAL | SURFACE | 32 | 7"X24" | 30-72W | LED, PROVIDE OCCUPANCY SENORS |
| L-2 | ALBEO | A44H80581BV23BDW, OR APPROVED EQUAL | SURFACE | 20 | 29 1/2"L, 21 1/3"W, 5 1/4"D | -- | 30,000, WITH MOTION SENSOR |
| WP-1 | E-CONO LIGHT | E-WP9LO9CZ, OR APPROVED EQUAL | WALL | 3 | 18"L, 9 3/8"W, 9 3/4"D | 96W | LED, PROVIDE ELECTRICAL SENSORS |
| EX-1 | E-CONO LIGHT | E-XPL2RBW, OR APPROVED EQUAL | CLG | 3 | 7 1/8"H, 11 5/8"W, 1 5/8"D | 0.8W | LED |

REVIEW SET
NOT FOR
CONSTRUCTION

Engineering International
(308) 340-5963
P.O.Box 401
1402 Morris Ave, Suite 407
McCook, NE 69001-4401

NEW (110' X 70') SCHOOL BUS BARN
CHASE COUNTY SCHOOL
IMPERIAL, NE

ELECTRICAL SCHEDULES

DATE 3.23.2017

SCALE 1/4"=1'-0"

E1.2

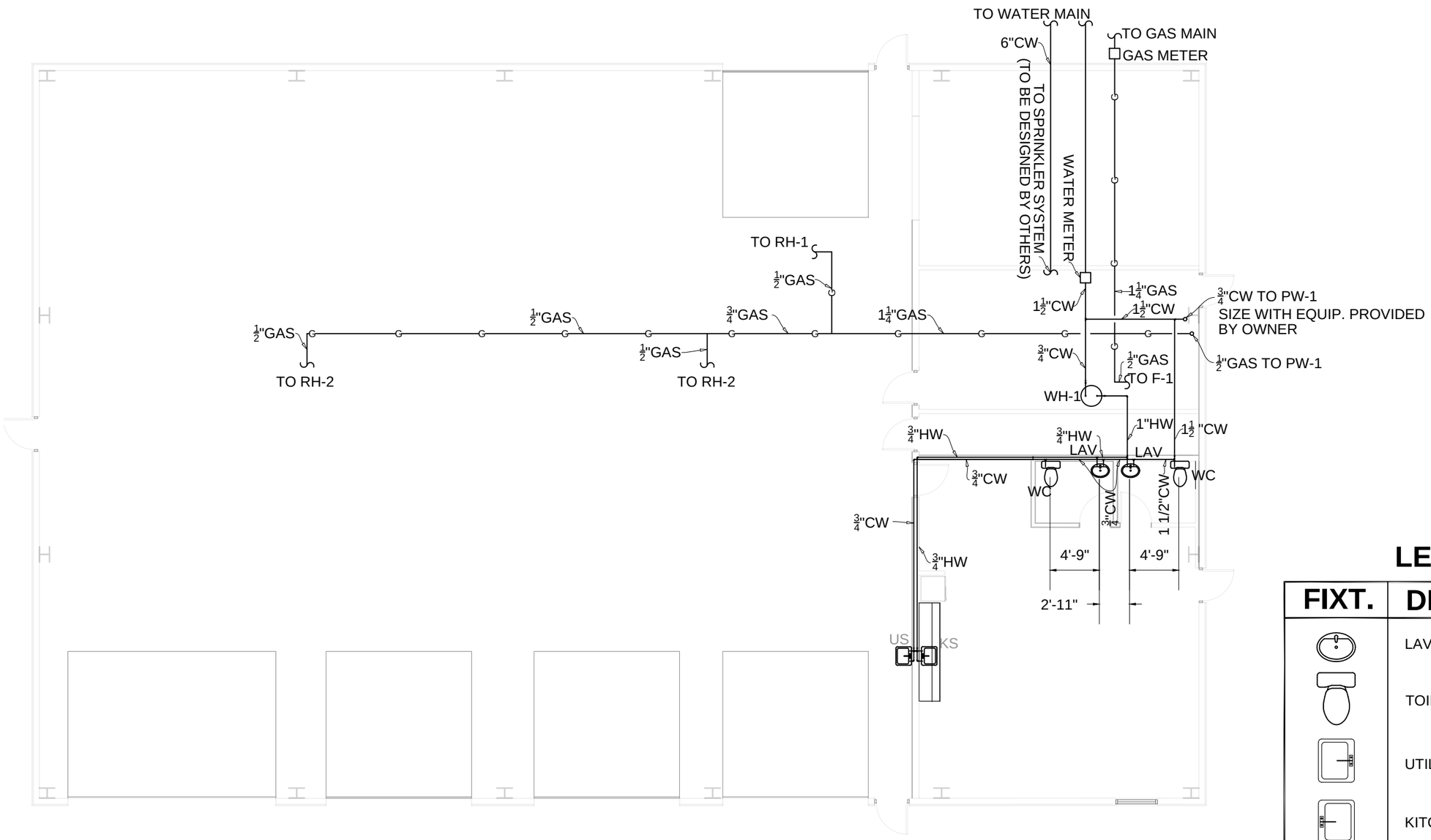


## LEGEND

| FIXT. | DESCRIPTION |
|---|---|
| | LAVATORY LAV |
| | TOILET WC |
| | UTILITY SINK US |
| | KITCHEN SINK KS |
| | WATER HEATER WH |
| | WASH DRAIN WD (SEE GRADING PLAN) |

1 **SUPPLY PLUMBING FLOOR PLAN**

SCALE: 3/32" = 1'-0" [11"X17"]
3/16" = 1'-0" [22"X34"]

NORTH

REVIEW SET
NOT FOR
CONSTRUCTION

Engineering International
(309) 340-5363
P.O. Box 401
402 Norris Ave. Suite 101
McCook NE 69001-0401

NEW (110' X 70') SCHOOL BUS BARN
CHASE COUNTY SCHOOLS
IMPERIAL, NE

WATER
PLUMBING PLAN

DATE 3.23.2017

SCALE 3/32"=1'-0"

P1.0

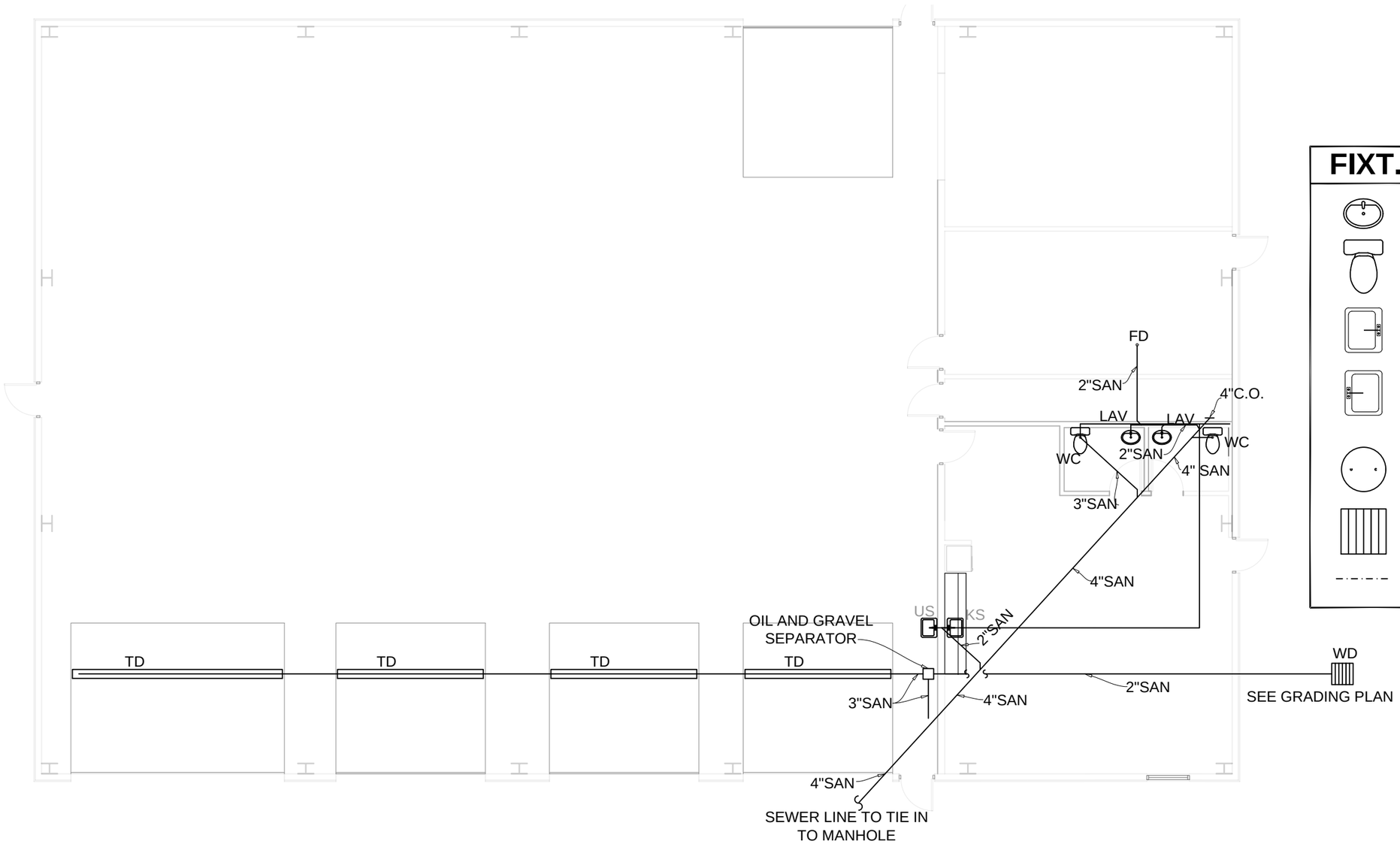


## LEGEND

| FIXT. | DESCRIPTION |
|---|---|
| | LAVATORY LAV |
| | TOILET WC |
| | UTILITY SINK US |
| | KITCHEN SINK KS |
| | WATER HEATER WH |
| | WASH DRAIN WD (SEE GRADING PLAN) |
| | VENT PIPING |

1 **WASTE PLUMBING FLOOR PLAN**

SCALE: 3/32" = 1'-0" [11"X17"]
3/16" = 1'-0" [22"X34"]

NORTH

REVIEW SET
NOT FOR
CONSTRUCTION

Engineering International
P.O. Box 401
402 Norris Avenue
McCook NE 69001-0401
(308) 340-5963

NEW (110' X 70') SCHOOL BUS BARN
CHASE COUNTY SCHOOLS
IMPERIAL, NE

WASTE PLUMBING PLAN

DATE 3.23.2017

SCALE 3/32"=1'-0"

P1.1

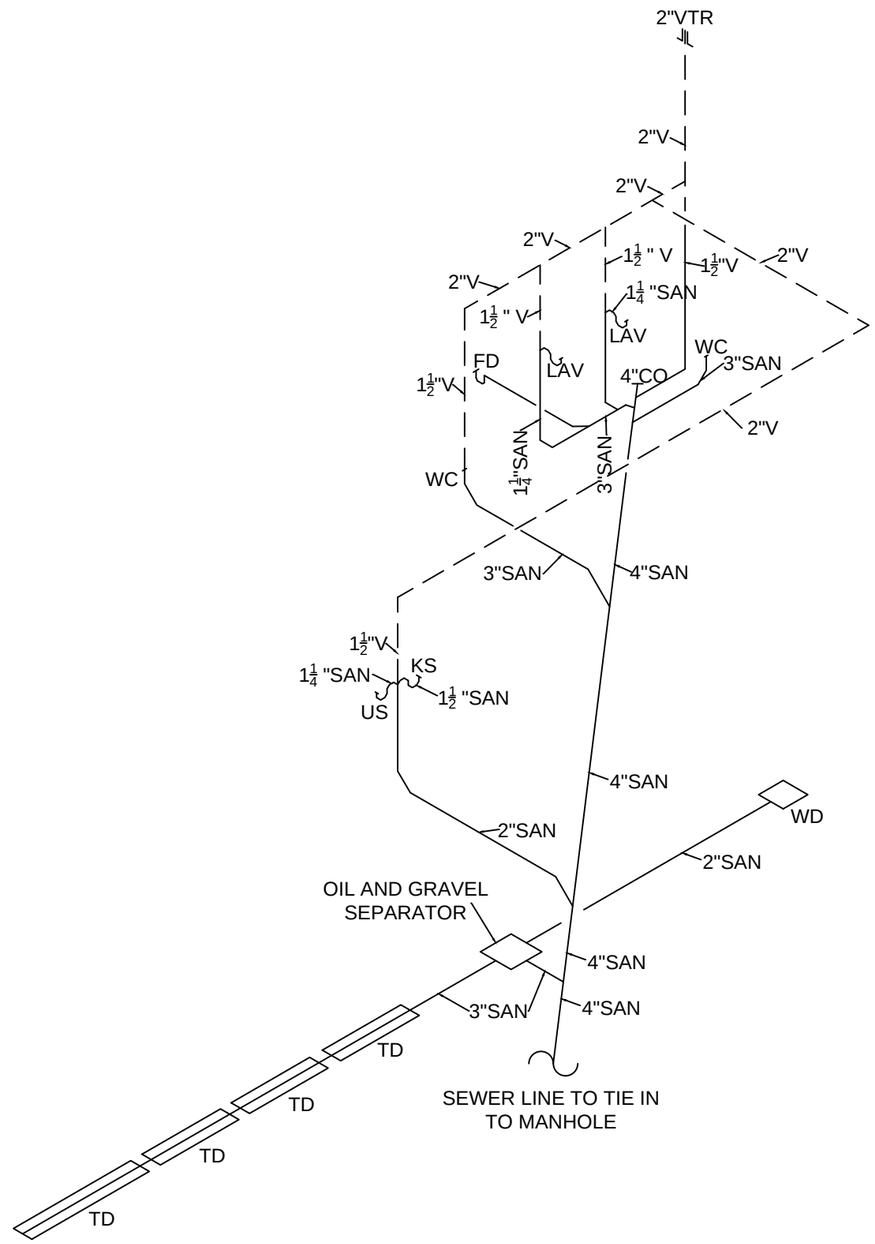


1 **RISER DIAGRAM**

SCALE: NTS

REVIEW SET
NOT FOR
CONSTRUCTION

Engineering International
(308) 340-5963
P.O.Box 401
402 North Kaufman Ave
McCook NE 69001-0401

NEW (110' X 70') SCHOOL BUS BARN
CHASE COUNTY SCHOOLS
IMPERIAL, NE

RISER DIAGRAM

DATE 3.23.2017

SCALE 3/32"=1'-0"

P1.2

# PLUMBING SCHEDULE

| DESIGNATION | MANUFACTURER | MODEL # | MOUNT | MATERIAL | REMARKS |
|---|---|---|---|---|---|
| WH-1 | RHEEM | XE10P06PU20U0 | FLOOR | -- | 10 GALLON CAPACITY, 2000 W |
| FD-1 | ZURN | GR-FR05NI-C2N-PS-CC | -- | CAST IRON | 2" PIPE DIAMETER |
| WC-1 | AMERICAN STANDARD | 2467.100 | FLOOR | VITREOUS CHINA | ADA, TANK TYPE, PROVIDE WITH AMERICAN STANDARD MODEL# 5218.210 SEAT |
| LAV-1 | AMERICAN STANDARD | 0356.041.020 | WALL | VITREOUS CHINA | FAUCET/HANDLE MODEL# 23577003 BY GROHE, DRAIN MODEL# 9295-CP BY DECOLAV |
| KS-1 | ELKAY | LR2219C | LAY IN | STAINLESS STEEL | FAUCET/HANDLE MODEL# LK406GN04T4C, DRAIN MODEL# LK500, BOTH ELKAY BRAND |
| US-1 | ELKAY | ESSB2520C | WALL | STAINLESS STEEL | FAUCET/HANDLE MODEL# LK907BR03L2H, DRAIN MODEL# LK173, BOTH ELKAY BRAND, U LINE FAUCET MOUNT EYE WASH STATION MODEL# H-5100 |
| TD-1 | ACO | S200K-SK200 68041 | -- | -- | GRATE MODEL# EN1433 |

REVIEW SET
NOT FOR
CONSTRUCTION

Engineering International
(308) 340-5363
P.O. Box 401
402 Norris Avenue, Suite #17
McCook NE 69001-0401

NEW (110' X 70') SCHOOL BUS BARN
CHASE COUNTY SCHOOLS
IMPERIAL, NE

PLUMBING
SCHEDULE

DATE 3.23.2017

SCALE 1/4"=1'-0"

P1.3

# NEW (99' X 70') SCHOOL BUS BARN
# CHASE COUNTY, NEBRASKA

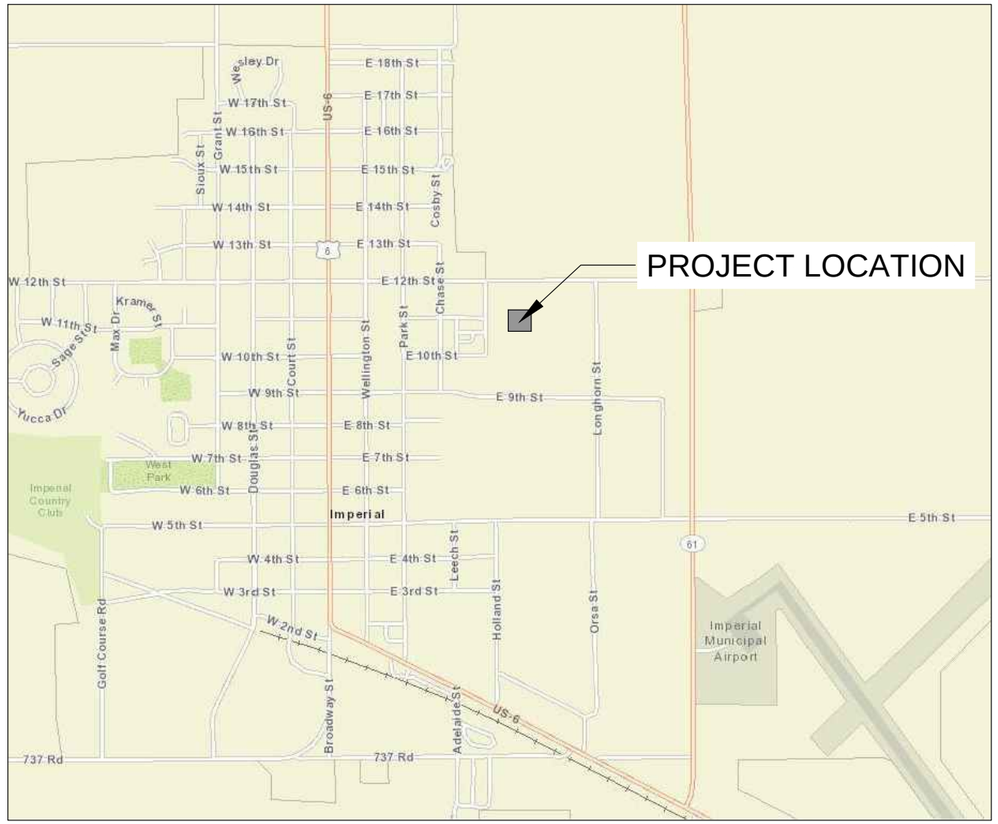


1 **LOCATION MAP**

SCALE: N.T.S.

NORTH

**NOTE:**
THE BUILDING HAS NO SPRINKLER SYSTEM

REVIEW SET
NOT FOR
CONSTRUCTION


Engineering International
(308) 340-5943
P.O.Box 401
402 Norris Avenue, Suite 107
McCook NE 69001-0401


NEW (99' X 70') SCHOOL BUS BARN
CHASE COUNTY SCHOOLS
IMPERIAL, NEBRASKA

COVER SHEET

DATE 3.23.2017

SCALE N.T.S.

CS1.0

# SHEET LIST TABLE


| | |
|---|---|
| CS1.0 | COVER SHEET |
| G1.0 | SHEET LIST TABLE |
| LS1.0 | LIFE SAFETY PLANS |
| **CIVIL** | |
| C1.0 | GRADING PLAN |
| C2.0 | UTILITY PLAN |
| C3.0 | PAVING AND GEOMETRIC PLAN |
| C4.0 | DETAILS |
| C4.1 | DETAILS |
| C4.2 | DETAILS |
| **ARCHITECTURAL** | |
| A1.0 | MAIN FLOOR PLAN |
| A1.1 | MEZZ. FLOOR PLAN |
| A2.0 | BUILDING SECTIONS |
| A2.1 | BUILDING SECTION |
| A3.0 | ELEVATIONS |
| A3.1 | ELEVATIONS |
| A4.0 | STAIR DETAILS |
| A4.1 | INTERIOR ELEVATIONS |
| A4.2 | ACCESSIBLE FIXTURES AND ACCESSORIES |
| A5.0 | DOOR SCHEDULE |
| A5.1 | DOOR SCHEDULE |
| A5.2 | ROOM FINISH SCHEDULE |
| **STRUCTURAL** | |
| S1.1 | STRUCTURAL NOTES |
| S2.1 | STRUCTURAL SCHEDULES |
| S3.1 | STRUCTURAL DETAILS |
| **MECHANICAL** | |
| M1.0 | MECH. FLOOR PLAN |
| M1.1 | MECH. MEZZ.PLAN |
| M1.2 | MECHANICAL SCHEDULES |
| **ELECTRICAL** | |
| E1.0 | ELECTRICAL PLAN |
| E1.1 | ELECTRICAL MEZZ. PLAN |
| E1.2 | ELECTRICAL SCHEDULES |
| **PLUMBING** | |
| P1.0 | WATER SUPPLY FLOOR PLAN |
| P1.1 | WASTE PLUMPING FLOOR PLAN |
| P1.2 | RISER DIAGRAM |
| P1.3 | PLUMBING SCHEDULE |


**REVIEW SET NOT FOR CONSTRUCTION**


Engineering International
(308) 340-5943
P.O.Box 401
402 North Adams St.
McCook NE 69001-0401


**NEW (99' X 70') SCHOOL BUS BARN**
CHASE COUNTY SCHOOLS
**IMPERIAL, NEBRASKA**

SHEET LIST TABLE

DATE 3.23.2017

SCALE N.T.S.

G1.0

**NOTE:**

1. THE BUILDING HAS NO SPRINKLER SYSTEM

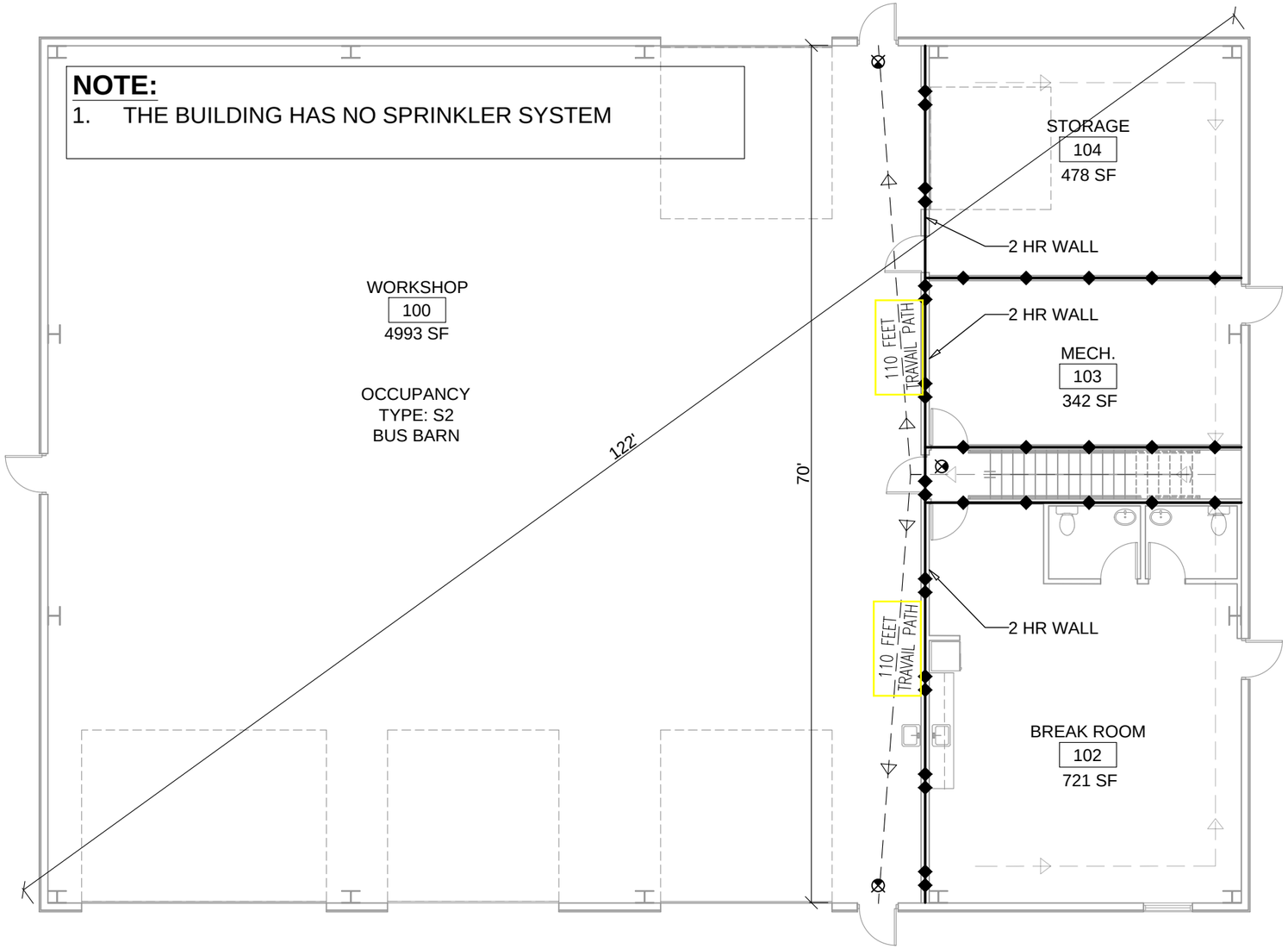


2 HR FIRE RATED WALL

1 HR FIRE RATED WALL

## 1 LIFE SAFETY MAIN PLAN

SCALE: 3/32" = 1'-0" [11"X17"]
3/16" = 1'-0" [22"X34"]

NORTH

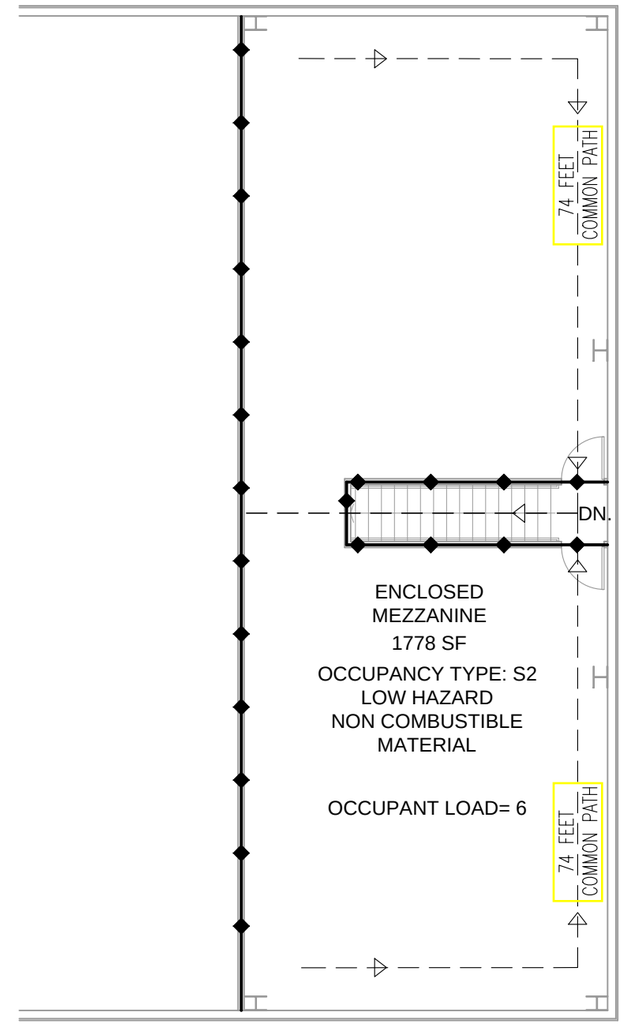


## 2 LIFE SAFETY MEZZ. PLAN

SCALE: 3/32" = 1'-0" [11"X17"]
3/16" = 1'-0" [22"X34"]

NORTH

**NOTES:**

1. PORTABLE FIRE EXTINGUISHER SHALL BE PROVIDED IN LOCATIONS SPECIFIED BY THE FIRE INSPECTOR ,
2. PLACE OF THE FIRE EXTINGUISHER TO BE WITHIN 75 FEET TRAVEL DISTANCE FROM ANYWHERE WITHIN THE SPACE.
3. EXITS TERMINATE DIRECTLY AT A PUBLIC WAY
4. ILLUMINATION AND EMERGENCY LIGHTING SHALL PROVIDE AN AVERAGE OF ONE FOOT-CANDLE OF LIGHTING, AT FLOOR LEVEL, THROUGHOUT THE MEANS OF EGRESS TO A PUBLIC WAY
5. HANDRAILS ON STAIRS SHALL NOT BE LESS THAN 34" AND NOT MORE THAN 38" ABOVE THE SURFACE OF A TREAD AND SHALL BE PROVIDED ON BOTH SIDES. HANDRAILS SHALL EXTEND 12" HORIZONTALLY BEYONDTHE TOP RISER AND CONTINUE TO SLOPE FOR ONE TREAD DEPTH BEYOND THE BOTTOM RISER AND BE RETURNED TO THE WALL / FLOOR / ON EACH END.

**REVIEW SET**
**NOT FOR CONSTRUCTION**


Engineering International
(308) 340-5943
P.O.Box 401
402 Norris Ave. Suite 107
McCook NE 69001-0401


**NEW (99' X 70') SCHOOL BUS BARN**
CHASE COUNTY SCHOOLS
**IMPERIAL, NEBRASKA**

LIFE SAFETY PLANS

DATE 3.23.2017

SCALE 3/32"=1'-0"

LS1.0

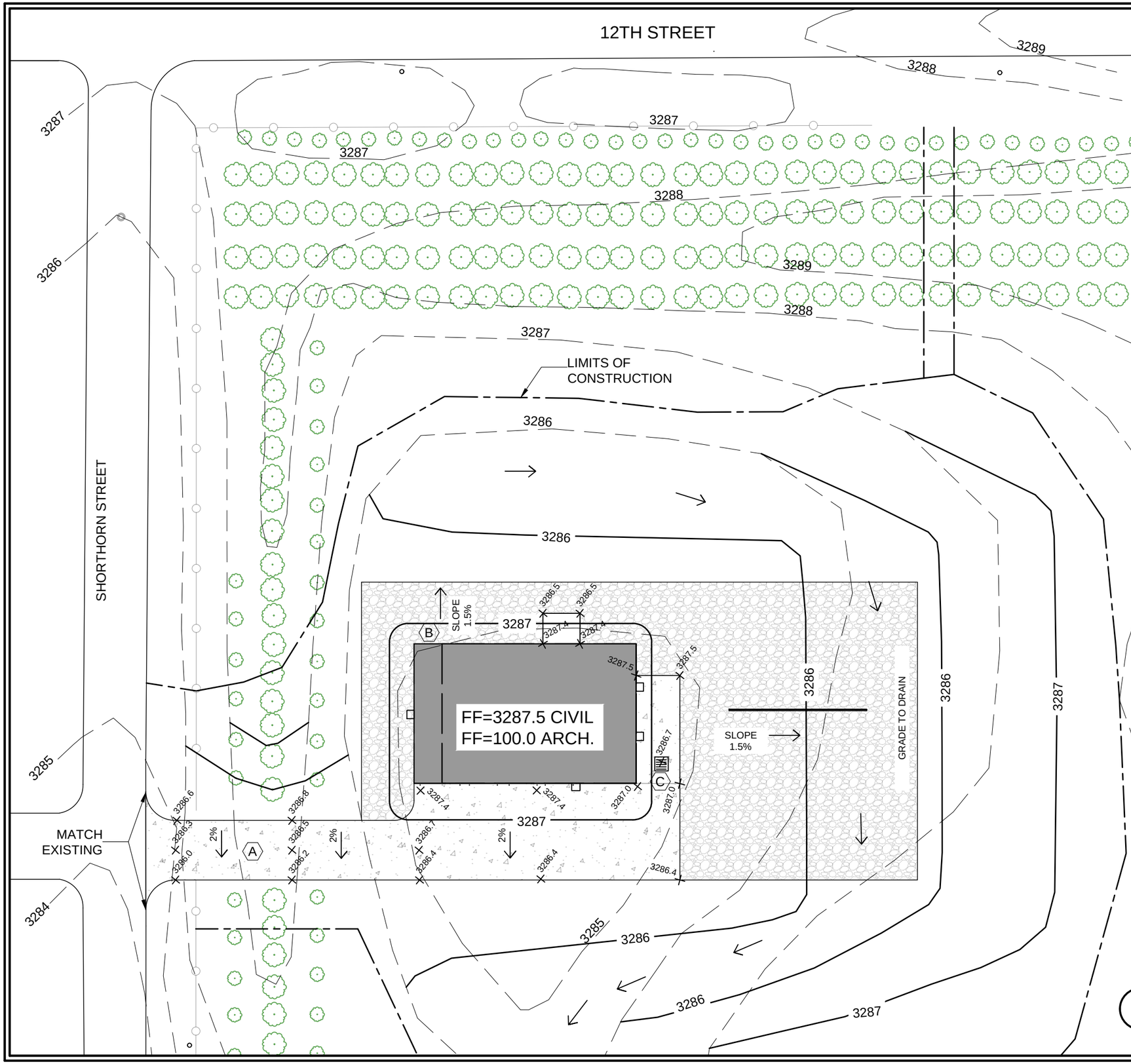


LEGEND:

- EXISTING CONTOURS
- NEW CONTOURS
- LIMITS OF CONSTRUCTION

**NOTE:**

GRADING GENERAL NOTES

1. ALL ELEVATIONS SHOWN ARE TOP OF SLAB ELEVATIONS UNLESS OTHERWISE NOTED.

GRADING QUANTITIES

| | |
|---|---|
| STRIP 6" TOPSOIL. | 2,755 CU. YDS. |
| CUT | 670 CU. YDS. |
| FILL | 3,590 CU. YDS. |
| NET | 3,190 CU. YDS. (FILL) |

GRADING QUANTITITES ARE APPROXIMATE AND ARE PROVIDED FOR REFERENCE ONLY.

GRADING KEY NOTES

A. REMOVE EXISTING CEDAR TREES FOR DRIVEWAY. SCARIFY TOP 6" OF GROUND UNDER ALL PAVEMENT AND COMPACT TO 95% STANDARD PROCTOR UNDER PAVEMENT AND 98% UNDER FOOTING / FOUNDATION.

B. SLOPE 5% FROM BUILDING FOR FIRST 10', 2% MIN SLOPE THEREAFTER.

C. CONSTRUCT GRATE INLET. 2'X3' NYOPLAST-ADS PVC ROAD AND HIGHWAY GRATE INLET WITH 2'X3' SQUARE GRATE (H-20) OR APPROVED EQUAL. SEE DETAIL 4 ON SHEET C4.1.

D. GRATE = 3286.7. 4" FL OUT = 3285.7.

1 **GRADING PLAN**

SCALE: 1" = 50' [11"X17"]
1 = 100' [22"X34"]

NORTH

**BID SET**


Engineering International
(308) 340-5943
P.O.Box 401
402 Norris Avenue, Suite 107
McCook NE 69001-0401


**NEW (99' X 70') SCHOOL BUS BARN**
CHASE COUNTY SCHOOLS
**IMPERIAL, NEBRASKA**

GRADING PLAN

DATE 3.22.2017

SCALE 1"=50'-0"

C1.0

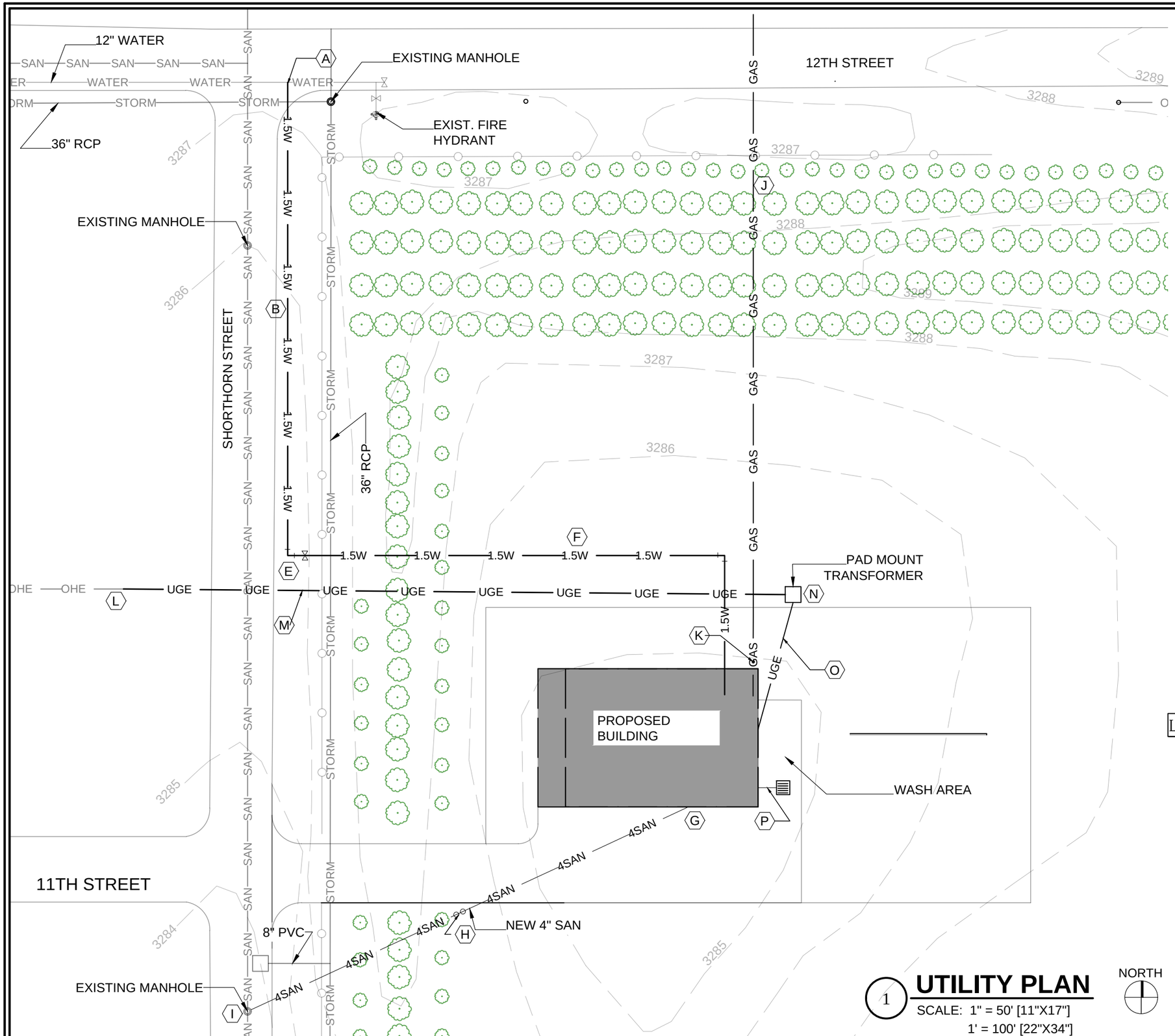


## UTILITY KEY NOTES

A. 1 1/2" TAPPING SLEEVE AND VALVE BY CITY OF IMPERIAL. COORDINATE WITH CITY PRIOR TO CONSTRUCTION. CONTRACTOR TO EXPOSE WATER MAIN.

B. INSTALL 1 1/2" WATER SERVICE, 255 LF

C. NOT USED

D. NOT USED

E. INSTALL 1 1/2" CURB STOP FOR DOMESTIC WATER.

F. INSTALL 1 1/2" DOMESTIC WATER SUPPLY, 280 LF. STUB INTO FUTURE MECHANICAL ROOM.

G. CONSTRUCT 4" SANITARY SEWER, 260 LF. 2.0% MIN. SLOPE, SEE PLUMBING SHEETS FOR CONTINUATION IN BUILDING.

H. CONSTRUCT DOUBLE CLEAN-OUT. SEE DETAIL 1, SHEET C4.0

I. CONNECT TO EXISTING MANHOLE.

J. PROPOSED GAS SERVICE TO BE LOCATED, SIZED AND CONSTRUCTED BY LOCAL UTILITY PROVIDER. CONTRACTOR SHALL COORDINATE. SEE PLUMBING SHEET FOR CONTINUATION IN BUILDING.

K. GAS METER INSTALLED BY LOCAL UTILITY.

L. NEW UNDERGROUND SERVICE FROM EXISTING OHE, BY LOCAL UTILITY.

M. NEW UNDERGROUND ELECTRICAL SERVICE, BY LOCAL UTILITY.

N. NEW PAD MOUNT TRANSFORMER.

O. NEW UNDERGROUND SERVICE, BY CONTRACTOR. SEE ELECTRICAL SHEET FOR CONTINUATION INSIDE.

P. NEW 4" SEWER FROM WASH TO OIL / SEDIMENT TRAP. SEE PLUMBING SHEET FOR CONTINUATION.

## LEGEND:

| | |
|---|---|
| 1.5W | NEW 1.5" WATER |
| 4SAN | NEW 4" SANITARY SEWER |
| STORM | EXISTING STORM SEWER |
| GAS | NEW GAS LINE |
| UGE | NEW UNDERGROUND ELECTRICAL SERVICE |
| WATER | EXISTING MAIN WATER |
| OHE | EXISTING OVERHEAD ELECTRIC SERVICE |
| SAN | EXISTING SANITARY SEWER |

1 **UTILITY PLAN**

SCALE: 1" = 50' [11"X17"]
1' = 100' [22"X34"]

NORTH

**BID SET**


Engineering International
(308) 340-5943
P.O.Box 401
402 Norris Ave. Suite 107
McCook NE 69001-0401


**NEW (99' X 70') SCHOOL BUS BARN**
CHASE COUNTY SCHOOLS
**IMPERIAL, NEBRASKA**

UTILITY PLAN

DATE 3.22.2017

SCALE 1"=50'-0"

C2.0

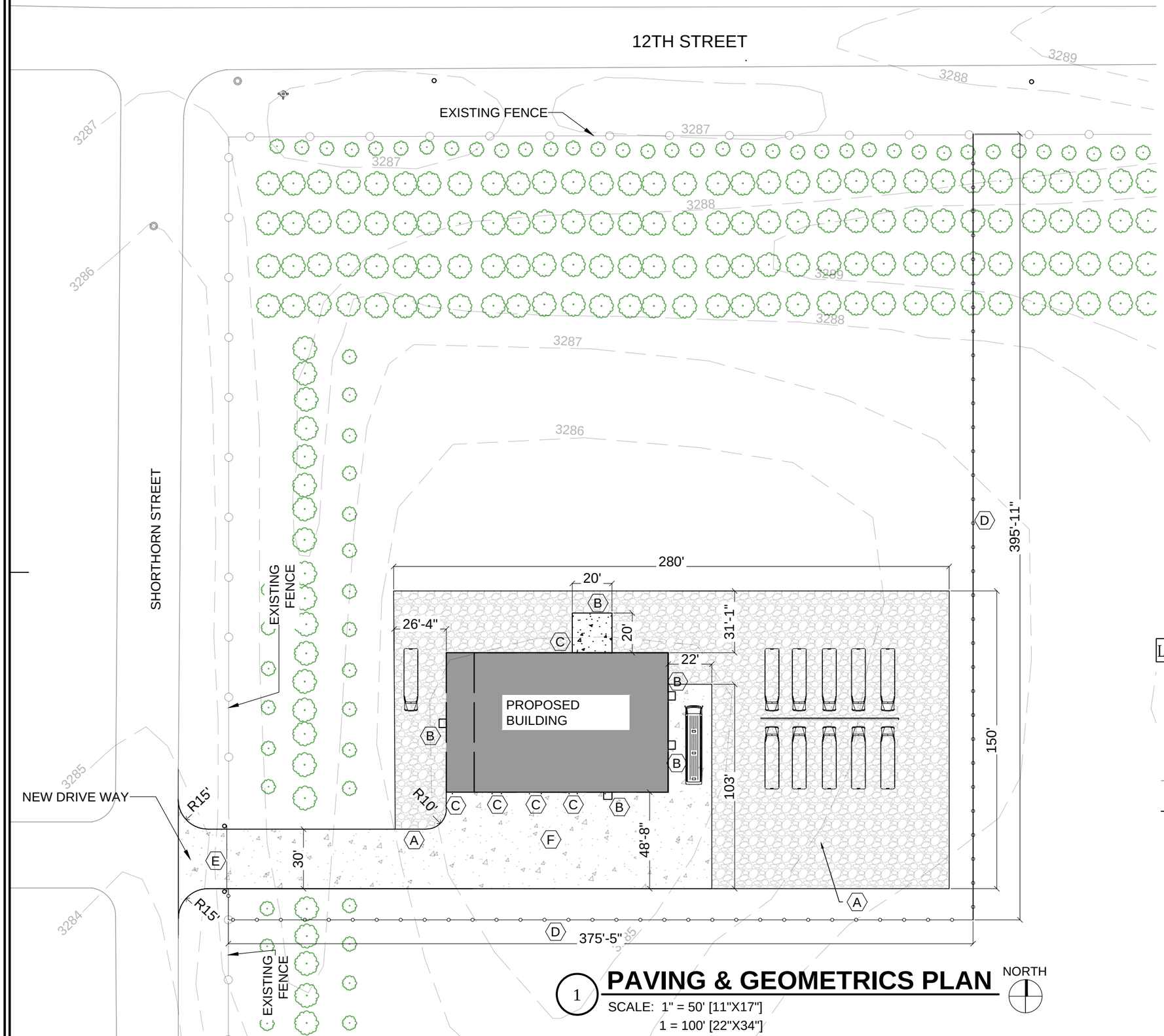


1 **PAVING & GEOMETRICS PLAN**

SCALE: 1" = 50' [11"X17"]
1 = 100' [22"X34"]

NORTH

**NOTE:**

A. CONSTRUCT THICKENED EDGE. SEE DETAIL 5, SHEET C4.1

B. CONSTRUCT STRUCTURAL STOOP. SEE DETAIL 4, SHEET S3.1

C. CONSTRUCT BOLLARD.

D. CONSTRUCT 785' OF 48" TALL CHAIN LINK FENCE, SEE DETAIL 7, SHT C4.2

E. CONSTRUCT SLIDING GATE FOR CHAIN LINK FENCE, SEE DETAIL 6, SHT C4.2

F. SAW PCC PAVEMENT AS SOON AS PRACTICAL AFTER POURING AND PRIOR TO CONCRETE CRACKING. JOINTS SHALL BE AT 15' INTERVALS TYPICALLY. PANELS SHALL BE SQUARE WHEN POSSIBLE WITH A LENGTH TO WIDTH RATIO OF LESS THAN 1.5. ODD SHAPED PANELS SHALL BE REINFORCED WITH 6X6,10/10 WWM ON CHAIRS AT 3' C.C. MAX.

LEGEND:

- CONSTRUCT 3/4" CRUSHED ROCK PARKING LOT
- CONSTRUCT 6" " RCC PAVEMENT
- EXISTING FENCE
- NEW FENCE

**BID SET**


Engineering International
(308) 340-5943
P.O Box 401
402 North Adams Ave
McCook NE 69001-0401


**NEW (99' X 70') SCHOOL BUS BARN**
CHASE COUNTY SCHOOLS
**IMPERIAL, NEBRASKA**

**PAVING & GEOMETRIC PLAN**

DATE 3.22.2017

SCALE 1"=50'-0"

C3.0

NOTES:

1. FRAME AND COVER TO BE CAST IRON. APPROX. WEIGHT IS 70 LBS.
2. COVER TO HAVE THE LETTERS "C.O." CAST ON TOP
3. CONCRETE REST BLOCK SHALL BE 2'-0" LONG X O.D. OF PIPE + 6" ON EACH SIDE.

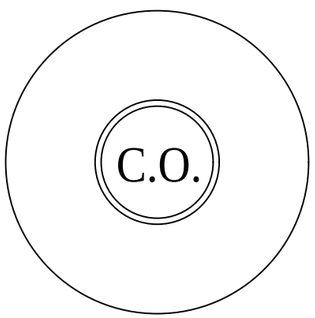


PLAN

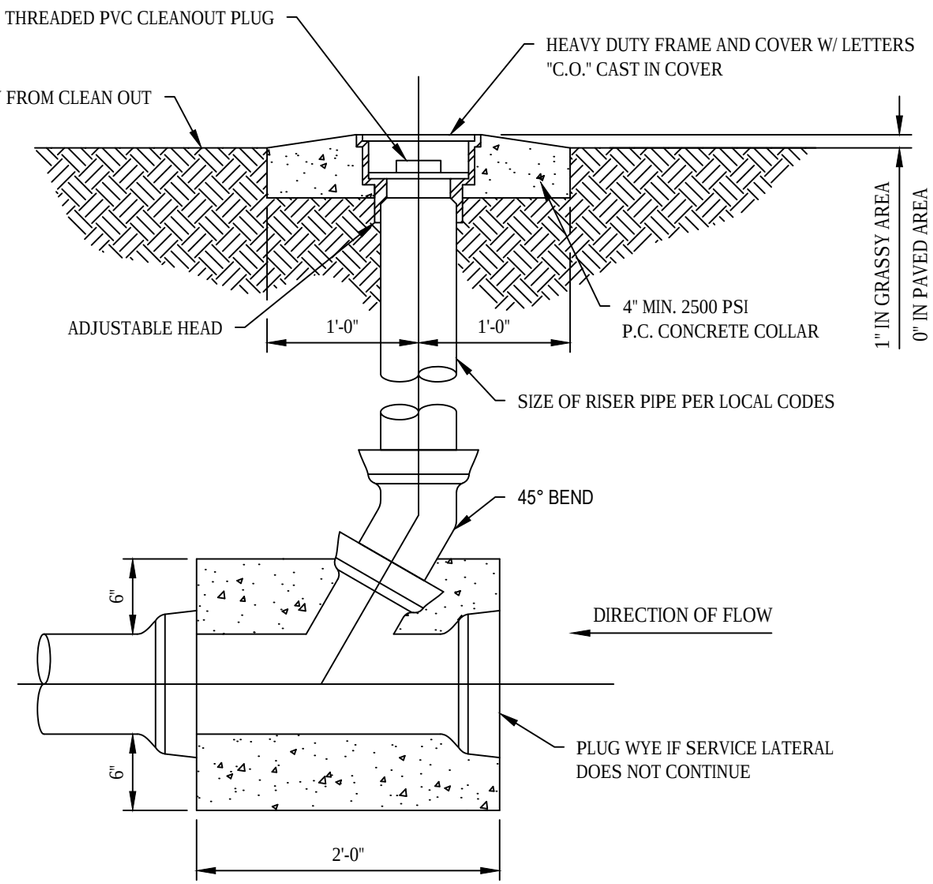


SECTION

1 SEWER CLEANOUT DETAIL

SCALE: NOT TO SCALE

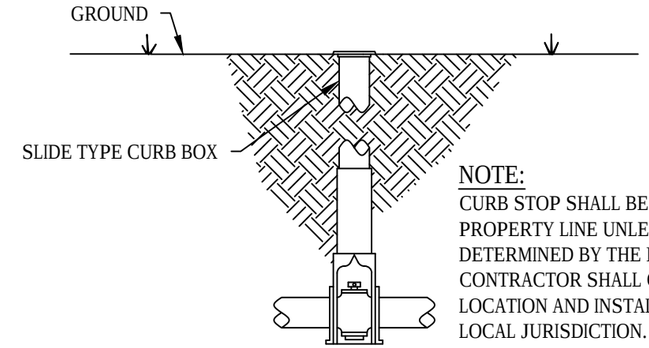


NOTE:
CURB STOP SHALL BE LOCATED ON PROPERTY LINE UNLESS OTHERWISE DETERMINED BY THE ENGINEER. CONTRACTOR SHALL COORDINATE LOCATION AND INSTALLATION WITH LOCAL JURISDICTION.

2 TYPICAL CURB STOP DETAIL

SCALE: NOT TO SCALE

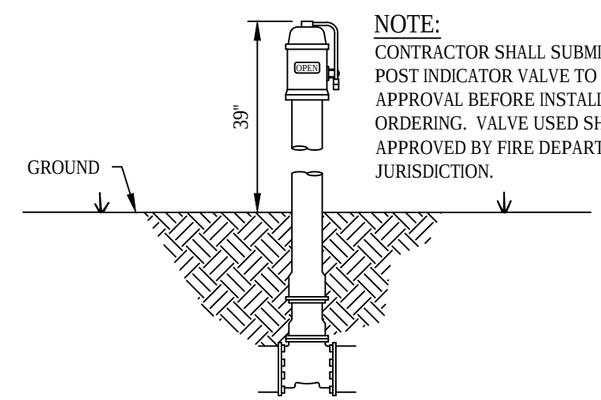


NOTE:
CONTRACTOR SHALL SUBMIT PROPOSED POST INDICATOR VALVE TO OWNER FOR APPROVAL BEFORE INSTALLATION OR ORDERING. VALVE USED SHALL BE APPROVED BY FIRE DEPARTMENT HAVING JURISDICTION.

3 POST INDICATOR VALVE DETAIL

SCALE: NOT TO SCALE

BID SET

Engineering International
(308) 340-5943
P.O. Box 401
402 Norris Ave. Suite 107
McCook NE 69001-0401

NEW (99' X 70') SCHOOL BUS BARN
CHASE COUNTY SCHOOLS
IMPERIAL, NEBRASKA

DETAILS

DATE 3.22.2017

SCALE

C4.0

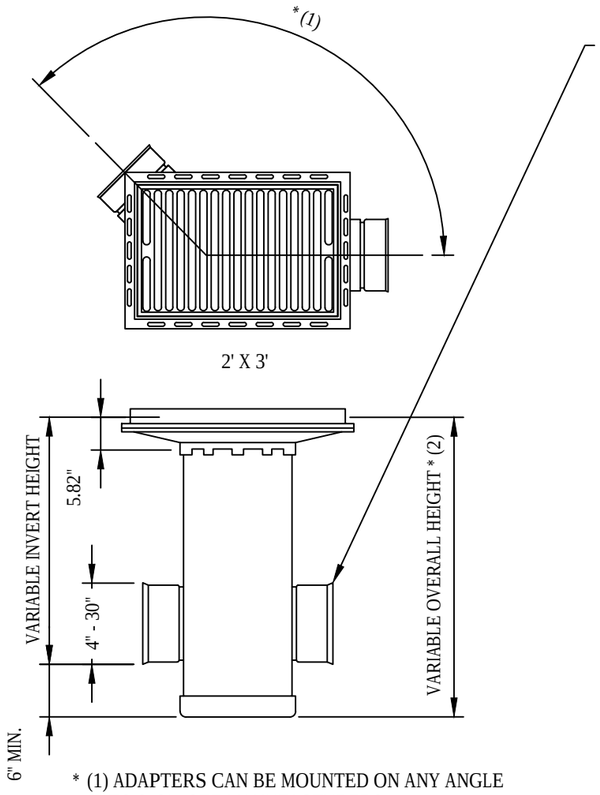


VARIOUS TYPES OF INLET AND OUTLET ADAPTERS AVAILABLE IN SIZES 4" THRU 30" FOR: ADS N-12, SDR-35 SEWER, SCHEDULE 40 DWV, CORRUGATED PVC AND RIBBED PVC

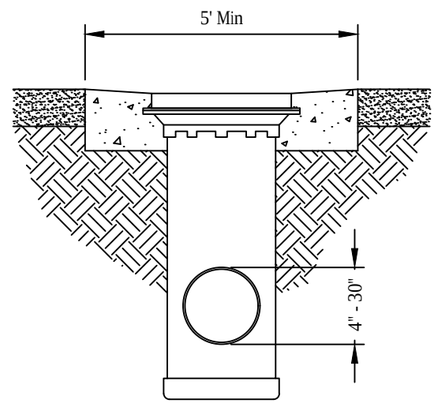


* (1) ADAPTERS CAN BE MOUNTED ON ANY ANGLE 0° TO 359°. SEE MANUFACTURERS RECOMMENDATIONS TO DETERMINE MINIMUM ANGLE BETWEEN ADAPTERS.
* (2) MAXIMUM RECOMMENDED OVERALL HEIGHT 10'.

1. GRATE INLET FITS DRAIN BASIN SIZES: 18", 24" & 30"
2. MATERIAL: FRAME & GRATE MATERIALS SHALL CONFORM TO ASTM A-36 STEEL, BASE PLATE MATERIALS SHALL CONFORM TO ASTM A536 GRADE 70-50-05 DUCTILE IRON.
3. ALL CASTINGS ARE FURNISHED WITH BLACK PAINT AND ZINC PLATED FASTENERS
4. LOCKING DEVICE AVAILABLE UPON REQUEST

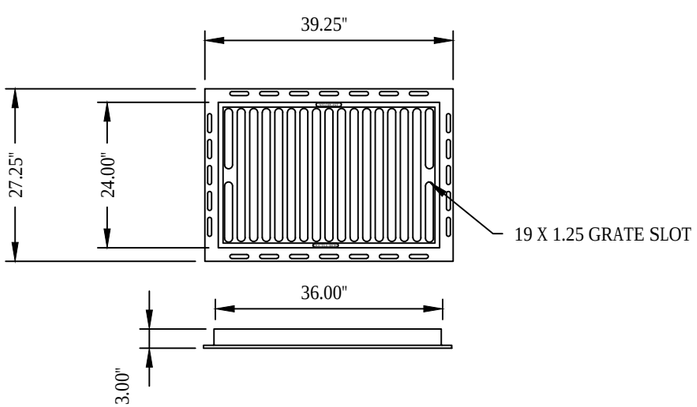


NUMBER 2'X3' GRATE INLET & GRATE DETAIL

SHEETLT SHEETRT SCALE: NOT TO SCALE

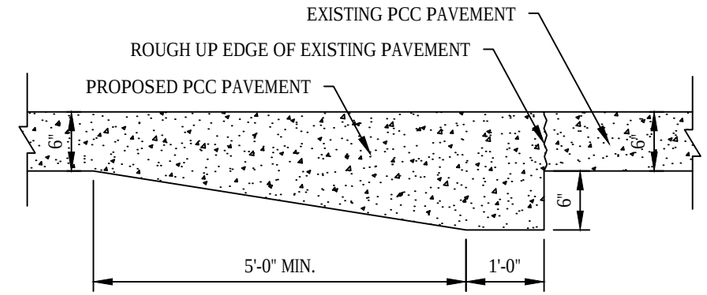


5 THICKENED EDGE DETAIL

SCALE: NOT TO SCALE

BID SET

Engineering International
(308) 340-5943
P.O.Box 401
402 Norris Avenue, Suite 107
McCook NE 69001-0401

NEW (99' X 70') SCHOOL BUS BARN
CHASE COUNTY SCHOOLS
IMPERIAL, NEBRASKA

DETAILS

DATE 3.22.2017

SCALE

C4.1

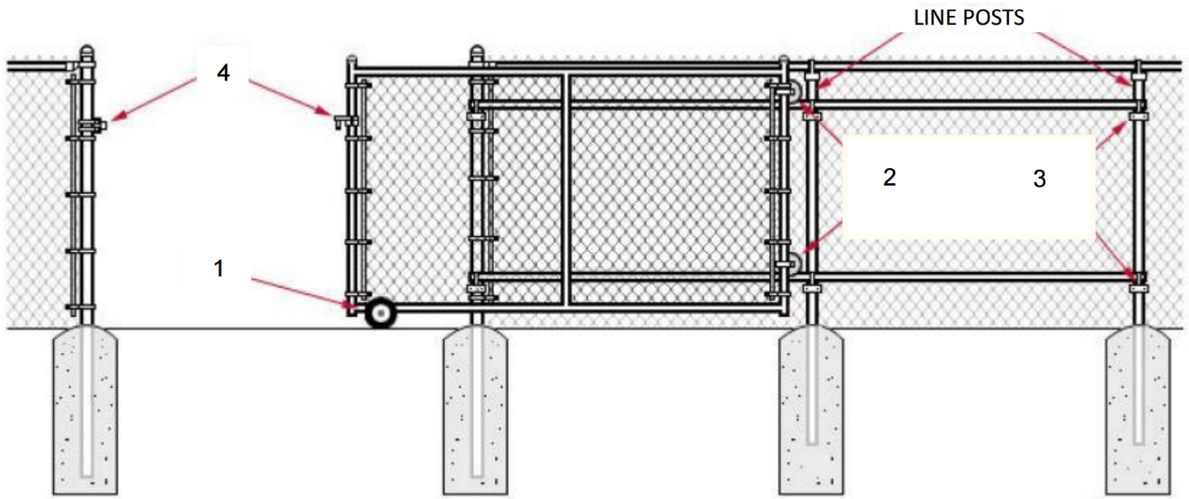


## 6 ROLLING GATE DETAIL

SCALE: NOT TO SCALE

ROLLING GATE KEY NOTES

1. SINGLE OR DOUBLE WHEEL CARRIER
2. REAR WHEEL
3. PIPE TRACK BRACKET
4. LATCH

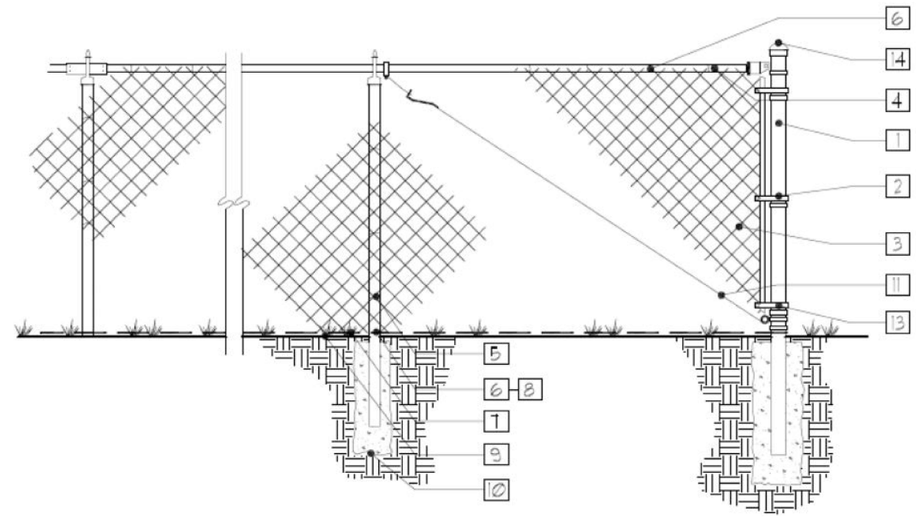


## 7 CHAIN LINK FENCE DETAIL

SCALE: NOT TO SCALE

CHAIN LINK FENCE KEY NOTES

1. TERMINAL POST (REFER TO CHART FOR MINIMUM SIZE)
2. TENSION BANDS (MAXIMUM SPACING 12" ON CENTER)
3. WIRE FABRIC MINIMUM 121/2 GAGE.
4. TOP RAIL (MINIMUM 1 5/8" X .047)
5. LINE POST- REFER TO CHART FOR MINIMUM SIZE
6. WIRE FABRIC TIES AT TOP RAIL (MINIMUM 5 TIES BETWEEN POSTS)
7. BOTTOM TENSION WIRE MINIMUM 7 GAGE.
8. WIRE FABRIC TIES MINIMUM AT 12" ON CENTER
9. MAXIMUM CLEAR SPACING ALLOWED AT BOTTOM 2"
10. FOOTING SIZE (REFER TO CHART FOR MINIMUM REQUIRED SIZING)
11. OPTIONAL TRUSS ROD
12. OPTIONAL DRAW BAR
13. POST CAP
14. FENCE HEIGHT (REFER TO CHART FOR HEIGHT REQUIREMENTS)

| FENCE HEIGHT (INCHES) | TERMINAL POST DIMENSIONS (INCHES) (O.D. X WALL THICKNESS) | LINE POST DIMENSIONS (O.D. X WALL THICKNESS) | TERMINAL POST CONCRETE FOUNDATION SIZE (DIAMETER X DEPTH) | LINE POST CONCRETE FOUNDATION SIZE (DIAMETER X DEPTH) |
|---|---|---|---|---|
| Up to 48 | 2 3/8 x 0.042 | 1 5/8 x 0.047 | 10 x 24 | 8 x 24 |
| 49 to 60 | 2 3/8 x 0.042 | 1 7/8 x 0.055 | 10 x 24 | 8 x 24 |
| 61 to 72 | 2 3/8 x 0.042 | 1 7/8 x 0.065 | 10 x 24 | 8 x 24 |
| 73 to 96 | 2 3/8 x 0.110 | 2 3/8 x 0.095 | 10 x 36 | 10 x 36 |
| 97 to 120 | 2 7/8 x 0.110 | 2 3/8 x 0.130 | 12 x 40 | 10 x 40 |
| 121 to 144 | 2 7/8 x 0.160 | 2 7/8 x 0.120 | 12 x 42 | 12 x 42 |

1. THIS TABLE IS APPLICABLE ONLY TO FENCES WITH UNRESTRICTED AIRFLOW.
2. BRACES MUST BE USED AT TERMINAL POSTS IF TOP TENSION WIRE IS USED INSTEAD OF TOP RAIL.
3. POST SPACING: 10 FOOT (3 M) ON CENTER MAXIMUM.
4. POSTS SHALL BE EMBEDDED TO WITHIN 6 INCHES (152 MM) FROM THE BOTTOM OF THE FOUNDATION.

BID SET


Engineering International
(308) 340-5943
P.O Box 401
402 Norris Avenue, Suite 107
McCook NE 69001-0401


NEW (99' X 70') SCHOOL BUS BARN
CHASE COUNTY SCHOOLS
IMPERIAL, NEBRASKA

DETAILS

DATE 3.22.2017

SCALE

C4.2

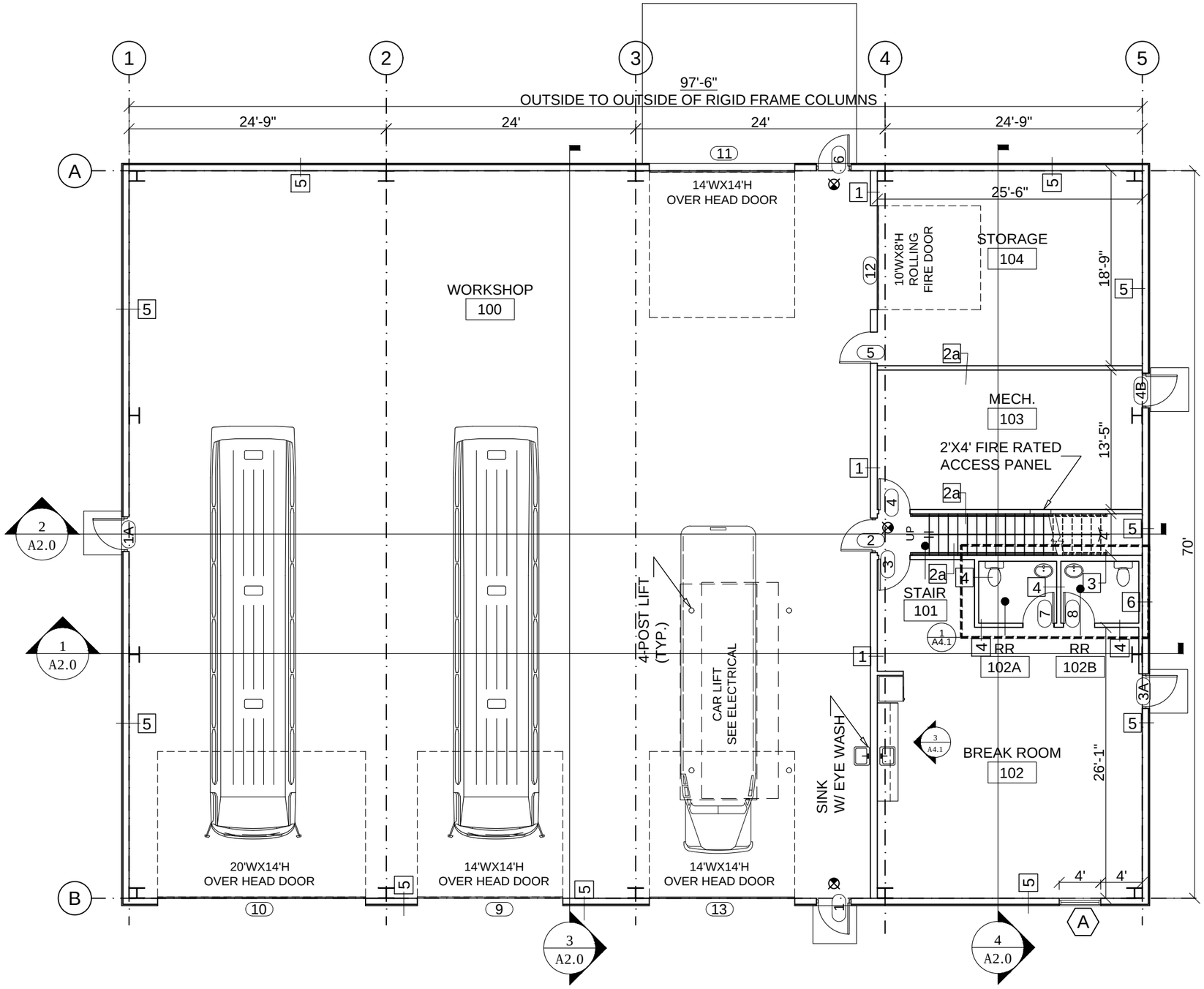


## 1 MAIN FLOOR PLAN

SCALE: 3/32" = 1'-0" [11"X17"]
3/16" = 1'-0" [22"X34"]

NORTH

**NOTE:**

1. THE BUILDING HAS NO SPRINKLER SYSTEM
2. THE CONTRACTOR SHALL PROVIDE FIRE ALARM SYSTEM IF NEEDED IN THE RIGHT LOCATIONS.

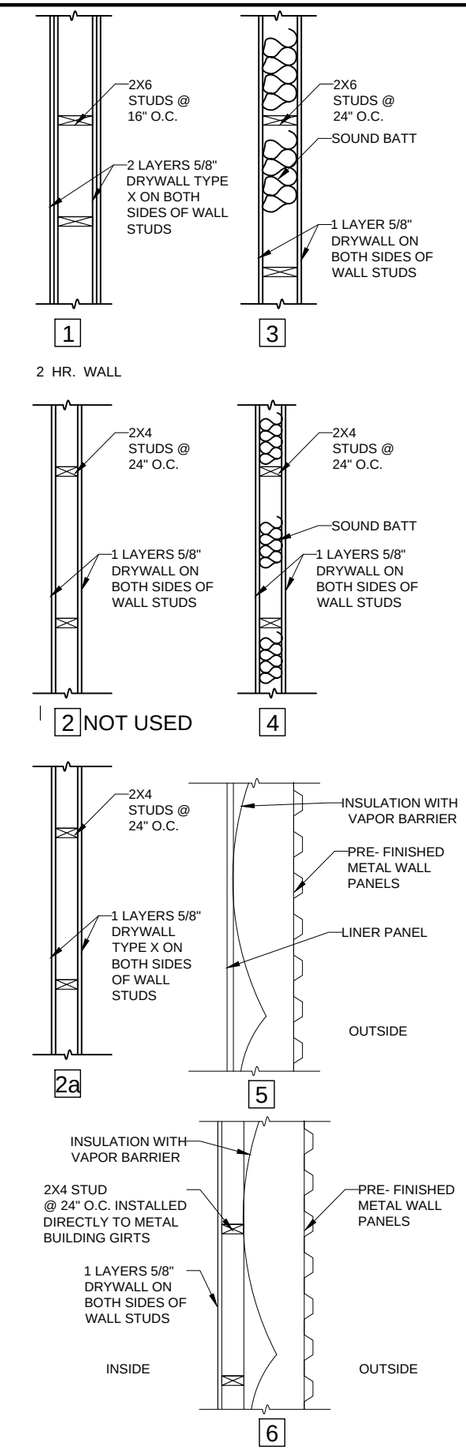


## 2 WALL TYPES

SCALE: 3/4" = 1'-0" [11"X17"]
1 1/2" = 1'-0" [22"X34"]

**REVIEW SET**
**NOT FOR**
**CONSTRUCTION**


Engineering International
(308) 340-9563
P.O.Box 401
402 Norris Ave. Suite 107
McCook NE 69001-0401


**NEW (99' X 70') SCHOOL BUS BARN**
CHASE COUNTY SCHOOLS
**IMPERIAL, NEBRASKA**

MAIN FLOOR PLAN
(OPTION 1)

DATE 3.23.2017

SCALE 3/32"=1'-0"

A1.0

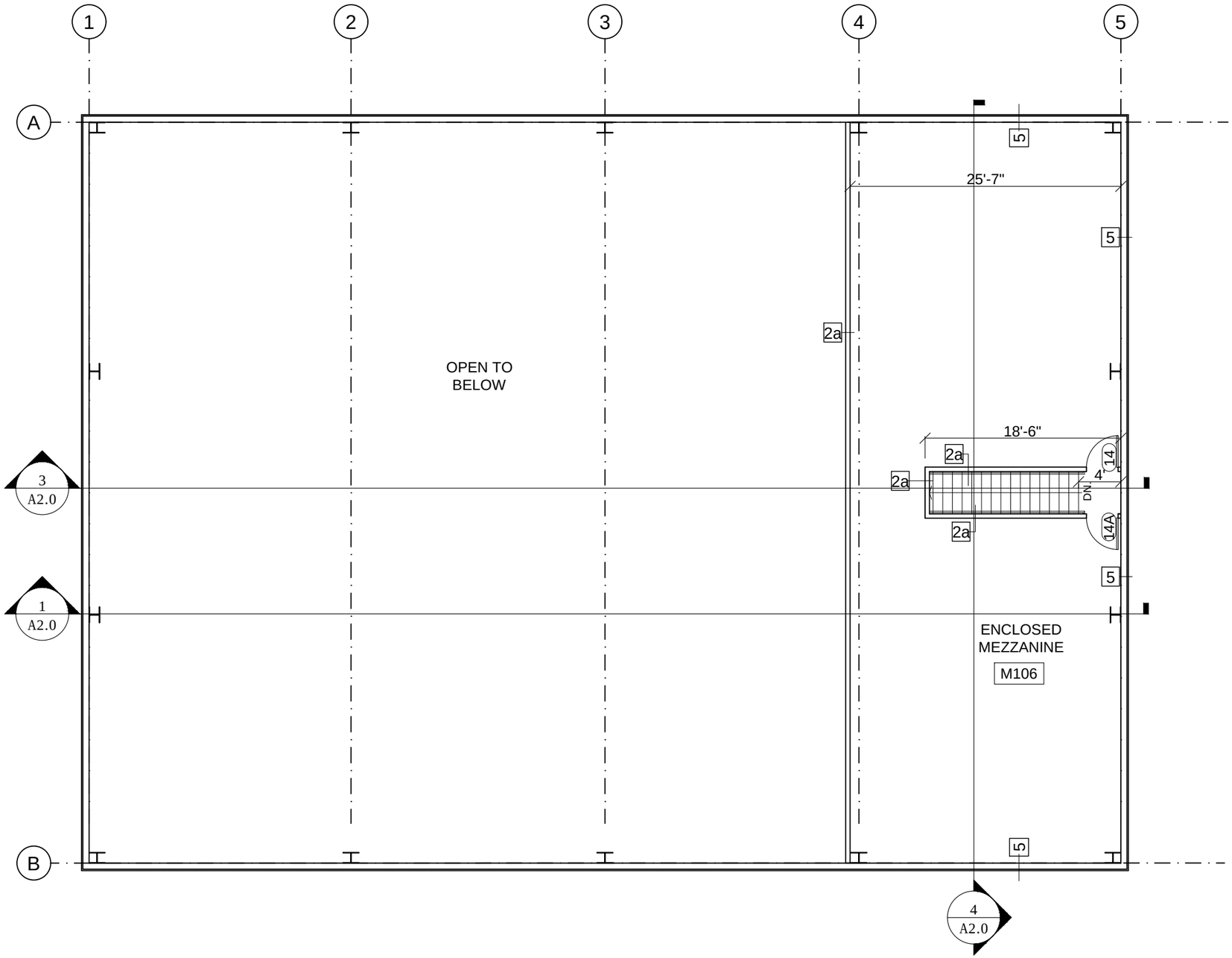


1 **MEZZ. FLOOR PLAN**

SCALE: 3/32" = 1'-0" [11"X17"]
3/16" = 1'-0" [22"X34"]

NORTH

REVIEW SET
NOT FOR
CONSTRUCTION


Engineering International
(308) 340-5943
P.O. Box 401
402 Norris Avenue, Suite 107
McCook NE 69001-0401


NEW (99' X 70') SCHOOL BUS BARN
CHASE COUNTY SCHOOLS
IMPERIAL, NEBRASKA

MEZZ. FLOOR PLAN

DATE 3.23.2017

SCALE 3/32"=1'-0"

A1.1

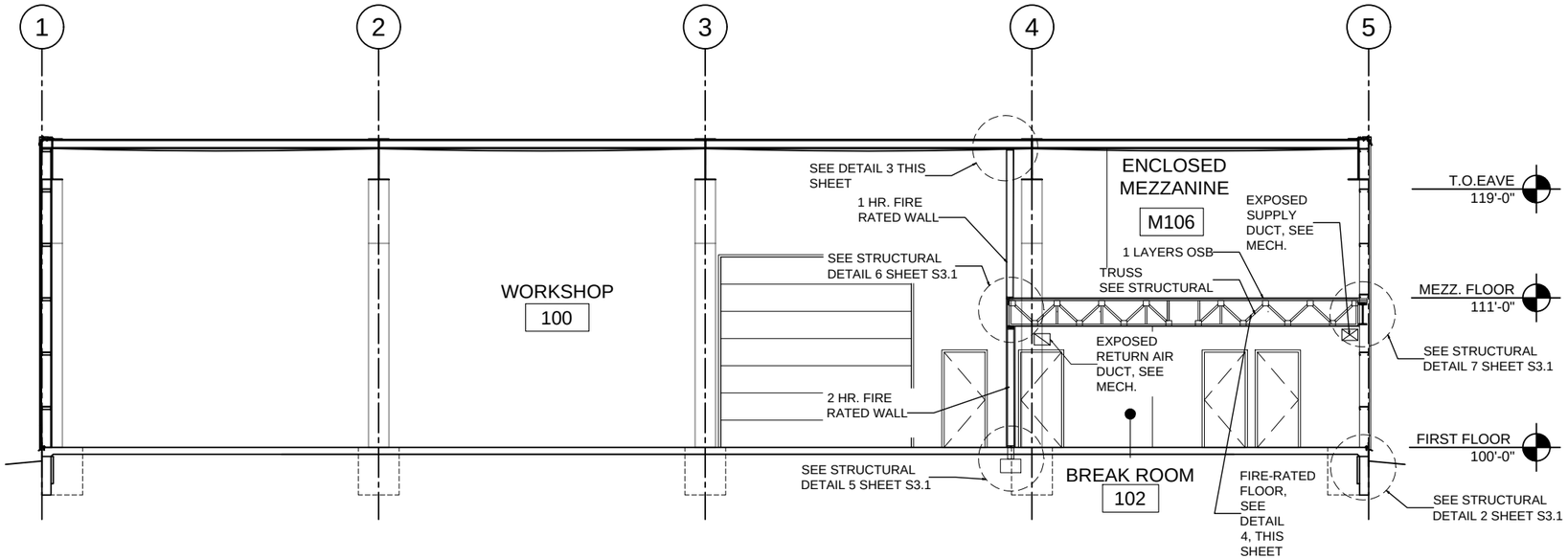


## 1 BUILDING SECTION

SCALE: 3/32" = 1'-0" [11"X17"]
3/16" = 1'-0" [22"X34"]

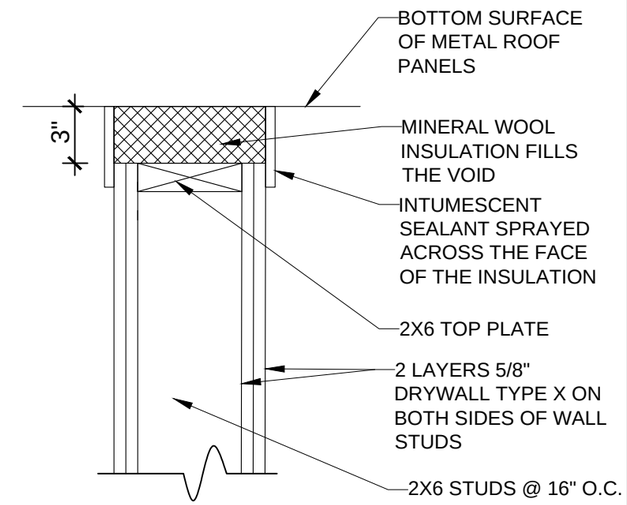


## 3 HEAD OF 2 HR WALL

SCALE: 1 1/2" = 1'-0" [11"X17"]
3" = 1'-0" [22"X34"]

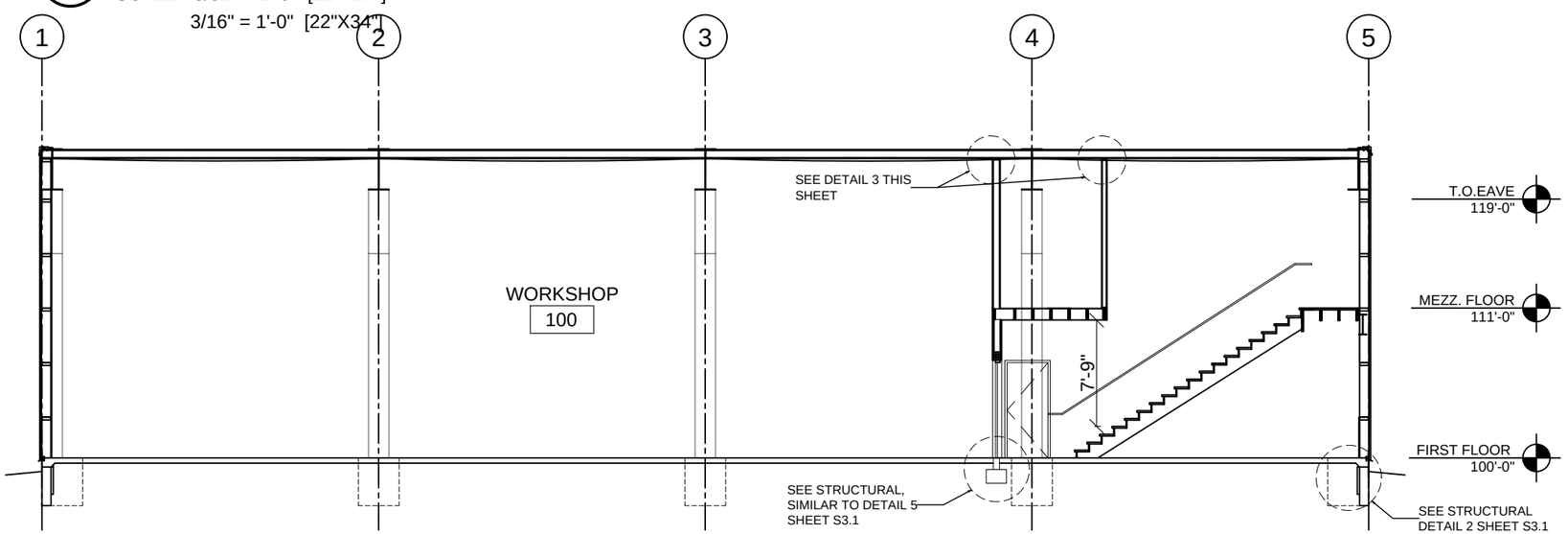


## 2 BUILDING SECTION

SCALE: 3/32" = 1'-0" [11"X17"]
3/16" = 1'-0" [22"X34"]

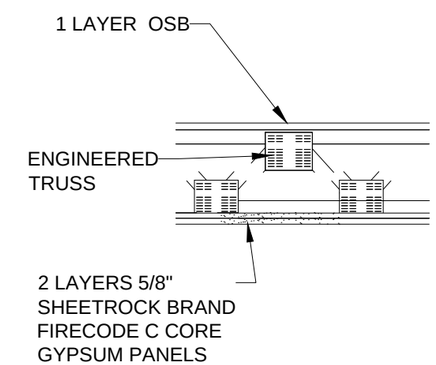


1 HR FIRE RATED MEZZ. FLOOR

## 4 MEZZ. FLOOR DETAIL

SCALE: 3/32" = 1'-0" [11"X17"]
3/16" = 1'-0" [22"X34"]

REVIEW SET
NOT FOR CONSTRUCTION


Engineering International
(308) 340-5963
P.O.Box 401
402 North Adams
McCook NE 69001-0401


NEW (99' X 70') SCHOOL BUS BARN
CHASE COUNTY SCHOOLS
IMPERIAL, NEBRASKA

BUILDING SECTIONS (OPTION 1)

DATE 3.23.2017

SCALE 3/32"=1'-0"

A2.0

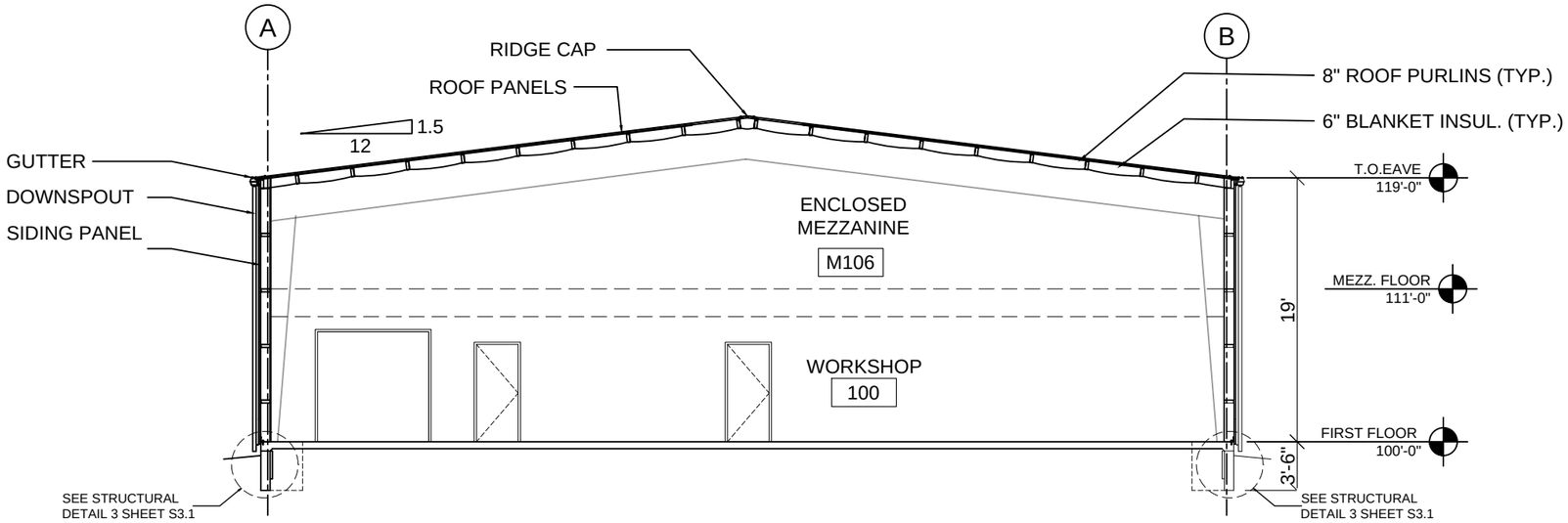


3 **BUILDING SECTION**

SCALE: 3/32" = 1'-0" [11"X17"]
3/16" = 1'-0" [22"X34"]

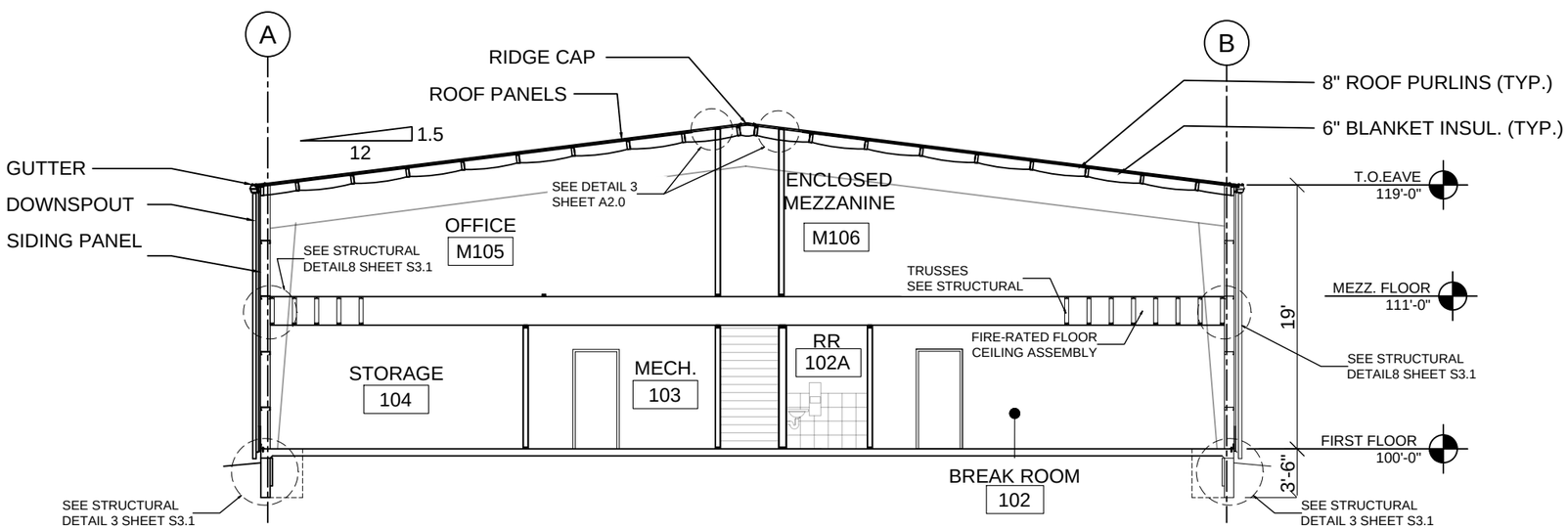


4 **BUILDING SECTION**

SCALE: 3/32" = 1'-0" [11"X17"]
3/16" = 1'-0" [22"X34"]

**REVIEW SET**
**NOT FOR**
**CONSTRUCTION**


Engineering International
(308) 340-5943
P.O. Box 401
402 Norris Ave. Ste. 107
McCook NE 69001-0401


**NEW (99' X 70') SCHOOL BUS BARN**
CHASE COUNTY SCHOOLS
**IMPERIAL, NEBRASKA**

BUILDING SECTION
(OPTION 1)

DATE 3.23.2017

SCALE 3/32"=1'-0"

A2.1

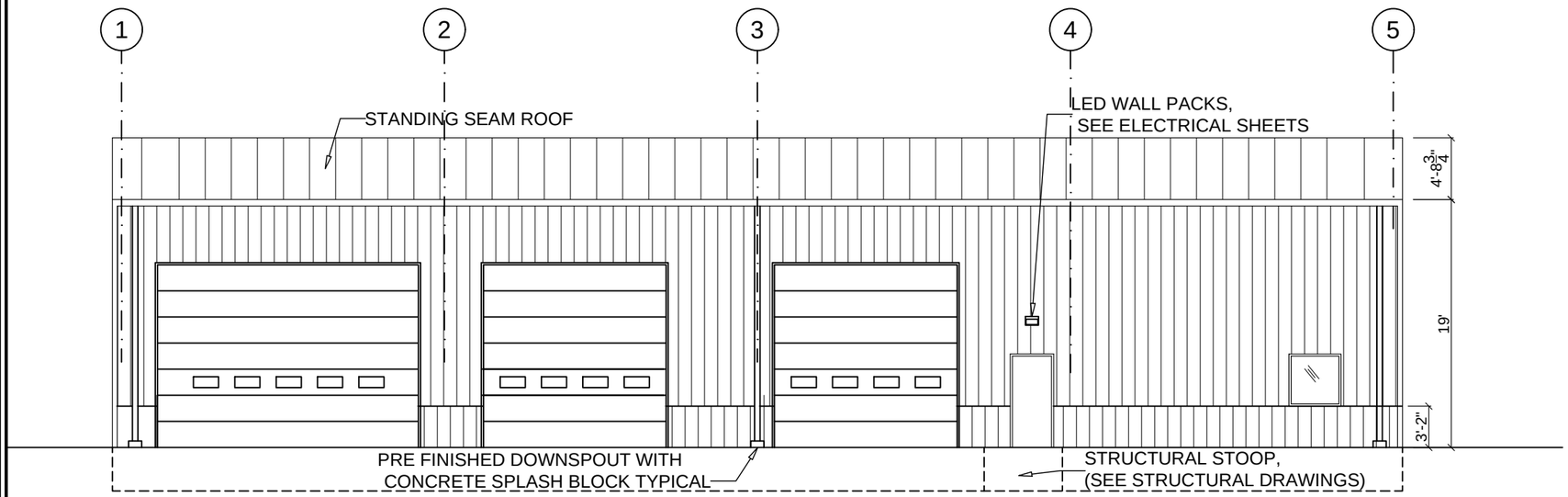


## 1 SOUTH ELEVATION

SCALE: 3/32" = 1'-0" [11"X17"]
3/16" = 1'-0" [22"X34"]

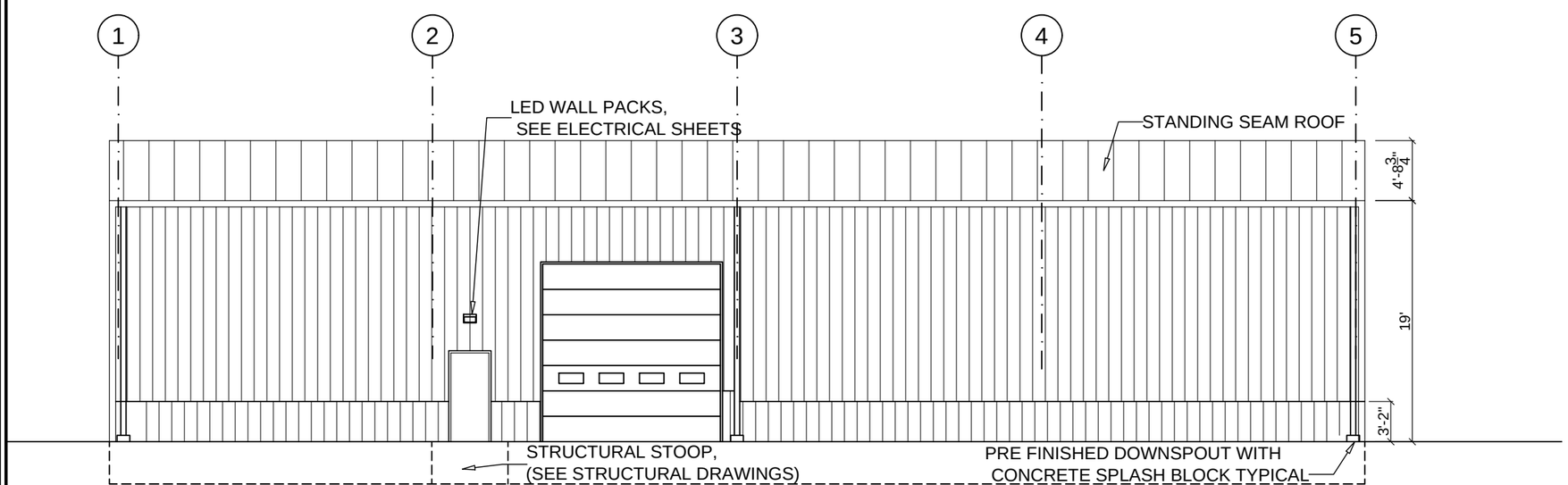


## 2 NORTH ELEVATION

SCALE: 3/32" = 1'-0" [11"X17"]
3/16" = 1'-0" [22"X34"]

**REVIEW SET**
**NOT FOR**
**CONSTRUCTION**


Engineering International
(308) 340-5943
P.O.Box 401
402 Norris Ave Suite 107
McCook NE 69001-0401


**NEW (99' X 70') SCHOOL BUS BARN**
CHASE COUNTY SCHOOLS
**IMPERIAL, NEBRASKA**

ELEVATIONS
(OPTION1)

DATE 3.23.2017

SCALE 3/32"=1'-0"

A3.0

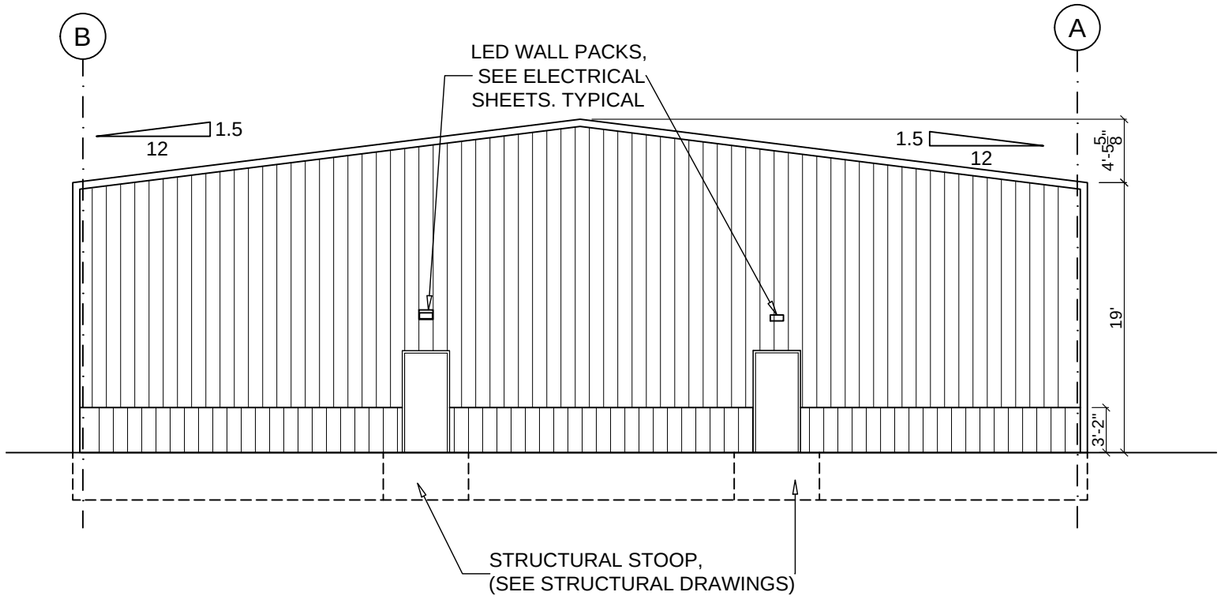


## 3 EAST ELEVATION

SCALE: 3/32" = 1'-0" [11"X17"]
3/16" = 1'-0" [22"X34"]

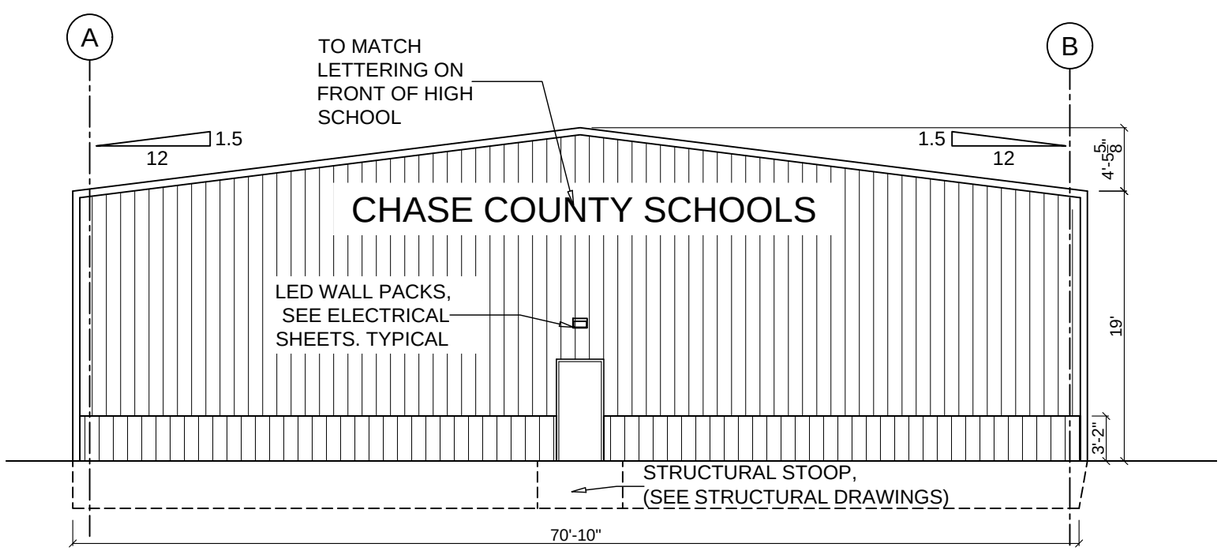


## 4 WEST ELEVATION

SCALE: 3/32" = 1'-0" [11"X17"]
3/16" = 1'-0" [22"X34"]

REVIEW SET
NOT FOR
CONSTRUCTION

Engineering International
(308) 340-5943
P.O.Box 401
402 North Adams, Ste. 107
McCook NE 69001-0401

NEW (99' X 70') SCHOOL BUS BARN
CHASE COUNTY SCHOOLS
IMPERIAL, NEBRASKA

A3.1

DATE 3.23.2017

SCALE 3/32"=1'-0"

---

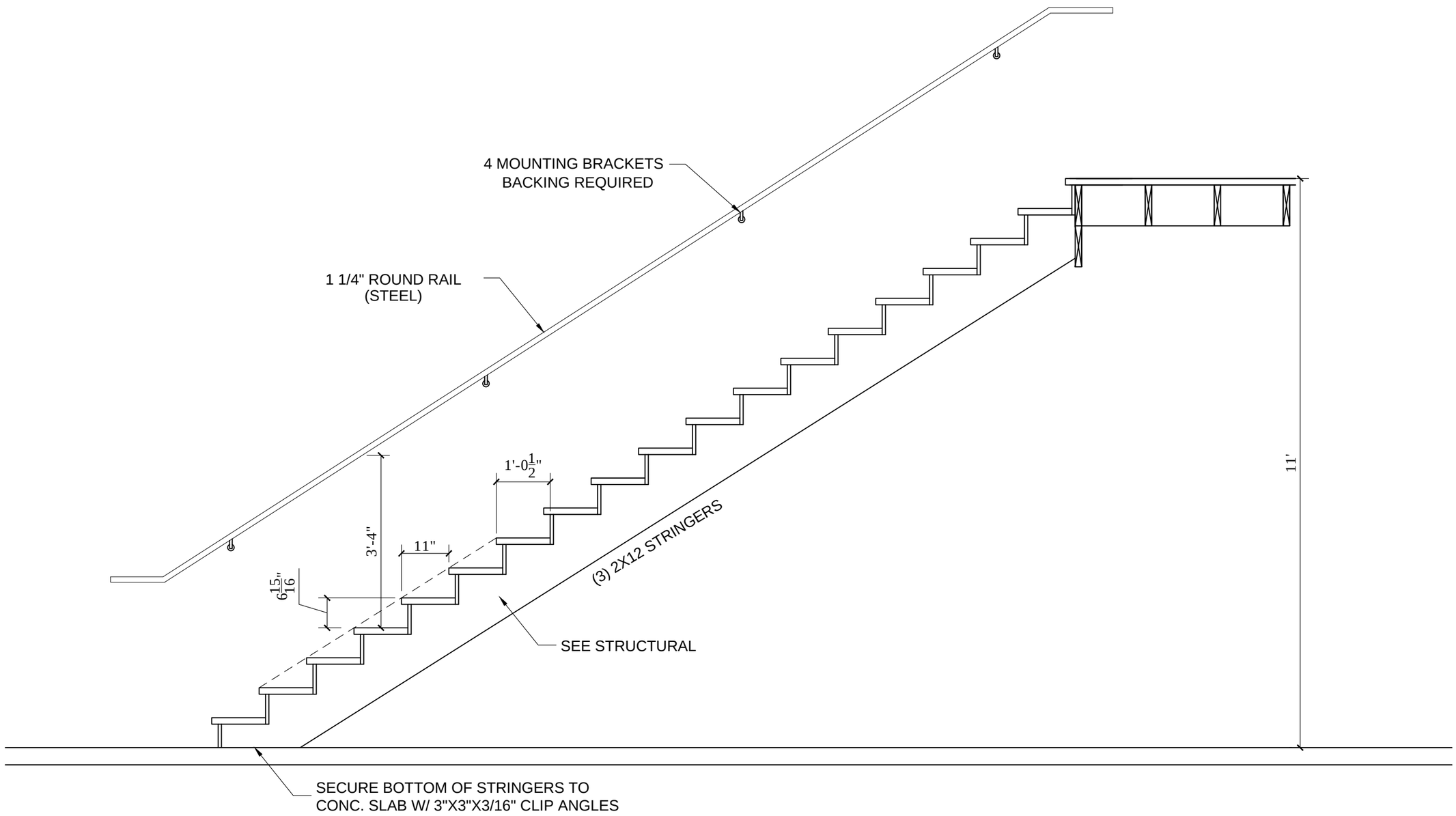


3

## STAIR DETAILS

SCALE: 1/2" = 1'-0" [11"X17"]
1" = 1'-0" [22"X34"]

REVIEW SET
NOT FOR
CONSTRUCTION


Engineering International
(308) 340-5943
P.O.Box 401
402 Norris Ave Suite 107
McCook NE 69001-0401


NEW (99' X 70') SCHOOL BUS BARN
CHASE COUNTY SCHOOLS
IMPERIAL, NEBRASKA

STAIR DETAILS

DATE 3.23.2017

SCALE 1/2"=1'-0"

A4.0

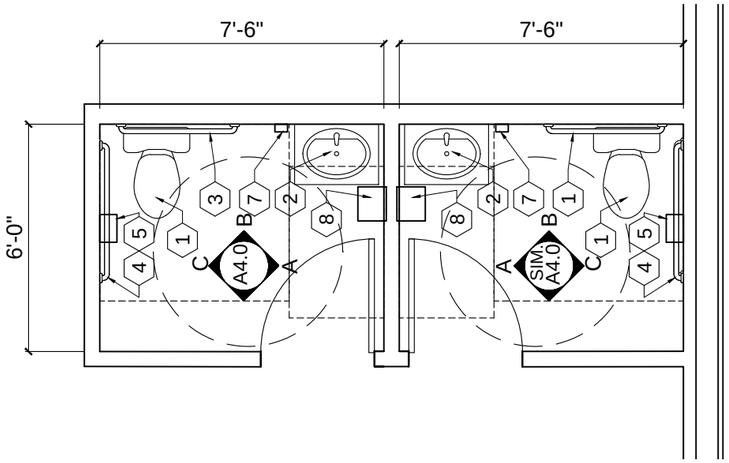


## 1 ENLARGED BATHROOMS PLAN

SCALE: 1/4" = 1'-0" [11"X17"]
1/2" = 1'-0" [22"X34"]

NOTE:
EXPOSED PIPES AND SURFACES. HOT WATER AND DRAIN PIPES UNDER LAVATORIES SHALL BE INSULATED OR OTHERWISE CONFIGURED TO PROTECT AGAINST CONTACT. THERE SHALL BE NO SHARP OR ABRASIVE SURFACES UNDER LAVATORIES.

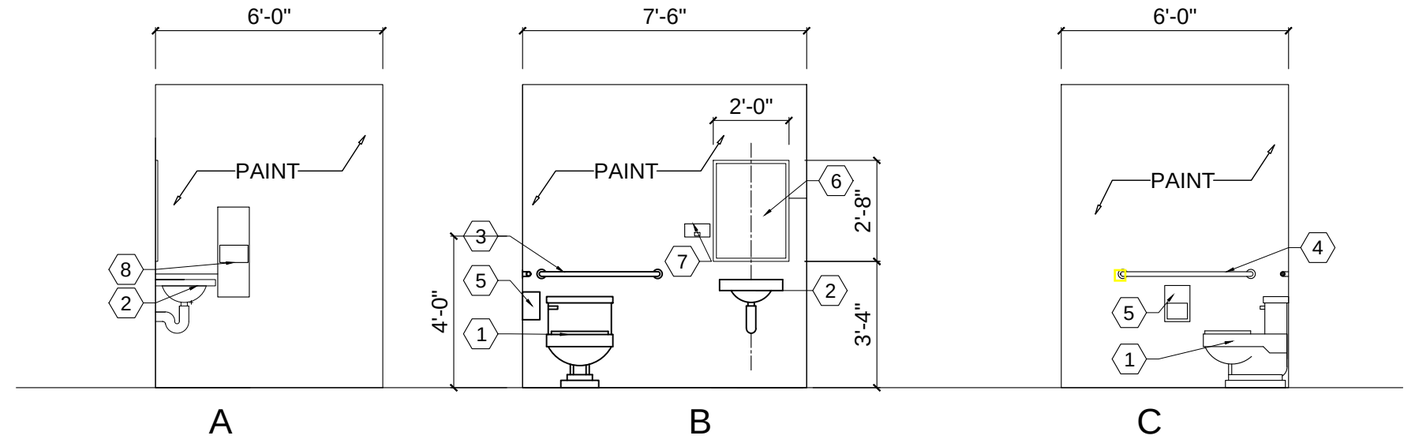


## 2 BATHROOM INTERIOR ELEVATIONS

SCALE: 1/4" = 1'-0" [11"X17"]
1/2" = 1'-0" [22"X34"]

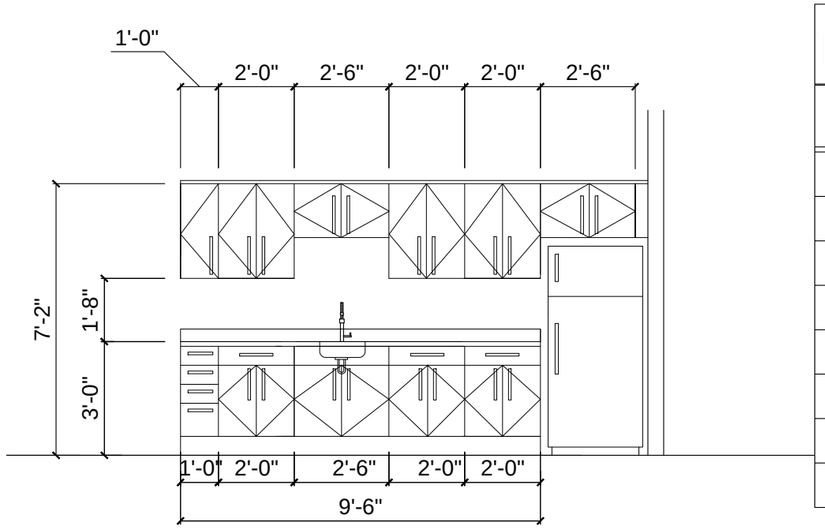


## RESTROOM FIXTURES SCHEDULE

| # | ACCESSORY NAME | NOTES |
|---|---|---|
| 1 | WATER CLOSET | SEE PLUMBING |
| 2 | LAVATORY | SEE PLUMBING |
| 3 | GRAB BAR, 36" LONG | MOEN OR EQUAL |
| 4 | GRAB BAR, 42" LONG | MOEN OR EQUAL |
| 5 | TOILET TISSUE DISPENSER | BRADLEY OR EQUAL, RECESSED HINGED-HOOD STACKING ROLLS |
| 6 | MIRROR | BOBRICK OR EQUAL |
| 7 | SOAP DISPENSER | BOBRICK® MATRIXSERIES™ SURFACE MOUNTED SOAP DISPENSER - B-5050 OR EQUAL |
| 8 | PAPER TOWEL DISPENSER | BOBRICK OR EQUAL |

## 3 KITCHEN INTERIOR ELEVATION

SCALE: 1/4" = 1'-0" [11"X17"]
1/2" = 1'-0" [22"X34"]

REVIEW SET
NOT FOR CONSTRUCTION


Engineering International
(308) 340-5943
P.O.Box 401
402 Norris Avenue
McCook NE 69001-0401


NEW (99' X 70') SCHOOL BUS BARN
CHASE COUNTY SCHOOLS
IMPERIAL, NEBRASKA

INTERIOR ELEVATIONS

DATE 3.23.2017

SCALE 1/4"=1'-0"

A4.1

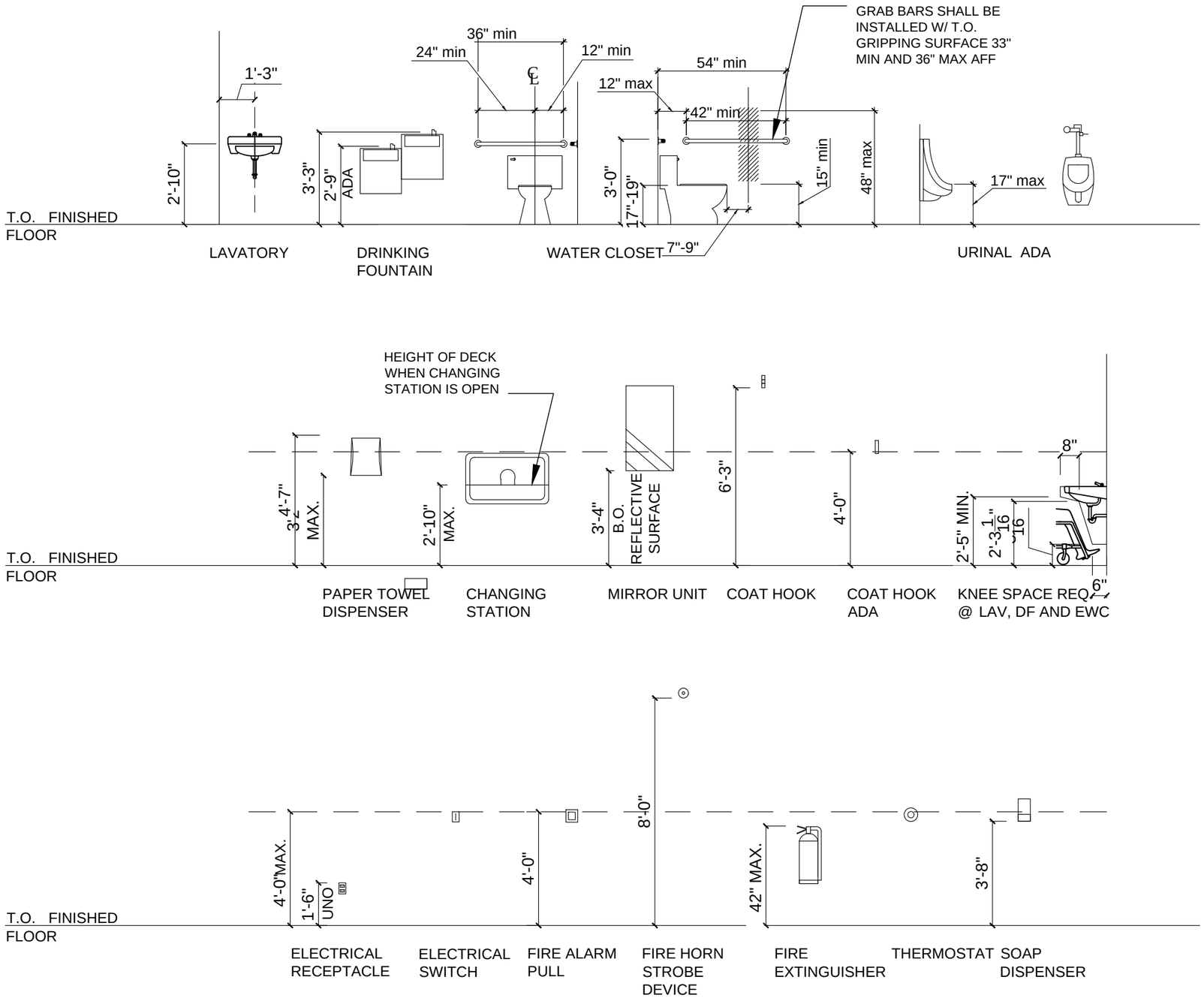


## NOTES:

1. LEGEND INDICATES RECOMMENDED MOUNTING HEIGHTS. CONTRACTOR SHALL COORDINATE SPECIFIC MOUNTING HEIGHTS WITH MANUFACTURES' REQUIREMENTS FOR HANDICAPPED ACCESSIBILITY.
2. ACCESSORIES SHALL NOT PROJECT MORE THAN 4" FROM THE WALL IF THEIR LEADING EDGE IS BETWEEN 27" AND 80" ABOVE THE FINISH FLOOR
3. OPERABLE PARTS (CONTROLS) SHALL BE LOCATED A MINIMUM OF 15". AND A MAXIMUM OF 48", ABOVE THE FINISHED FLOOR.
4. PROVIDE SOLID BLOCKING BEHIND ALL WALL HUNG FIXTURES.
5. EXPOSED PIPES AND SURFACES. HOT WATER AND DRAIN PIPES UNDER LAVATORIES SHALL BE INSULATED OR OTHERWISE CONFIGURED TO PROTECT AGAINST CONTACT. THERE SHALL BE NO SHARP OR ABRASIVE SURFACES UNDER LAVATORIES.

1 **MOUNTED HEIGHT LEGEND**

SCALE: 1/4" = 1'-0" [11"X17"]
1/2" = 1'-0" [22"X34"]

**REVIEW SET NOT FOR CONSTRUCTION**


Engineering International
(308) 340-5943
P.O Box 401
402 Norris Ave. Suite 107
McCook NE 69001-0401


**NEW (99' X 70') SCHOOL BUS BARN**
CHASE COUNTY SCHOOLS
**IMPERIAL, NEBRASKA**

ACCESSIBLE FIXTURES AND ACCESSORIES

DATE 3.23.2017

SCALE N.T.S

A4.2

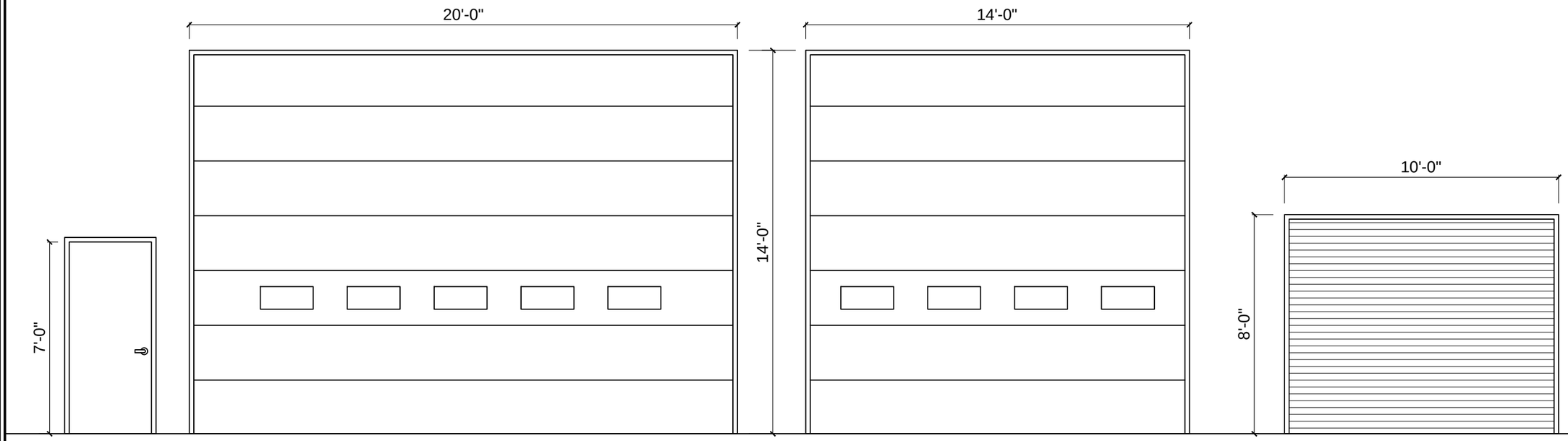


A

B
OVERHEAD DOOR

C
OVERHEAD DOOR

D
ROLLING SHUTTER DOOR - METAL

## DOOR NOTES:

1. PROVIDE SIGN IN 1" HIGH LETTERS STATING: "THIS DOOR IS TO REMAIN UNLOCKED WHEN BLDG IS OCCUPIED", AT EXTERIOR DOOR 1 AND DOOR 6.
2. REINFORCE JAMBS WITH WOOD BLOCKING.
3. PROVIDE HANDICAPPED ACCESSIBILITY DECAL.
4. CONTRACTOR TO PROVIDE AND INSTALL DOOR SWEEP ON ALL EXTERIOR DOORS TO PREVENT WATER, WIND AND DEBRIS INFILTRATION.

## GENERAL HARDWARE NOTES:

1. THRESHOLD AT EGRESS DOOR SHALL BE NO MORE THE 1/2" (MAX) HEIGHT AFF.
2. LOCK SETS TO BE SUCH THAT THE LOCKING DEVICE IS READILY DISTINGUISHABLE AS LOCKED.
3. LOCK SETS TO BE SUCH THAT DOOR IS OPERABLE BY SINGLE HANDED LEVER OPERATION FROM THE EGRESS SIDE WITHOUT THE USE OF A KEY OR SPECIAL KNOWLEDGE OR EFFORT.
4. CLOSER TO COMPLY WITH A.D.A. SECTION 4.13.10. & SHALL REQUIRE NO MORE THAN 5LBS OPENING FORCE AND MIN. 3 SEC TO CLOSE PANIC HARDWARE = RIM TYPE DEVICE.
5. ALL DOOR HARDWARE TO COMPLY W/ A.D.A. / N.A.G. 4.13.9, 4.13.10 AND 4.13.11 AND BE EITHER PUSH TYPE OR LEVER HANDLE, SINGLE HANDED OPERATION AND MOUNTED NO HIGHER THAN 48" A.F.F.
6. SWINGING DOOR GLASS MUST BE SAFETY GLASS.

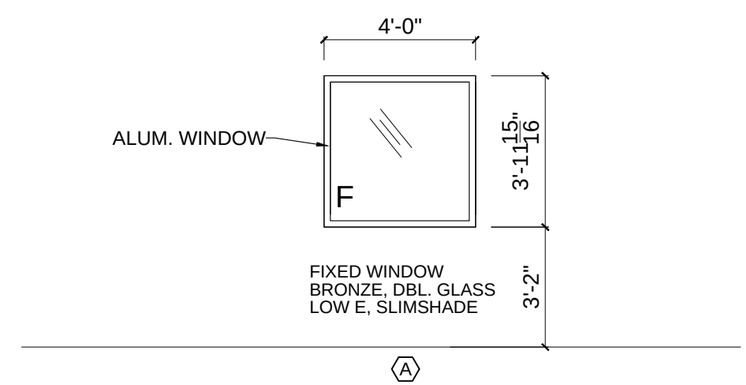


WINDOW TYPES

SCALE 1/4"=1'-0"

**REVIEW SET NOT FOR CONSTRUCTION**


Engineering International
(308) 340-5943
P.O. Box 401
402 Norris Ave. Suite 107
McCook NE 69001-0401


**NEW (99' X 70') SCHOOL BUS BARN**
CHASE COUNTY SCHOOLS
**IMPERIAL, NEBRASKA**

DOOR SCHEDULE

DATE 3.23.2017

SCALE 1/4"=1'-0"

A5.0

# DOOR SCHEDULE

| NO. | DOOR SIZE | TYPE | DOOR MAT'L | FRAME MAT'L | FIRE RATE | HARDWARE: DEAD BOLT | LOCKSET | PRIVACY | PASSAGE | PUSH/PULL | PANIC | CLOSER | SMOKE SEAL | CARD STRIKE | THRESHOLD | MAG. HOLD | NOTES |
|---|---|---|---|---|---|---|---|---|---|---|---|---|---|---|---|---|---|
| **MAIN FLOOR** | | | | | | | | | | | | | | | | | |
| 1 | 3'-0" X 7'-0" | A | HM | HM | | | X | | | | | | | | X | | |
| 1A | 3'-0" X 7'-0" | A | HM | HM | | | X | | | | | | | | X | | |
| 2 | 3'-0" X 7'-0" | A | WD | HM | 90 MIN | | | | X | | | X | | | | | |
| 3 | 3'-0" X 7'-0" | A | WD | HM | 60 MIN | | | | X | | | X | | | | | |
| 3A | 3'-0" X 7'-0" | A | HM | HM | | | X | | | | | | | | X | | |
| 4 | 3'-0" X 7'-0" | A | WD | HM | 60 MIN | | | | X | | | X | | | | | |
| | | | | | | | | | | | | | | | | | |
| 4B | 3'-0" X 7'-0" | A | HM | HM | | | X | | | | | | | | X | | |
| 5 | 3'-0" X 7'-0" | A | WD | HM | 90 MIN | | | | X | | | X | | | | | |
| 6 | 3'-0" X 7'-0" | A | HM | HM | | | X | | | | | | | | X | | |
| 7 | 3'-0" X 7'-0" | A | WD | HM | | | | X | | | | | | | | | |
| 8 | 3'-0" X 7'-0" | A | WD | HM | | | | X | | | | | | | | | |
| 9 | 14'-0" X 14'-0" | C | ALUM. | | | | | | | | | | | | | | |
| 10 | 20'-0" X 14'-0" | B | ALUM. | | | | | | | | | | | | | | |
| 11 | 14'-0" X 14'-0" | C | ALUM. | | | | | | | | | | | | | | |
| 12 | 10'-0" X 8'-0" | D | STEEL | | 90 MIN | | | | | | | | | | | | |
| 13 | 14'-0" X 14'-0" | C | ALUM. | | | | | | | | | | | | | | |
| **MEZZANINE** | | | | | | | | | | | | | | | | | |
| 14 | 3'-0" X 7'-0" | A | WD | HM | 60 MIN | | | | X | | | X | | | | | |
| 14A | 3'-0" X 7'-0" | A | WD | HM | 60 MIN | | | | X | | | X | | | | | |

**REVIEW SET NOT FOR CONSTRUCTION**


Engineering International
(308) 340-5943
P.O.Box 401
402 Norris Ave Suite 107
McCook NE 69001-0401


**NEW (99' X 70') SCHOOL BUS BARN**
CHASE COUNTY SCHOOLS
**IMPERIAL, NEBRASKA**

DOOR SCHEDULE

DATE 3.23.2017

SCALE N.T.S

A5.1

# ROOM FINISH SCHEDULE

| ROOM NUMBER | ROOM NAME | FLOOR | | WALLS | | | | | | | | CEILING | | | NOTES |
|---|---|---|---|---|---|---|---|---|---|---|---|---|---|---|---|
| | | | | NORTH | | SOUTH | | WEST | | EAST | | | | | |
| | | Floor Mat'l | Base Mat'l | MAT. | FIN. | MAT. | FIN. | MAT. | FIN. | MAT. | FIN. | Material | Ceiling Fin | Height | |
| 100 | WORKSHOP | SEALED CONCRETE | NONE/VINYL | LINER | | LINER | | LINER | | GYP. BD. | PAINT | OPEN | | | |
| 101 | STAIR | SEALED CONCRETE | VINYL | GYP. BD. | PAINT | GYP. BD. | PAINT | GYP. BD. | PAINT | LINER | | | | | |
| 102 | BREAK ROOM | VINYL | VINYL | GYP. BD. | PAINT | LINER | | GYP. BD. | PAINT | LINER | | GYP. BD. | PAINT | 9'-0" | |
| 102A | MEN'S RESTROOM | SEALED CONCRETE | VINYL | GYP. BD. | PAINT | GYP. BD. | PAINT | GYP. BD. | PAINT | GYP. BD. | PAINT | GYP. BD. | PAINT | 9'-0" | |
| 102B | WOMEN'S RESTROOM | SEALED CONCRETE | VINYL | GYP. BD. | PAINT | GYP. BD. | PAINT | GYP. BD. | PAINT | GYP. BD. | PAINT | GYP. BD. | PAINT | 9'-0" | |
| 103 | MECHANICAL ROOM | SEALED CONCRETE | VINYL | GYP. BD. | PAINT | GYP. BD. | PAINT | GYP. BD. | PAINT | LINER | | GYP. BD. | PAINT | 9'-0" | |
| 104 | STORAGE | SEALED CONCRETE | VINYL | LINER | | GYP. BD. | PAINT | GYP. BD. | PAINT | LINER | | GYP. BD. | PAINT | 9'-0" | |
| | | | | | | | | | | | | | | | |
| M106 | STORAGE DECK | DECK SHEATHING | NONE | LINER | | LINER | | GYP. BD. | PAINT | LINER | | OPEN | | | |

**REVIEW SET NOT FOR CONSTRUCTION**


Engineering International
(308) 340-5943
P.O.Box 401
402 Norris Ave Suite 107
McCook NE 69001-0401


**NEW (99' X 70') SCHOOL BUS BARN**
CHASE COUNTY SCHOOLS
**IMPERIAL, NEBRASKA**

ROOM FINISH SCHEDULE

DATE 3.23.2017

SCALE N.T.S

A5.2

# GENERAL STRUCTURAL

CONTRACT DOCUMENTS ARE INTENDED TO CONVEY THE STRUCTURAL DESIGN INTENT. THEY REPRESENT THE STRUCTURAL SYSTEMS, MATERIALS USED, TYPICAL DETAILS AND SPECIFIC DETAILS OF THE COMPLETED STRUCTURE. DETAILS MAY NEED TO BE ADAPTED BY THE CONTRACTOR, SUBCONTRACTOR, OR SUPPLIER IN SOME LOCATIONS. ANY DIVERGENCE FROM THESE DRAWINGS SHALL BE APPROVED BY THE ARCHITECT AND EOR AND SHALL BE CONSISTENT WITH THE DESIGN INTENT SHOWN.

1. GENERAL CONTRACTORS RESPONSIBILITIES INCLUDE BUT ARE NOT LIMITED TO:
   a. DETERMINE CONSTRUCTION SEQUENCE AND PROCEDURES.
   b. PROVIDING A SAFE JOBSITE FOR WORKERS, SUBCONTRACTORS, TESTING AND INSPECTION AGENCIES, AND DESIGN PROFESSIONALS.
   c. DESIGN AND INSTALLATION OF ALL SHORING AND TEMPORARY BRACING NECESSARY TO INSURE THE SAFETY OF THE BUILDING, IT'S COMPONENTS AND OCCUPANTS.
   d. VERIFY AND COORDINATE DIMENSIONS AND ELEVATIONS SHOWN IN THE DRAWINGS. IF DISCREPANCIES EXIST THE CONTRACTOR SHALL NOTIFY THE ARCHITECT PRIOR TO COMMENCING THAT PROCEDURE.
   e. COORDINATE THE LOCATION AND LOADS OF MECHANICAL AND OWNER EQUIPMENT WITH THE STRUCTURE. OPENINGS AND EQUIPMENT SHOWN IN THE DRAWINGS ARE REPRESENTATIVE OF EQUIPMENT THAT MAY BE USED ON THIS PROJECT AND WHAT WAS USED AS THE BASIS FOR THE STRUCTURAL DESIGN, AND BIDDING PURPOSES. DEVIATIONS SHALL BE APPROVED BY ARCHITECT AND EOR.
   f. PROTECTING FOUNDATIONS FROM FROST DURING CONSTRUCTION. REFER TO SOILS REPORT FOR FURTHER INFORMATION.
2. IF CONFLICTS EXIST IN THE CONSTRUCTION DOCUMENTS THE STRICTEST PROVISIONS SHALL GOVERN.
3. DETAILS SHOWN IN TYPICAL LOCATIONS SHALL APPLY TO ALL LOCATIONS WITH THE SAME OR SIMILAR CONDITIONS.

## REINFORCED CONCRETE

1. REFER TO DESIGN DATA.
2. ACI FIELD REFERENCE MANUAL, SP-15 SHALL BE FOLLOWED. AT LEAST ONE COPY SHALL BE AVAILABLE ON SITE DURING CONCRETING OPERATIONS.
3. PROVIDE CONTROL JOINTS IN SLAB ON GRADE AS INDICATED BY THE DRAWINGS. IF NO CONTROL JOINTS ARE SHOWN PROVIDE CONTROL JOINTS NO FURTHER THAN 36 TIMES THE SLAB THICKNESS (4" THICK SLAB = 12'-0). CONTROL JOINTS SHALL PROVIDE A SQUARE SECTION WITH THE LENGTH NO GREATER THAN 1 1/2 TIMES THE WIDTH.
4. ALL CIP AND CMU WALLS SHALL BE CONNECTED TO THE FOUNDATION WITH DOWELS THAT MATCH THE WALL REINFORCING SIZE AND SPACING.
5. REFER TO SCHEDULES FOR TYPICAL REINFORCING DETAILS.
6. REBAR SHALL BE SPLICED TO PROVIDE A MINIMUM LAP AS FOLLOWS. TOP BARS ARE HORIZONTAL REINFORCING THAT ARE PLACED WITH 12" OR MORE OF CONCRETE BELOW THE BAR.

| BAR SIZE | TYP BAR | TOP BAR |
|---|---|---|
| #3 | 19" | 24" |
| #4 | 25" | 32" |
| #5 | 31" | 40" |
| #6 | 37" | 48" |
| #7 | 54" | 70" |
| #8 | 62" | 80" |
| #9 | 70" | 91" |
| #10 | 79" | 102" |
| #11 | 87" | 113" |

7. PROVIDE CONCRETE COVER FOR ALL REINFORCING AS FOLLOWS
   a. CAST AGAINST AND PERMANENTLY EXPOSED TO EARTH _____ 3"
   b. EXPOSED TO EARTH OR WEATHER
      #6 BAR AND LARGER _____ 3"
      #5 BAR AND SMALLER _____ 1 1/2"
   c. INTERIOR EXPOSURE
      BEAMS & COLUMNS _____ 1 1/2"
      WALLS _____ 1 1/2"
      SLABS AND JOISTS _____ 3/4"
8. PROVIDE AN ADDITIONAL 2- #5 BARS AROUND ALL RECTANGULAR OPENINGS IN CIP WALLS AND 1- #5 BAR AROUND ALL RECTANGULAR OPENINGS IN CIP SLABS. ADDITIONAL BAR SHALL EXTEND 24" MINIMUM BEYOND THE OPENING.
9. ALL REBAR, EXCLUDING DOWELS INTO FOUNDATION, TO BE PROPERLY CHAIRED AND SECURED PRIOR TO PLACING OF CONCRETE. WET SETTING OF REBAR IS NOT PERMITTED

## METAL DECK

1. REFER TO DESIGN DATA.
2. GALVANIZE ALL DECKING UNLESS OTHERWISE INDICATED BY THE ARCHITECT. PROVIDE MANUFACTURERS STANDARD RUST INHIBITIVE PAINT ON ALL OTHER ACCESSORIES.
3. ALL METAL DECK OPENINGS SHALL BE REINFORCED. FOR OPENINGS LESS THAN 8" REINFORCE WITH 2" x 20 GAGE x 2'-8 STRAP EACH SIDE OF OPENING WELDED TO TOP OF DECK. FOR OPENINGS GREATER THAN 8" REFER TO METAL DECK ATTACHMENT SCHEDULE FOR DETAILS.

## STRUCTURAL STEEL

1. REFER TO DESIGN DATA.
2. FIELD CUTTING OR OTHER FIELD MODIFICATION TO THE STRUCTURAL STEEL SHALL NOT BE MADE WITHOUT PRIOR APPROVAL OF THE EOR.
3. SIZES OF FILLET WELDS NOT SHOWN SHALL CONFORM TO THE MINIMUM SIZES AS SPECIFIED BY AISC "SPECIFICATIONS FOR STRUCTURAL STEEL BUILDINGS."
4. PROVIDE TWO COATS OF ASPHALTIC PAINT ON ALL STRUCTURAL STEEL EXPOSED TO THE SOIL OR BELOW SLAB ON GRADE.

## STRUCTURAL LUMBER

1. REFER TO DESIGN DATA.
2. NAILING OF MEMBERS SHALL COMPLY WITH THE REQUIREMENTS OF IBC 2006 TABLE 2304.9.1 "FASTENING SCHEDULE."
3. UNLESS NOTED OTHERWISE NAILS CONNECTING FRAMING MEMBERS SHALL BE .131 x 3 1/2 P-NAILS. NAILS CONNECTING SHEATHING TO FRAMING MEMBERS SHALL BE .131 x 2 1/2 P-NAILS.
4. ALL CONNECTORS, NAILS, BOLTS, OR OTHER FASTENERS USED WITH ALL TREATED LUMBER AND PLYWOOD SHALL BE HOT DIPPED GALVANIZED OR STAINLESS STEEL ALLOYS 304 OR 316.
5. GLUE FLOOR SHEATHING TO FRAMING AND TONGUE GROVE JOINTS WITH ADHESIVES MEETING APA SPECIFICATIONS APG-01 AND APPLIED IN ACCORDANCE WITH MANUFACTURER'S RECOMMENDATIONS.
6. PROVIDE SOLID BLOCKING AT ALL JOIST AND RAFTER BEARING LOCATIONS.
7. PROVIDE DOUBLE STUDS AT ALL LINTEL AND BEAM BEARING SUPPORTS. REFER TO SCHEDULE.
8. CONTINUE ALL ADDITIONAL STUD FRAMING BELOW BEAMS OR GIRDERS TO THE FOUNDATION.

## WOOD TRUSSES

1. REFER TO DESIGN DATA.
2. TRUSS MANUFACTURER SHALL BE RESPONSIBLE FOR THE DESIGN OF TRUSS MEMBERS AND IT'S SYSTEM INCLUDING:
   a. DESIGN ALL PERMANENT BRACING REQUIRED FOR SLENDER TRUSS MEMBERS.
   b. DESIGN OF TRUSS AND/OR BRACING REQUIRED FOR OUT OF PLANE BENDING (i.e. GABLE ENDS)
   c. DESIGN WIND UPLIFT CONNECTIONS TO THE STRUCTURE.
   d. SUBMIT ERECTION DRAWINGS AND PIECE DETAILS SHOWING TRUSS LAYOUT, PROFILES, BRACING AND ATTACHMENTS.
   e. STAMPED CALCULATIONS PREPARED BY A PROFESSIONAL ENGINEER REGISTERED IN THE STATE OF THE PROJECT.
3. TRUSS MANUFACTURER AND ERECTOR SHALL COMPLY WITH THE FOLLOWING STANDARDS:
   a. ANSI/TPI 1 "NATIONAL DESIGN STANDARD FOR METAL PLATE CONNECTED WOOD TRUSS CONSTRUCTION."
   b. TPI HIB "COMMENTARY AND RECOMMENDATIONS FOR HANDLING INSTALLING AND BRACING METAL PLATE CONNECTED WOOD TRUSSES."
   c. TPI DSB "RECOMMENDED DESIGN SPECIFICATION FOR TEMPORARY BRACING OF METAL PLATE CONNECTED WOOD TRUSSES."

# DESIGN DATA

GOVERNING CODE:_____ 2015 INTERNATIONAL BUILDING CODE

## FOUNDATION SUBRADE:

A SOILS INVESTIGATION HAS NOT BEEN PERFOMED ON THIS SITE. THE CONTRACTOR SHALL ENGAGE A GEOTECHNICAL ENGINEER TO VERIFY THAT THE FOUNDATION SUBGRADE IS SUITABLE TO SUPPORT THE STRUCTURE BASED ON THE ASSUMED BEARING PRESSURE. THE GEOTECH SHALL SUBMIT A REPORT TO THE ARCH / E.O.R. WITH HIS FINDINGS AND RECOMENDATIONS IF THE SUBGRADE IS FOUND TO BE UNACCEPTABLE.

ASSUMED ALLOWABLE NET BEARING PRESSURE _____ 1500 PSF

## DESIGN LOADS:

BUILDING CATEGORY_____ II

LIVE LOADS:

ROOF:

GROUND SNOW (Pg)_____ 30 PSF
FLAT ROOF SNOW (Pf)_____ 25 PSF
SNOW EXPOSURE (Ce) _____ 1.0
THERMAL FACTOR (Ct) _____ 1.1
RAIN ON SNOW @ SLOPES < 1/2:12_____ 5 PSF
UNBALANCED SNOW LOADS_____ASCE 7 SEC. 7.6

FLOOR:

TYPICAL _____ 125 PSF

WIND LOADS:

WIND SPEED _____115 MPH
EXPOSURE _____ C

SEISMIC LOADS:

SITE CLASSIFICATION _____ D
SEISMIC DESIGN CATEGORY _____ A
$S_S$ _____ .069
$S_1$ _____ .035

## MATERIALS

### CONCRETE

28 DAY CONCRETE STRENGTHS
FOOTINGS _____ 4000 PSI
SLAB ON GRADE_____ 3500 PSI
SUPPORTED SLABS AND _____ 4000 PSI
STOOPS _____ 4000 PSI
REINFORCING BARS_____ASTM A615 GRADE 60
WELDED BARS AND ANCHORS_____ASTM A706 GRADE 60
WELDED WIRE FABRIC_____ASTM A185, CSA G30.5

### STRUCTURAL

W SHAPES_____ ASTM A992
ROLLED SHAPES & PLATES_____ ASTM A36
TUBES _____ASTM A500 GRADE B
PIPES _____ ASTM A53 TYPE E OR S
WELDING ELECTRODES_____ E700XX
BOLTS _____ ASTM A325
ANCHOR RODS_____ ASTM F1554, GRADE 55
EXPANSION BOLTS _____ HILTI KWIK BOLT 3 OR APPROVED EQUIV.
ADHESIVE ANCHORS _____ HILTI HIT HY 150 MAX OR APPROVED EQUIV.
SCREW ANCHORS _____ SIMPSON TITEN HD OR HILTI HUS-H
SLEEVE ANCHORS _____ HILTI HLC OR APPROVED EQUIV.

FASTENERS IN CONTACT W/ TREATED LUMBER_____ 304 OR 316 STAINLESS,GALVANIZED ASTM F2329 OR A153 OR APPROVED EQUIV.

### METAL

FORM DECK (STRUCT STOOPS)_____1 1/2" TYPE "C" 20 GAGE, GALV

### STRUCTURAL LUMBER

LOAD BEARING & EXT WALLS_____STUD GRADE, #3 OR BETTER SPF
LINTELS, JOIST & PLATES _____ #2 OR BETTER HEM FIR OR SPF
LUMBER IN CONTACT W/ CONCRETE OR MASONRY ACQ TREATED FOR GROUND CONTACT #2 OR BETTER SOUTHERN PINE
M/C (MAX) _____ 19%
MICROLAM BEAMS_____ Fb = 3100 PSI Fv = 285 PSI E = 2000 PSI
OSB FLOOR SHEATHING_____3/4" T&G APA RATED STURD-I-FLOOR 24" SPAN RATING
OSB ROOF SHEATHING _____ 5/8" EXPOSURE 1 40/20
OSB WALL SHEATHING _____ 1/2" EXPOSURE 1 32/16
FASTENERS_____REFER TO GENERAL NOTES

### WOOD TRUSSES

FLOOR DESIGN LOADS
TOP CHORD DEAD LOAD _____ 10 PSF
BOTTOM CHORD DEAD LOAD_____ 5 PSF
TOP CHORD LIVE LOAD _____REFER TO DESIGN LOADS
BOTTOM CHORD LIVE LOAD _____ 0 PSF
MAX LIVE LOAD DEFLECTION _____ L/480

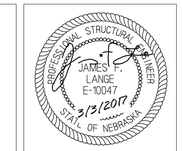


lange structural group
7230 Cornhusker Road
Lincoln, NE 68507
T: 402.421.0444 | F: 402.421.8780

Engineering International

SCHOOL BUS BARN
CHASE COUNTY, NEBRASKA

STRUCTURAL NOTES & DESIGN DATA

1/8" = 1'-0"

S-1.1

| MARK | WIDTH | DEPTH | REINFORCING |
|---|---|---|---|
| CF-1 | 1'-0 | 3'-4 | 2- #5 TOP & BOTTOM |
| CF-2 | 1'-8 | 1'-0 | 2- #5 BOTTOM |
| | | | |

CONTINUOUS FOOTING SCHEDULE

| MARK | PLAN | DEPTH | REINFORCING |
|---|---|---|---|
| F-1 | 3'-0 x 3'-0 | 3'-4 | 5- #5 EACH WAY, TOP & BOTTOM |
| F-2 | 4'-0 x 4'-0 | 3'-4 | 6- #5 EACH WAY, TOP & BOTTOM |
| F-3 | 5'-0 x 5'-0 | 3'-4 | 7- #5 EACH WAY, TOP & BOTTOM |

PAD FOOTING SCHEDULE

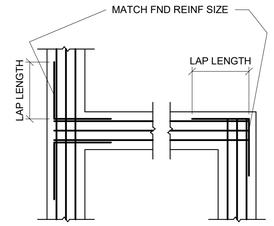


CORNER & INTERSECTION REINFORCING

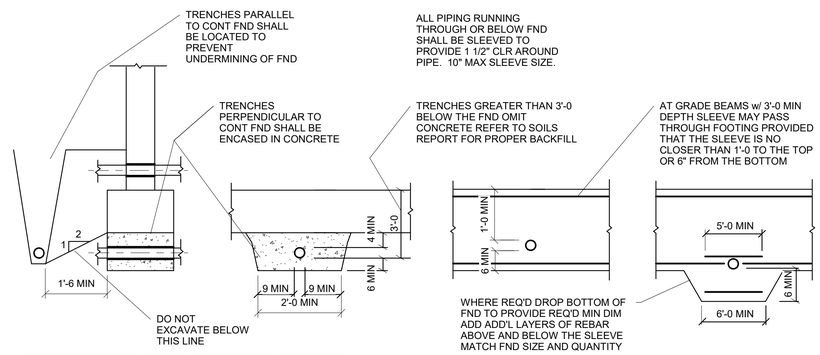


FOUNDATION DETAILS FOR UNDERGROUND PLUMBING

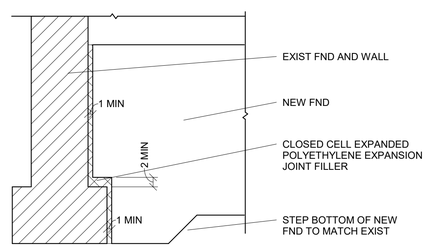


FOUNDATIONS ADJACENT TO EXIST STRUCTURES

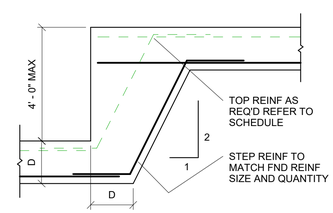


TYPICAL FOOTING STEP

## FOOTING SCHEDULE AND TYPICAL DETAILS

| MARK | TYPE | b (INCHES) | d (INCHES) | VERTICAL REINFORCING | x (INCHES) | TIE SIZE | TIE SPACING (INCHES) |
|---|---|---|---|---|---|---|---|
| P-1 | 2 | 12" | 18" | 2- #6 U-BARS | 13" | #3 | 3 @ 2.5" OC |
| P-2 | 4 | 12" | 18" | 2- #6 U-BARS | 13" | #3 | 3 @ 2.5" OC |
| | | | | | | | |

NOTES:

1. PROVICE 1 1/2" CLR SPACING FOR ALL TIES
2. CONTINUE WALL STEEL THRU ALL PILASTERS

U-BAR

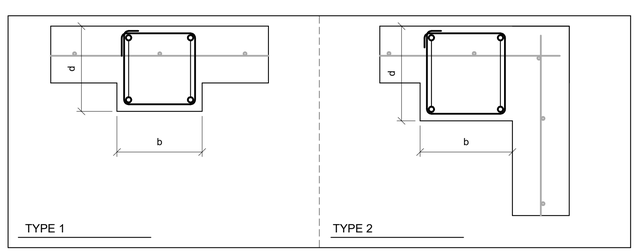


TYPE 1

TYPE 2

## PIER AND PILASTER SCHEDULE

| | NAILING SPACING | | | |
|---|---|---|---|---|
| LOCATION | SHEATHING | ROOF PERIMETER | PANEL EDGES | BLOCKING |
| FLOOR | 3/4" OSB | 6" OC | 6" OC | NOT REQ'D |
| | | | | |
| | | | | |

NOTES:

1. FASTENERS SHALL BE .131 x 2 1/2 P-NAILS
2. NAIL SHEATHING TO ALL INTERMEDIATE FRAMING @ 12" OC
3. PROVIDE 1/8" JOINT BETWEEN ALL PANELS FOR EXPANSION

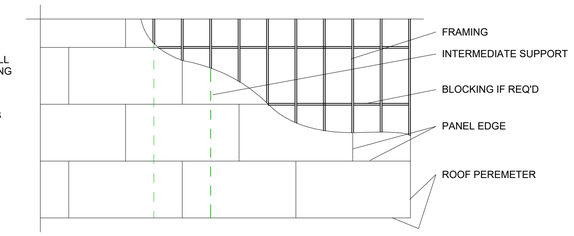


## FLOOR SHEATHING SCHEDULE

NUMBER OF 3/4" A325 BOLTS REQ'D PER BEAM CONNECTION

| BEAM | w8 | w10 | w12 | w14 | w16 | w18 | w21 | w24 | w27 | w30 | w33 | w36 |
|---|---|---|---|---|---|---|---|---|---|---|---|---|
| 2" COPE | 2 | 2 | 3 | 3 | 4 | 5 | 5 | 6 | 6 | 7 | 8 | 9 |
| 4 1/2" COPE | - | - | 2 | 2 | 3 | 4 | 5 | 6 | 6 | 7 | 8 | 9 |

NOTES:

1. ALL PRIMARY BEAM CONNECTIONS SHALL USE DBL ANGLE OR DBL PLATE CONNECTIONS

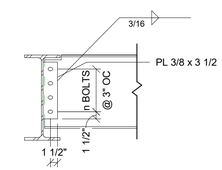


SINGLE PLATE CONNECTION (SP)

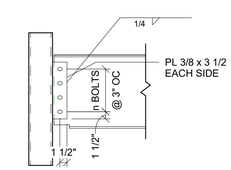


DOUBLE PLATE CONNECTION (DP)

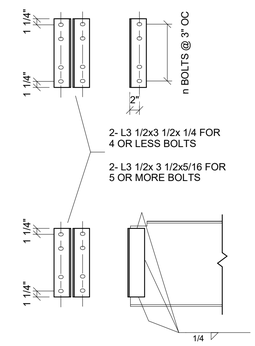


DOUBLE ANGLE CONNECTION (DA)

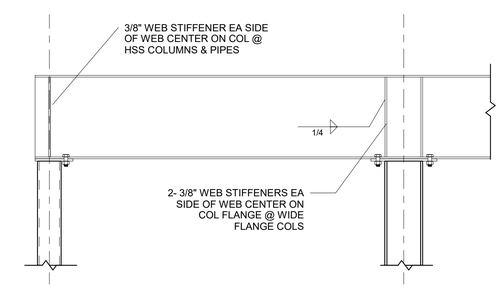


BEAM FRAMES OVER COLUMN

## BEAM CONNECTION SCHEDULE AND TYPICAL DETAILS

| OPENING WIDTH | HEADER | JACK STUDS | KING STUDS (EA SIDE) |
|---|---|---|---|
| L-1 | 4-2x8 | 2 | 1 |
| L-2 | 3-1.75x11.25 LVL | 3 | 1 |

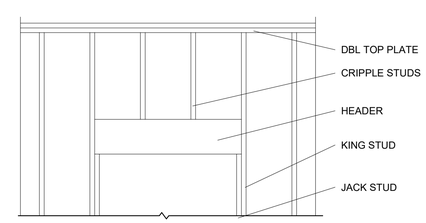


## TYPICAL WOOD OPENING SCHEDULE

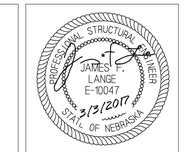


lange structural group

Engineering International

SCHOOL BUS BARN
CHASE COUNTY, NEBRASKA

STRUCTURAL SCHEDULES

AS INDICATED

S-1.2

UPPER SET OF GRID LINES ARE BASED ON THE OPTION 2 PEMB DESIGN

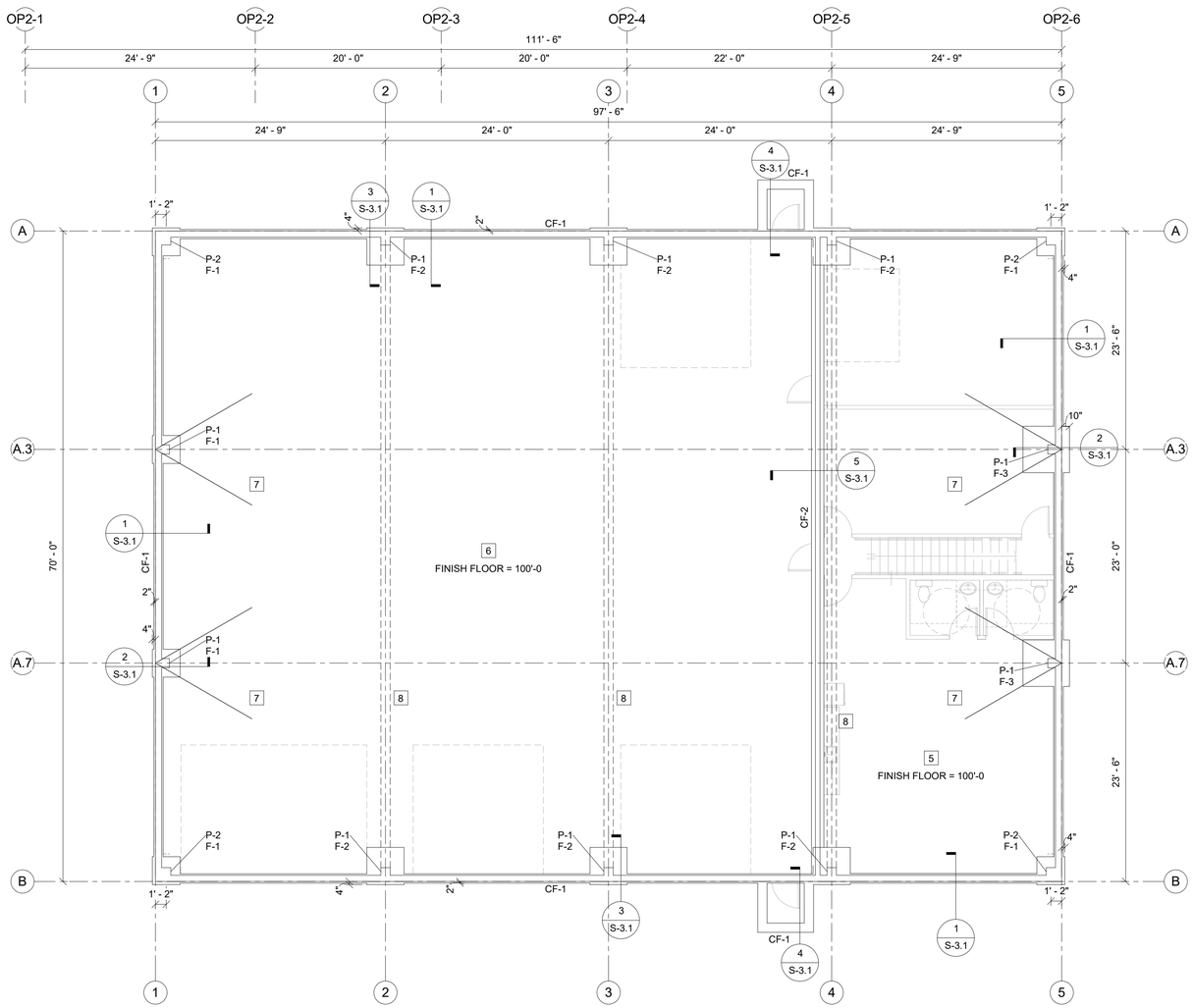


1 FOUNDATION PLAN
SCALE: 1/16" = 1'-0" [11"X17"]
1/8" = 1'-0" [22"X34"]

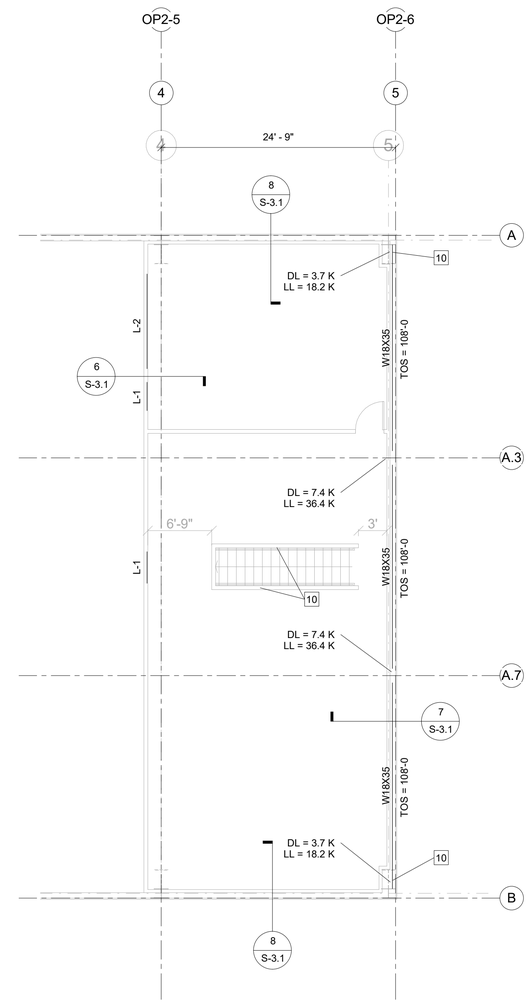


2 MEZZANINE FRAMING
SCALE: 1/16" = 1'-0" [11"X17"]
1/8" = 1'-0" [22"X34"]

NOTES

1. REFER TO DESIGN DATA, SCHEDULES & TYP DETAILS
2. # INDICATES SHEET NOTE REFER TO PLAN FOR LOCATION
3. TOF = 99'-4 UNLESS NOTED OTHERWISE
4. COLUMN SCHEDULE GUIDE
   C-1 COLUMN MARK
   BP-1 BASE PLATE MARK
   F-1 FOOTING MARK
   99'-4 TOP OF FOOTING

5. 4" CONCRETE ON PROPERLY PREPARED SUBGRADE REFER TO SOILS REPORT. REINFORCE w/ 6x6-w1.4xw1.4 WWF. REFER TO ARCH FOR VAPOR BARRIER.

6. 6" CONCRETE ON PROPERLY PREPARED SUBGRADE REFER TO SOILS REPORT. REINFORCE w/ #4 @ 16" OC EA WAY. REFER TO ARCH FOR VAPOR BARRIER.

7. #4x12'-0 LAP w/ V-BAR

8. 1'-4x8" THICKENED SLAB REINF w/ 2-#6 BOTTOM

9. TRUSS SUPPLIER TO PROVIDE MECHANICAL CHASE FOR DUCT WORK, COORDINATE WITH MECHANICAL

10. PEMB SUPPLIER TO PROVIDE OUTRIGGER TO SUPPORT MEZZANINE BEAM REFER TO PLAN FOR BEAM SIZE AND LOCATION

11. ATTACH STAIR STRINGER TO SIDE WALLS OF STAIRS w/ LEDGERLOCK SCREWS @ EA STUD

12. OPTION 2 GRIDS SHOWN ABOVE OPTION 1 DRAWING, FOR OPTION 2 SHIFT GRIDLINE 1 OUT TO OP2-1, COPY GRIDLINE 2 TO OP2-2 AND ADJUST REMAINING GRIDLINES TO MATCH OPTION 2 REMAINING GRIDLINES

METAL BUILDING
ANCHOR BOLT SCHEDULE

| SIZE | EMBED INTO FND |
|---|---|
| 1/2" | 15" |
| 5/8" | 15" |
| 3/4" | 18" |
| 7/8" | 21" |
| 1" | 24" |

ANCHOR BOLTS SHALL BE ASTM F1554, GRADE 55 STRAIGHT THREADED ROD w/ NUT TACK WELDED TO EMBED END

PROFESSIONAL STRUCTURAL ENGINEER
JAMES F. LANGE
E-10047
3/13/2017
STATE OF NEBRASKA

lange structural group
7225 Cornhusker Road
Lincoln, NE 68505
T: 402.420.0484 | F: 402.421.8186

Engineering International

SCHOOL BUS BARN
CHASE COUNTY, NEBRASKA

FOUNDATION & MEZZANINE PLAN

AS INDICATED

S-2.1

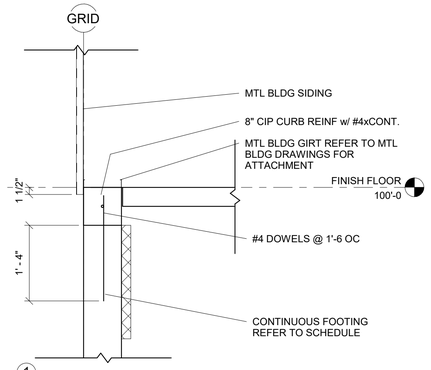


1 SCALE: 3/8" = 1'-0" [11"X17"]
3/4" = 1'-0" [22"X34"]

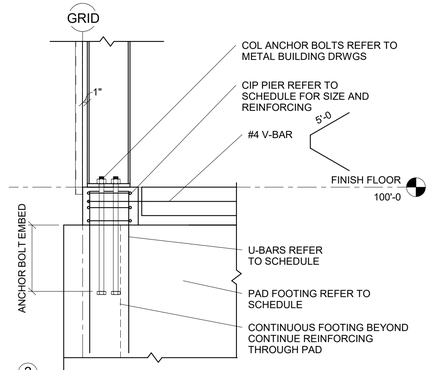


2 SCALE: 3/8" = 1'-0" [11"X17"]
3/4" = 1'-0" [22"X34"]

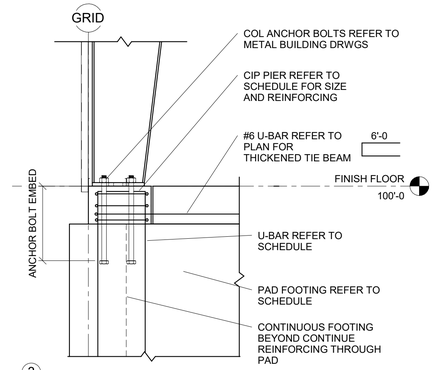


3 SCALE: 3/8" = 1'-0" [11"X17"]
3/4" = 1'-0" [22"X34"]

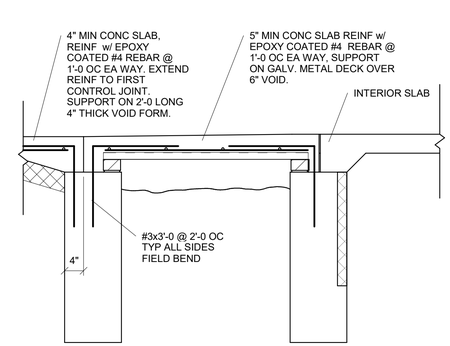


4 SCALE: 3/8" = 1'-0" [11"X17"]
3/4" = 1'-0" [22"X34"]

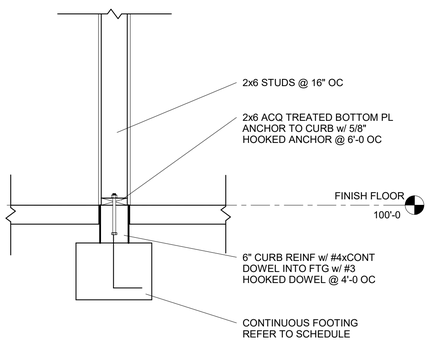


5 SCALE: 3/8" = 1'-0" [11"X17"]
3/4" = 1'-0" [22"X34"]

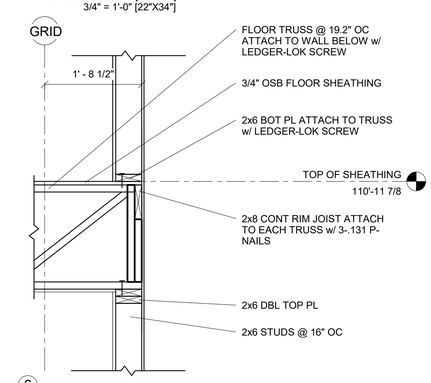


6 SCALE: 3/8" = 1'-0" [11"X17"]
3/4" = 1'-0" [22"X34"]

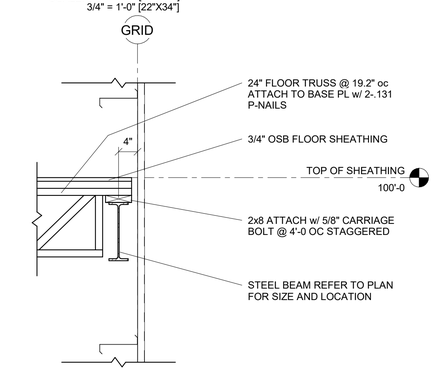


7 SCALE: 3/8" = 1'-0" [11"X17"]
3/4" = 1'-0" [22"X34"]

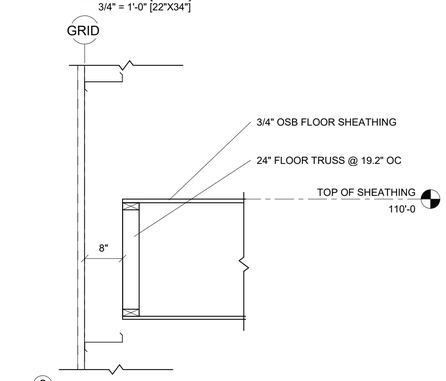


8 SCALE: 3/8" = 1'-0" [11"X17"]
3/4" = 1'-0" [22"X34"]

PROFESSIONAL STRUCTURAL ENGINEER
JAMES F. LANGE
E-10047
3/31/2017
STATE OF NEBRASKA

lange structural group
7230 Cornhusker Road
Lincoln, NE 68507
T: 402.420.0444 | F: 402.421.8780

Engineering International

SCHOOL BUS BARN
CHASE COUNTY, NEBRASKA

DETAILS

3/4" = 1'-0"

S-3.1

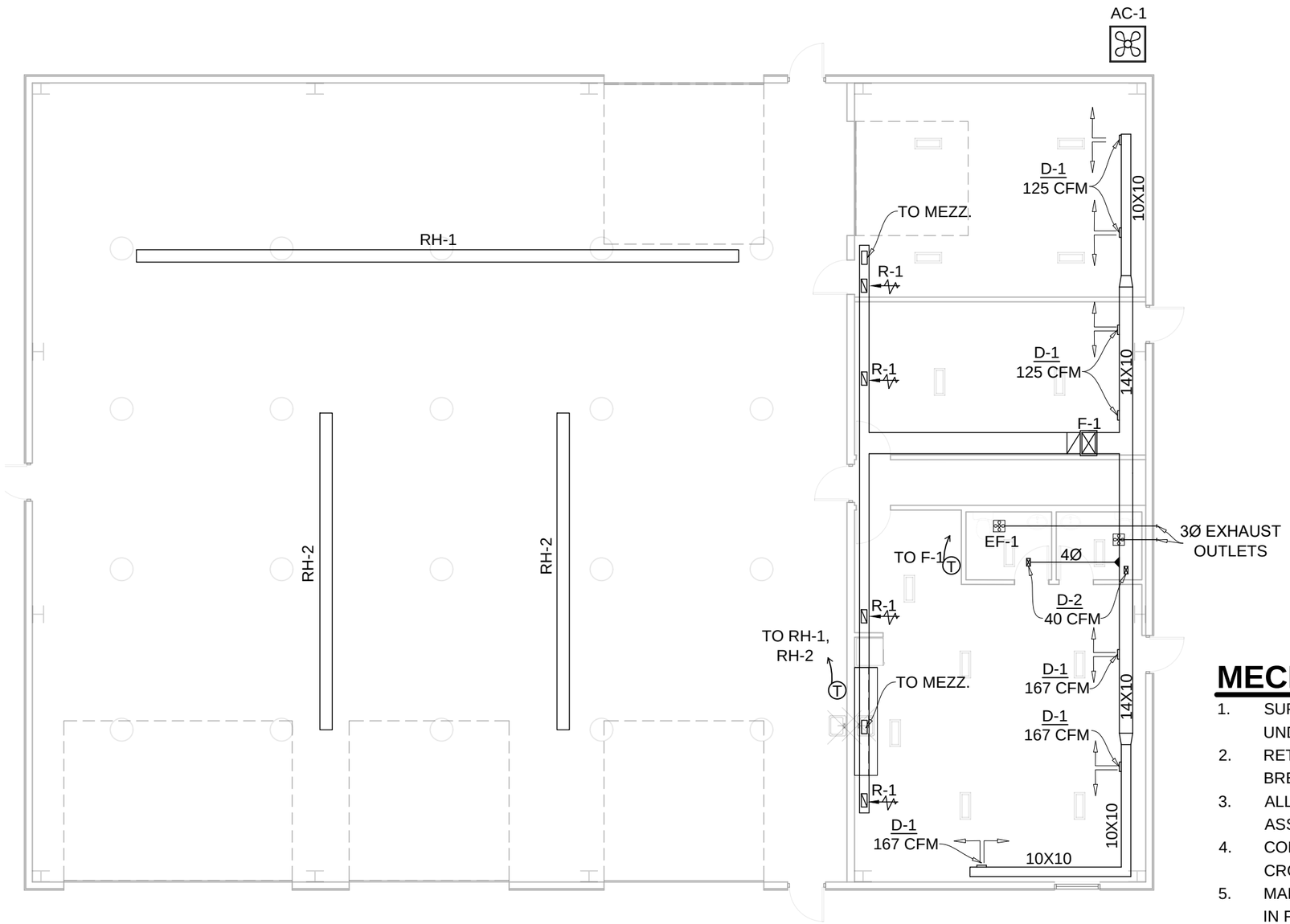


## LEGEND

| FIXT. | DESCRIPTION |
|---|---|
| T | THERMOSTAT |
| | FURNACE F-1 |
| | AC UNIT AC-1 |
| | EXHAUST FAN EF-1 |
| | RETURN GRILLE |
| | SUPPLY DIFFUSER |

## MECHANICAL GENERAL NOTES:

1. SUPPLY DUCTWORK IS LOCATED ON EAST SIDE OF BUILDING, UNDER CEILING SHEET ROCK
2. RETURN DUCT IS LOCATED ON WEST SIDE OF BREAK/STORAGE/MECH ROOMS, UNDER CEILING SHEET ROCK
3. ALL PENETRATIONS THROUGH RATED WALL AND CEILING ASSEMBLIES NEED TO HAVE FIRE DAMPERS
4. CONTRACTOR MAY RESIZE DUCTWORK PROVIDED THE CROSS-SECTIONAL AREA IS NOT REDUCED
5. MAINTAIN LESS THAN 500 FPM IN BRANCH DUCTS AND 750 FPM IN PLENUMS
6. DUCTED UNITS SHALL HAVE A MINIMUM OF 30" OF LINED DUCT AT BOTH THE DISCHARGE AND SUCTION SIDE (8"X34" TYP.)
7. PROVIDE MANUAL BALANCING DAMPER ON ALL BRANCH DUCTS

1 **MECH. FLOOR PLAN**

SCALE: 3/32" = 1'-0" [11"X17"]
3/16" = 1'-0" [22"X34"]

NORTH

REVIEW SET
NOT FOR
CONSTRUCTION

Engineering International
(308) 340-5963
P.O.Box 401
402 Norris Avenue, Suite 107
McCook NE 69001-0401

NEW (99' X 70') SCHOOL BUS BARN
CHASE COUNTY SCHOOLS
IMPERIAL, NEBRASKA

MECH. FLOOR PLAN

DATE 3.23.2017

SCALE 3/32"=1'-0"

M1.0

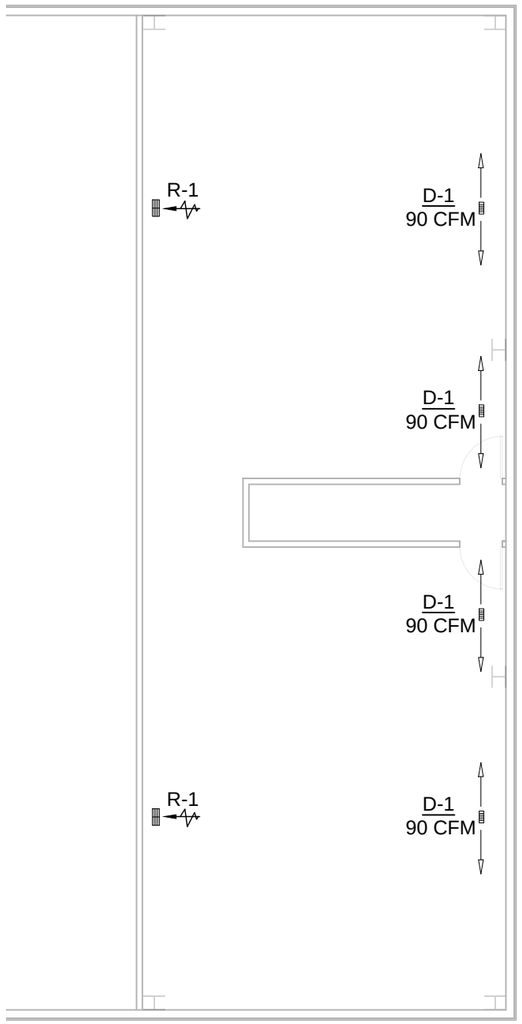


# MECHANICAL GENERAL NOTE

1. SUPPLY DUCTWORK IS LOCATED ON EAST SIDE OF BUILDING, UNDER CEILING SHEET ROCK
2. RETURN DUCT IS LOCATED ON WEST SIDE OF BREAK/STORAGE/MECH ROOMS, UNDER CEILING SHEET ROCK
3. ALL PENETRATIONS THROUGH RATED WALL AND CEILING ASSEMBLIES NEED TO HAVE FIRE DAMPERS
4. CONTRACTOR MAY RESIZE DUCTWORK PROVIDED THE CROSS-SECTIONAL AREA IS NOT REDUCED
5. MAINTAIN LESS THAN 500 FPM IN BRANCH DUCTS AND 750 FPM IN PLENUMS
6. DUCTED UNITS SHALL HAVE A MINIMUM OF 30" OF LINED DUCT AT BOTH THE DISCHARGE AND SUCTION SIDE (8"X34" TYP.)
7. PROVIDE MANUAL BALANCING DAMPER ON ALL BRANCH DUCTS

## LEGEND

| FIXT. | DESCRIPTION |
|---|---|
| T | THERMOSTAT |
| | FURNACE F-1 |
| | AC UNIT AC-1 |
| | EXHAUST FAN EF-1 |
| | RETURN GRILLE |
| | SUPPLY DIFFUSER |

1 **MECH. FLOOR PLAN**

SCALE: 3/32" = 1'-0" [11"X17"]
3/16" = 1'-0" [22"X34"]

NORTH

REVIEW SET
NOT FOR
CONSTRUCTION

Engineering International
(308) 340-5963
P.O Box 401
402 Norris Ave Ste 107
McCook NE 69001-0401

NEW (99' X 70') SCHOOL BUS BARN
CHASE COUNTY SCHOOLS
IMPERIAL, NEBRASKA

MECH. MEZZ.PLAN

DATE 3.23.2017

SCALE 3/32"=1'-0"

M1.1

## DIFFUSER / REGISTER SCHEDULE

| DESIGNATION | MANUFACTURER | MODEL # | MOUNT | COLOR | QUANT. | SIZE | REMARKS |
|---|---|---|---|---|---|---|---|
| D-1 | AMERICAN METAL | 456B4X8 | FL/CLG | WH | 2 | 4X8 | |
| D-2 | AMERICAN METAL | 413W4X10 | FL/CLG | WH | 11 | 4X10 | |
| R-1 | AMERICAN METAL | 375W14X6 | FL/CLG | WH | 6 | 14X6 | |

## MECHANICAL SCHEDULE

| DESIGNATION | MANUFACTURER | MODEL # | SUPPLY REQ. | REMARKS |
|---|---|---|---|---|
| F-1 | GOODMAN | GMVC960803BN, OR APPROVED EQUAL | 7.8 A, 1/2HP MOTOR | 2 TON, 96 AFUE, BLOWER @ 1000 CFM MEDIUM, 80 MBH, FILTER SIZE: 16X25 |
| AC-1 | GOODMAN | GSX140241, OR APPROVED EQUAL | 208/230V-1PH-60Hz | GOODMAN COIL#CAPF3636B6, 2 TON, FUELESS DISCONNECT, CONDENSING UNIT R410A, LIQUID LINE: $\frac{3}{8}$", SUCTION LINE: $\frac{3}{4}$", 14 SEER |
| RH-1 | SPACE RAY | LTS 180-50 N5, OR APPROVED EQUAL | $\frac{1}{2}$" GAS INLET | 180 MBH |
| RH-2 | SPACERAY | LTS 50 25 N5, OR APPROVED EQUAL | $\frac{1}{2}$" GAS INLET | 50 MBH EACH |
| EF-1 | BROAN | 670 CEILING/WALL FANS, OR APPROVED EQUAL | 120V | PROVIDE WITH OUTSIDE LOUVER, 3.4 S.P SONES, 41 CFM @.375 Ps |
| LFT-1 | -- | -- | -- | LIFT PROVIDED BY OWNERS |
| PW-1 | -- | -- | -- | POWER WASHER PROVIDED BY OWNERS |

REVIEW SET
NOT FOR
CONSTRUCTION

Engineering International
(308) 340-5963
P.O Box 401
402 Norris Avenue, Suite 107
McCook NE 69001-0401

NEW (99' X 70') SCHOOL BUS BARN
CHASE COUNTY SCHOOLS
IMPERIAL, NEBRASKA

MECHANICAL SCHEDULES

DATE 3.23.2017

SCALE 3/32"=1'-0"

M1.2

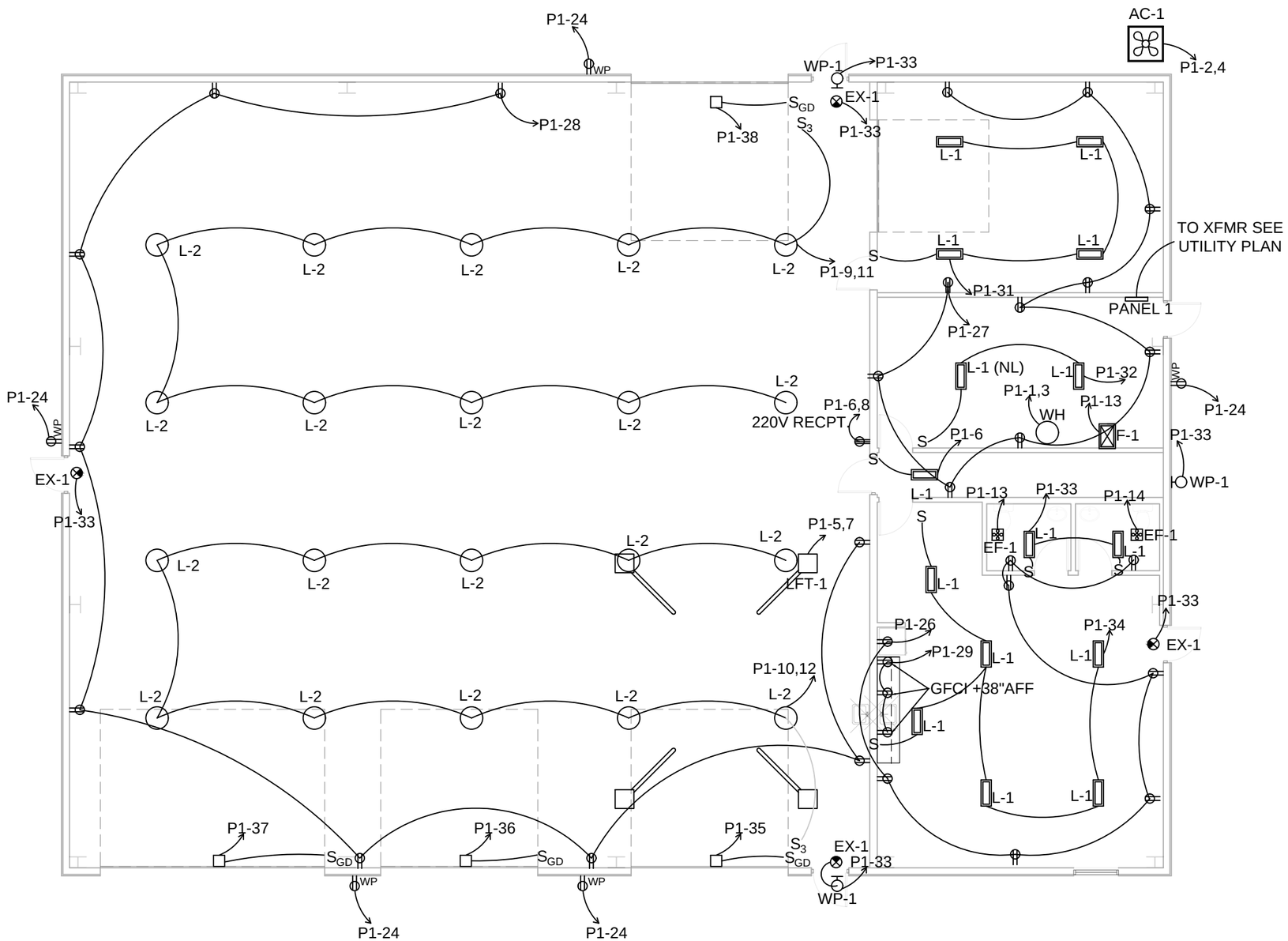


# LEGEND

| FIXT. | DESCRIPTION |
|---|---|
| | LIGHTING FIXTURE L-1 |
| T | THERMOSTAT |
| | EMERGENCY / EXIT LIGHT EX-1 |
| | WALL PAC OUTSIDE LIGHTING WP-1 |
| | LIGHTING FIXTURE L-2 |
| | ELECTRICAL PANEL P-1 |
| S | SWITCH |
| S3 | THREE WAY SWITCH |
| SGD | GARAGE DOOR SWITCH |
| | DUPLEX RECEPTACLE |
| WP | WATER PROOF RECEPTACLE |
| | 220V RECEPTACLE FOR WELDER |
| | BUS LIFT ARM |

1 **ELECTRICAL FLOOR PLAN**

SCALE: 3/32" = 1'-0" [11"X17"]
3/16" = 1'-0" [22"X34"]

NORTH

REVIEW SET
NOT FOR
CONSTRUCTION


Engineering International
(308) 340-5943
P.O. Box 401
402 Norris Avenue
McCook NE 69001-0401


NEW (99' X 70') SCHOOL BUS BARN
CHASE COUNTY SCHOOLS
IMPERIAL, NEBRASKA

ELECTRICAL PLAN

DATE 3.23.2017

SCALE 3/32"=1'-0"

E1.0

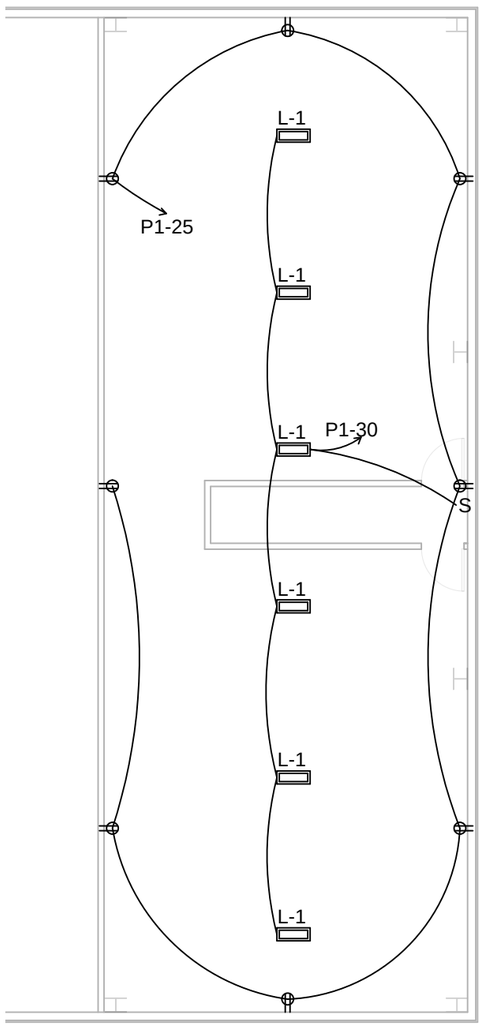


1 **ELECTRICAL MEZZ. PLAN**

SCALE: 3/32" = 1'-0" [11"X17"]
3/16" = 1'-0" [22"X34"]

NORTH

## LEGEND

| FIXT. | DESCRIPTION |
|---|---|
| | LIGHTING FIXTURE L-1 |
| T | THERMOSTAT |
| | EMERGENCY / EXIT LIGHT EX-1 |
| | WALL PAC OUTSIDE LIGHTING WP-1 |
| | LIGHTING FIXTURE L-2 |
| | ELECTRICAL PANEL P-1 |
| S | SWITCH |
| S3 | THREE WAY SWITCH |
| SGD | GARAGE DOOR SWITCH |
| | DUPLEX RECEPTACLE |
| WP | WATER PROOF RECEPTACLE |
| | 220V RECEPTACLE FOR WELDER |
| | BUS LIFT ARM |

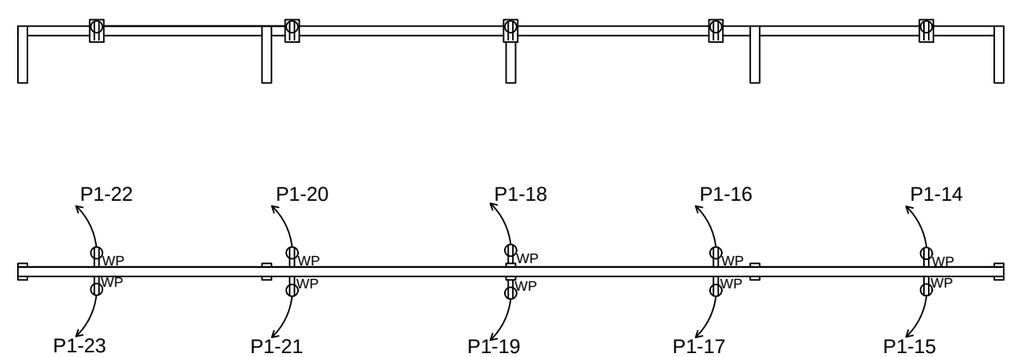


1 **BUS RECEPTACLE PLAN**

SCALE: 3/32" = 1'-0" [11"X17"]
3/16" = 1'-0" [22"X34"]

NORTH

REVIEW SET
NOT FOR
CONSTRUCTION


engineering International
(308) 340-5943
P.O. Box 401
402 North Avenue, Ste 107
McCook NE 69001-0401


NEW (99' X 70') SCHOOL BUS BARN
CHASE COUNTY SCHOOLS
IMPERIAL, NEBRASKA

ELECTRICAL
MEZZ. PLAN

DATE 3.23.2017

SCALE 3/32"=1'-0"

E1.1

# PANEL 1

| DESCRIPTION (QUANTITY) | BRK | PHASE | | | BRK | DESCRIPTION (QUANTITY) |
|---|---|---|---|---|---|---|
| WATER HEATER-1 | 50 | 1 | A | 2 | 25 | AC UNIT-1 |
| | | 3 | B | 4 | | |
| LIFT LFT-1<br>(VERIFY WITH MANUFACTURER) | 50 | 5 | A | 6 | 40 | WELDER |
| | | 7 | B | 8 | | |
| BUS BARN LIGHTS (10) | 20 | 9 | A | 10 | 20 | BUS BARN LIGHTS (10) |
| | | 11 | B | 12 | | |
| FURNACE | 15 | 13 | A | 14 | 20 | OUTSIDE BUS RECPT. |
| OUTSIDE BUS RECPT. | 20 | 15 | B | 16 | 20 | OUTSIDE BUS RECPT. |
| OUTSIDE BUS RECPT. | 20 | 17 | A | 18 | 20 | OUTSIDE BUS RECPT. |
| OUTSIDE BUS RECPT. | 20 | 19 | B | 20 | 20 | OUTSIDE BUS RECPT. |
| OUTSIDE BUS RECPT. | 20 | 21 | A | 22 | 20 | OUTSIDE BUS RECPT. |
| OUTSIDE BUS RECPT. | 20 | 23 | B | 24 | 20 | OUTSIDE RECPT./EF-1 (7) |
| MEZZ. RECPT. (10) | 20 | 25 | A | 26 | 20 | BREAK/BATHROOM RECPT. (9) |
| MECH. STORAGE RM RECPT. (10) | 20 | 27 | B | 28 | 20 | BARN RECPT. (29) |
| COUNTER RECPT. (3) | 20 | 29 | A | 30 | 20 | MEZZ. LIGHTS (4) |
| STORAGE LIGHTS & WP-1 (5) | 20 | 31 | B | 32 | 20 | MECH.RM/STAIR LIGHTS (4) |
| BATHROOM LIGHTS & WP-1 (4) | 20 | 33 | A | 34 | 20 | BREAK ROOM LIGHTS (6) |
| GARAGE DOOR OPENER | 20 | 35 | B | 36 | 20 | GARAGE DOOR OPENER |
| GARAGE DOOR OPENER | 20 | 37 | A | 38 | 20 | GARAGE DOOR OPENER |
| | | 39 | B | 40 | | |
| | | 41 | A | 42 | | |

# LIGHTING SCHEDULE

| DESIGNATION | MANUFACTURER | MODEL # | MOUNT | QUANT. | SIZE | WATTS | REMARKS |
|---|---|---|---|---|---|---|---|
| L-1 | GENERAL ELECTRIC | S2NOA3SWHTE, OR APPROVED EQUAL | SURFACE | 32 | 7"X24" | 30-72W | LED, PROVIDE OCCUPANCY SENORS |
| L-2 | ALBEO | A44H80581BV23BDW, OR APPROVED EQUAL | SURFACE | 20 | $29\frac{1}{2}$"L, $21\frac{1}{3}$"W, $5\frac{1}{4}$"D | -- | 30,000, WITH MOTION SENSOR |
| WP-1 | E-CONO LIGHT | E-WP9LO9CZ, OR APPROVED EQUAL | WALL | 3 | 18"L, $9\frac{3}{8}$"W, $9\frac{3}{4}$"D | 96W | LED, PROVIDE ELECTRICAL SENSORS |
| EX-1 | E-CONO LIGHT | E-XPL2RBW, OR APPROVED EQUAL | CLG | 3 | $7\frac{1}{8}$"H, $11\frac{5}{8}$"W, $1\frac{5}{8}$"D | 0.8W | LED |

REVIEW SET
NOT FOR
CONSTRUCTION

Engineering International
(308) 340-5963
P.O. Box 401
402 Norris Avenue, Suite 107
McCook NE 69001-0401

NEW (99' X 70') SCHOOL BUS BARN
CHASE COUNTY SCHOOLS
IMPERIAL, NEBRASKA

ELECTRICAL
SCHEDULES

DATE 3.23.2017

SCALE 1/4"=1'-0"

E1.2

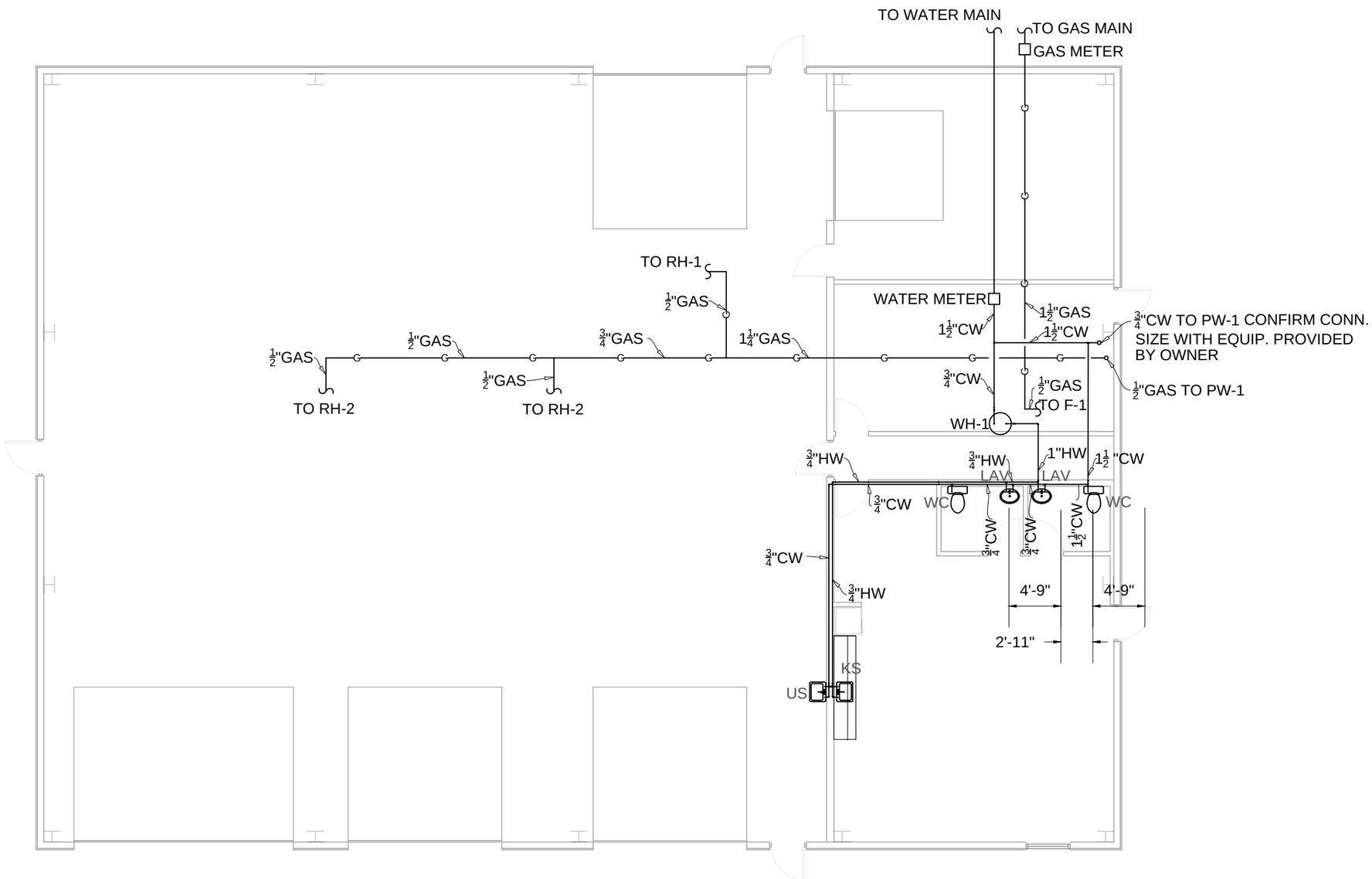


## LEGEND

| FIXT. | DESCRIPTION |
|---|---|
| | LAVATORY LAV |
| | TOILET WC |
| | UTILITY SINK US |
| | KITCHEN SINK KS |
| | WATER HEATER WH |
| | WASH DRAIN WD (SEE GRADING PLAN) |

1 **SUPPLY PLUMBING FLOOR PLAN**

SCALE: 3/32" = 1'-0" [11"X17"]
3/16" = 1'-0" [22"X34"]

NORTH

REVIEW SET
NOT FOR
CONSTRUCTION

Engineering International
(308) 340-5943
P.O.Box 401
402 North Adams Ave
McCook NE 69001-0401

NEW (99' X 70') SCHOOL BUS BARN
CHASE COUNTY SCHOOLS
IMPERIAL, NEBRASKA

WATER
PLUMBING PLANS

DATE 3.23.2017

SCALE 3/32"=1'-0"

P1.0

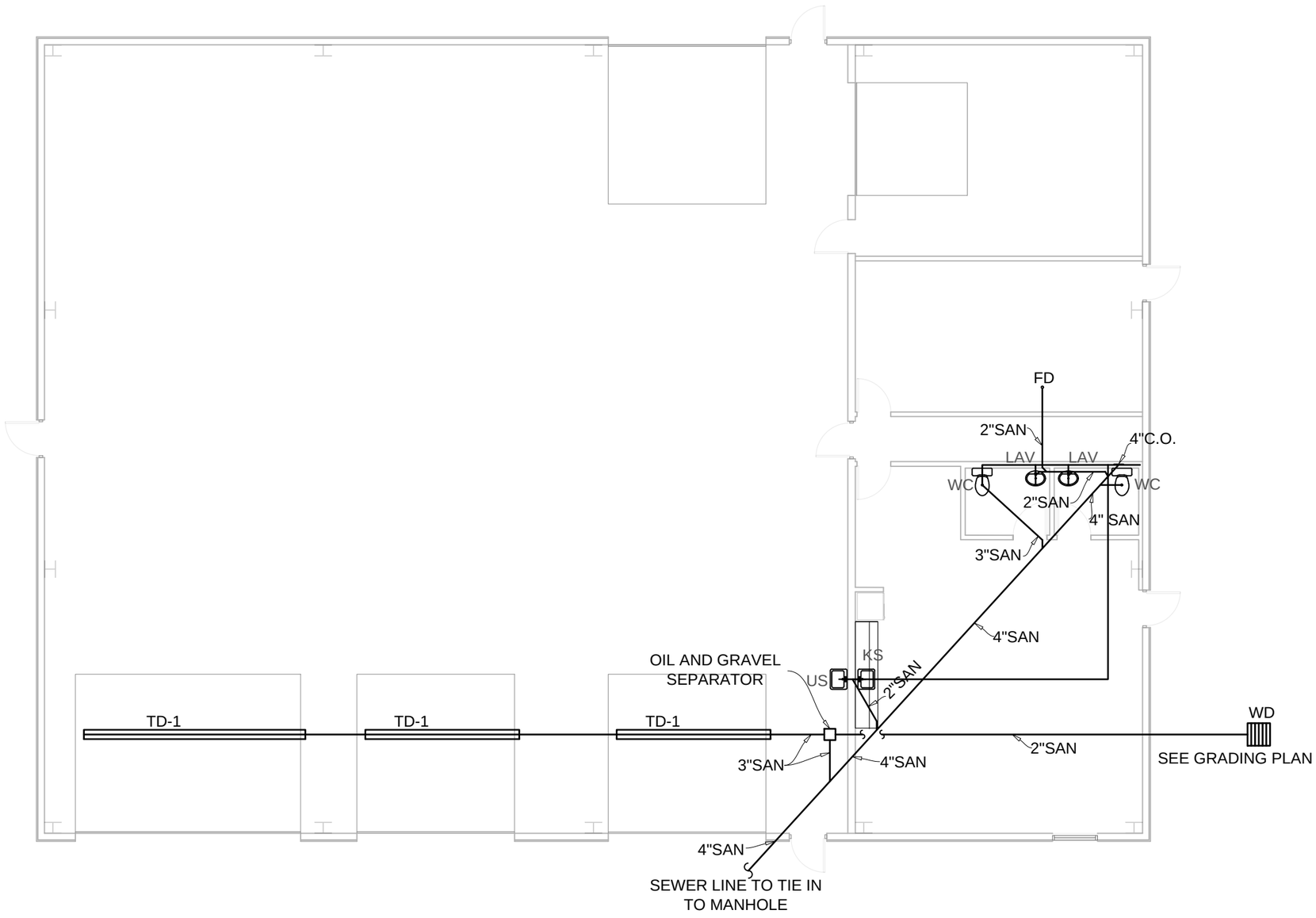


## LEGEND

| FIXT. | DESCRIPTION |
|---|---|
| | LAVATORY LAV |
| | TOILET WC |
| | UTILITY SINK US |
| | KITCHEN SINK KS |
| | WATER HEATER WH |
| | WASH DRAIN WD (SEE GRADING PLAN) |
| | VENT PIPING |

1 **WASTE PLUMBING FLOOR PLAN**

SCALE: 3/32" = 1'-0" [11"X17"]
3/16" = 1'-0" [22"X34"]

NORTH

REVIEW SET
NOT FOR
CONSTRUCTION

Engineering International
(308) 340-5963
P.O.Box 401
402 Norris Avenue, Ste 107
McCook NE 69001-0401

NEW (99' X 70') SCHOOL BUS BARN
CHASE COUNTY SCHOOLS
IMPERIAL, NEBRASKA

WASTE PLUMBING PLANS

DATE 3.23.2017

SCALE 3/32"=1'-0"

P1.0

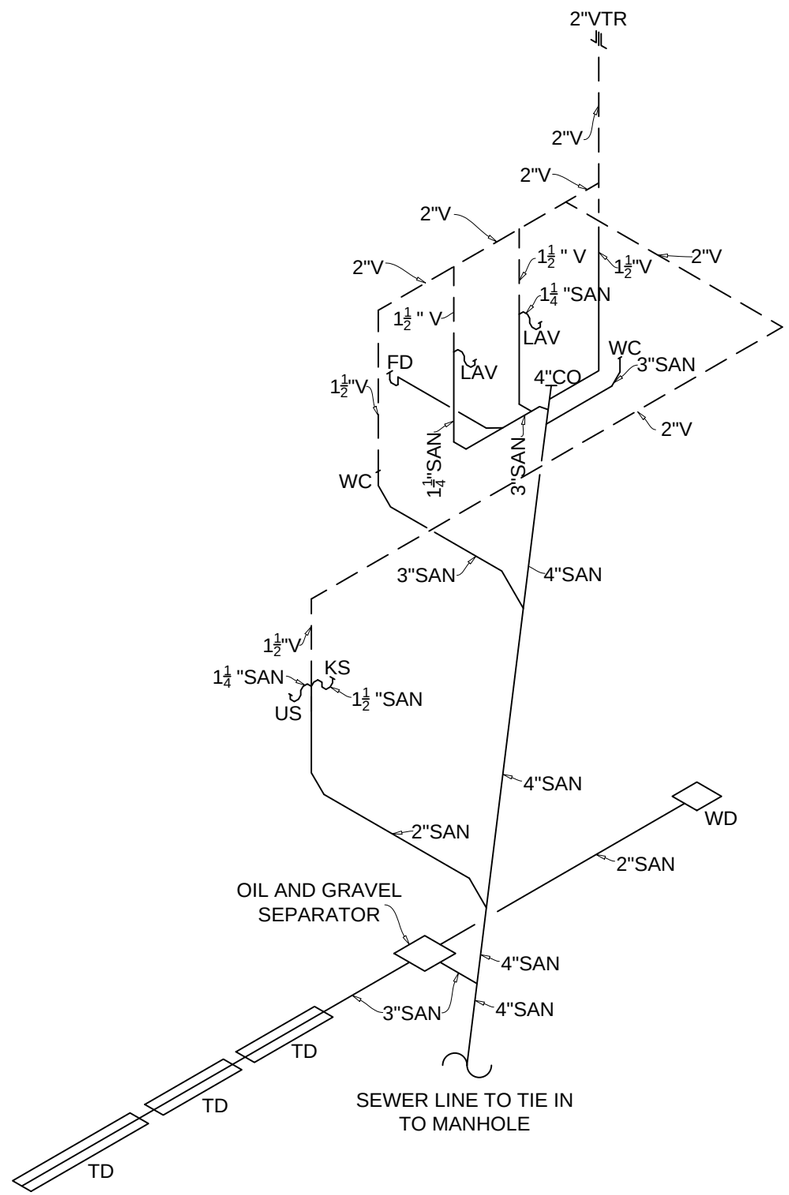


1 **RISER DIAGRAM**

SCALE: NTS

**REVIEW SET**
**NOT FOR**
**CONSTRUCTION**


engineering
International
(308) 340-5963
P.O.Box 401
402 Norris Avenue, Ste 107
McCook NE 69001-0401


**NEW (99' X 70') SCHOOL BUS BARN**
CHASE COUNTY SCHOOLS
**IMPERIAL, NEBRASKA**

RISER DIAGRAM

DATE 3.23.2017

SCALE 3/32"=1'-0"

P1.2

# PLUMBING SCHEDULE

| DESIGNATION | MANUFACTURER | MODEL # | MOUNT | MATERIAL | REMARKS |
|---|---|---|---|---|---|
| WH-1 | RHEEM | XE10P06PU20U0 | FLOOR | -- | 10 GALLON CAPACITY, 2000 W |
| FD-1 | ZURN | GR-FR05NI-C2N-PS-CC | -- | CAST IRON | 2" PIPE DIAMETER |
| WC-1 | AMERICAN STANDARD | 2467.100 | FLOOR | VITREOUS CHINA | ADA, TANK TYPE, PROVIDE WITH AMERICAN STANDARD MODEL# 5218.210 SEAT |
| LAV-1 | AMERICAN STANDARD | 0356.041.020 | WALL | VITREOUS CHINA | FAUCET/HANDLE MODEL# 23577003 BY GROHE, DRAIN MODEL# 9295-CP BY DECOLAV |
| KS-1 | ELKAY | LR2219C | LAY IN | STAINLESS STEEL | FAUCET/HANDLE MODEL# LK406GN04T4C, DRAIN MODEL# LK500, BOTH ELKAY BRAND |
| US-1 | ELKAY | ESSB2520C | WALL | STAINLESS STEEL | FAUCET/HANDLE MODEL# LK907BR03L2H, DRAIN MODEL# LK173, BOTH ELKAY BRAND, U LINE FAUCET MOUNT EYE WASH STATION MODEL# H-5100 |
| TD-1 | ACO | S200K-SK200 68041 | -- | -- | GRATE MODEL# EN1433 |

REVIEW SET
NOT FOR
CONSTRUCTION

Engineering International
(308) 340-5963
P.O. Box 401
402 North Ave, Suite #107
McCook NE 69001-0401

NEW (99' X 70') SCHOOL BUS BARN
CHASE COUNTY SCHOOLS
IMPERIAL, NEBRASKA

PLUMBING SCHEDULE

DATE 3.23.2017

SCALE 1/4"=1'-0"

P1.3

| | | | | | | | |
|---|---|---|---|---|---|---|---|
| Roof leaks, north wall under furnace, north east wall over used oil, between north bay and second north bay, between west bay and center bay, in wash /bathroom area, pass-through and both walls rotted on bottom and hole in south side. | $31,000 | | | | | | |
| Wash area sink slow to drain, faucet leaks, hot water heater not working, ladies toilet leaks around bottom, men's will not flush, men's urinal not working and have to fill with water to keep sewer gasses out. | ? | | | | | | |
| Replacement of doors, locks, closers. | $24,000 | | | | | | |
| Water fountain broken. | $1,000 | | | | | | |
| No place to dump mop bucket or cleaning supplies. | $2,000 | | | | | | |
| Office area needs remodeling and improvements and storage area. | $27,000 | | | | | | |
| Doors not placed correctly to get buses in and out. Add doors to the east side of building. | $14,000 | | | | | | |
| No security lights. | $3,000 | | | | | | |
| Wash area for buses. | $8,500 | | | | | | |
| Electrical over loaded keeps tripping breakers when using lift grinder or cut off wheel . | $2,000 | | | | | | |
| Pit needs to be filled in-safety hazard. | $1,000 | | | | | | |
| Lighting- some not working and not very bright or well placed for how we are using the building. | $22,000 | | | | | | |
| Install shower/rinse/eye wash area. | $2,000 | | | | | | |
| Repaint exterior and repair. | $8,000 | | | | | | |
| Exit signs need to be installed and/or redone. | $500 | | | | | | |
| Sprinkler system | $45,000 | | | | | | |
| Mold inspection | ? | | | | | | |
| Asbestos testing | ? | | | | | | |
| New windows in office area. | $8,000 | | | | | | |
| Cost of splitting meter | $200 | | | | | | |
| HVAC concerns for both areas | $7,000 | | | | | | |
| Concrete/ Approaches need to be improved, redone/ All concrete redone | $65,000 | | | | | | |
| Hot water heater | $2,000 | | | | | | |
| Bathroom ADA compliance | $5,000 | | | | | | |
| Improvements for storage and racks | $5,000 | | | | | | |
| Tech wiring and updates | $3,000 | | | | | | |
| Redo steps and add handrailing on north side of building | $600 | | | | | | |
| Resheeting east side of building | $5,000 | | | | | | |
| 10% Contingency | $29,000 | | | | | | |
| Total | $320,800 | | | | | | |
| | | | | | | | |
| | | | | | | | |
| | | | | | | | |
| Concerns | | | | | | | |
| Cannot install lift | | | | | | | |
| Possible building demolition | $50,000 | | | | | | |
| Rent/Lease | ? | | | | | | |
| The unknown-Plumbing, interior concrete, abatement, grandfathered code. | | | | | | | |
| | | | | | | | |
| | | | | | | | |
| The cost of waiting | Year | Original Cost | Increase/yr 10% | Total | | Increase/yr 5% | Total |
| | Now | $565,850 | | | $565,850 | | |
| | Year 1 | $565,850 | 56,585 | $622,435 | $565,850 | $28,292.50 | $594,142.50 |
| | Year 2 | $622,435 | $62,243.50 | $684,678.50 | $594,142.50 | 29,707.13 | $623,849.63 |
| | Year 3 | $684,678.50 | $68,476.85 | $753,146.35 | $623,849.63 | $31,192.48 | $655,042.11 |
| | Year 4 | $753,146.35 | $75,314.64 | $828,460.99 | $655,042.11 | $32,752.11 | $687,794.22 |
| | Year 5 | $828,460.99 | $82,846.10 | $911,307.09 | $687,794.22 | $34,389.71 | $722,183.93 |
| | Year 6 | $911,307.09 | $91,130.71 | $1,002,437.80 | $722,183.93 | $36,109.20 | $758,293.13 |

| | | | | | | | |
|---|---|---|---|---|---|---|---|
| | Year 7 | $1,002,437.80 | $100,243.78 | $1,102,681.58 | $758,293.13 | $37,914.66 | $796,207.79 |
| | Year 8 | $1,102,681.58 | $110,268.16 | $1,212,949.74 | $796,207.79 | $39,810.39 | $836,018.18 |
| | Year 9 | $1,212,949.74 | $121,294.97 | $1,334,244.71 | $836,018.18 | $41,800.91 | $877,819.09 |
| | Year 10 | $1,334,244.71 | $133,424.47 | $1,467,669.18 | $877,819.09 | $43,890.95 | $921,710.04 |
| | Year 11 | $1,467,669.18 | $146,766.92 | $1,614,436.10 | $921,710.04 | $46,085.50 | $967,795.54 |
| | Year 12 | $1,614,436.10 | $161,443.61 | $1,775,879.71 | $967,795.54 | $48,389.78 | $1,016,185.32 |
| | Year 13 | $1,775,879.71 | $177,587.97 | $1,953,466.97 | $1,016,185.32 | $50,809.27 | $1,066,994.59 |
| | Year 14 | $1,953,466.97 | $195,346.70 | $2,148,813.67 | $1,066,994.59 | $53,349.73 | $1,120,344.32 |
| | Year 15 | $2,148,813.67 | $214,881.37 | $2,363,695.04 | $1,120,344.32 | $56,017.22 | $1,176,361.54 |
| | | | | | | | |
| Interest Rates 1 year ago we could have locked in at 2%. We are now at 3.8% (Increase of more than $60,000) | | | | | | | |